'Atiqot 90, 2018

THE CHALCOLITHIC AND EARLY BRONZE AGE IB SITE OF BEQO'A

AMIR GOLANI, BENYAMIN STORCHAN AND ANNA EIRIKH-ROSE

INTRODUCTION

Rescue excavations carried out near Moshav Beqo'a during 2008–2009 revealed a proto-historic site with remains from the Chalcolithic and the late Early Bronze I periods (Fig. 1; 192450–555/637225–323).[1] The site was discovered during archaeological inspection of modern earthmoving activities, initiated during the development of a housing project, to expand the modern settlement. The excavations were carried out along the planned path of a circular road within the projected expansion. Several small excavation areas (A–F) were opened along the path of the projected roadway, primarily where

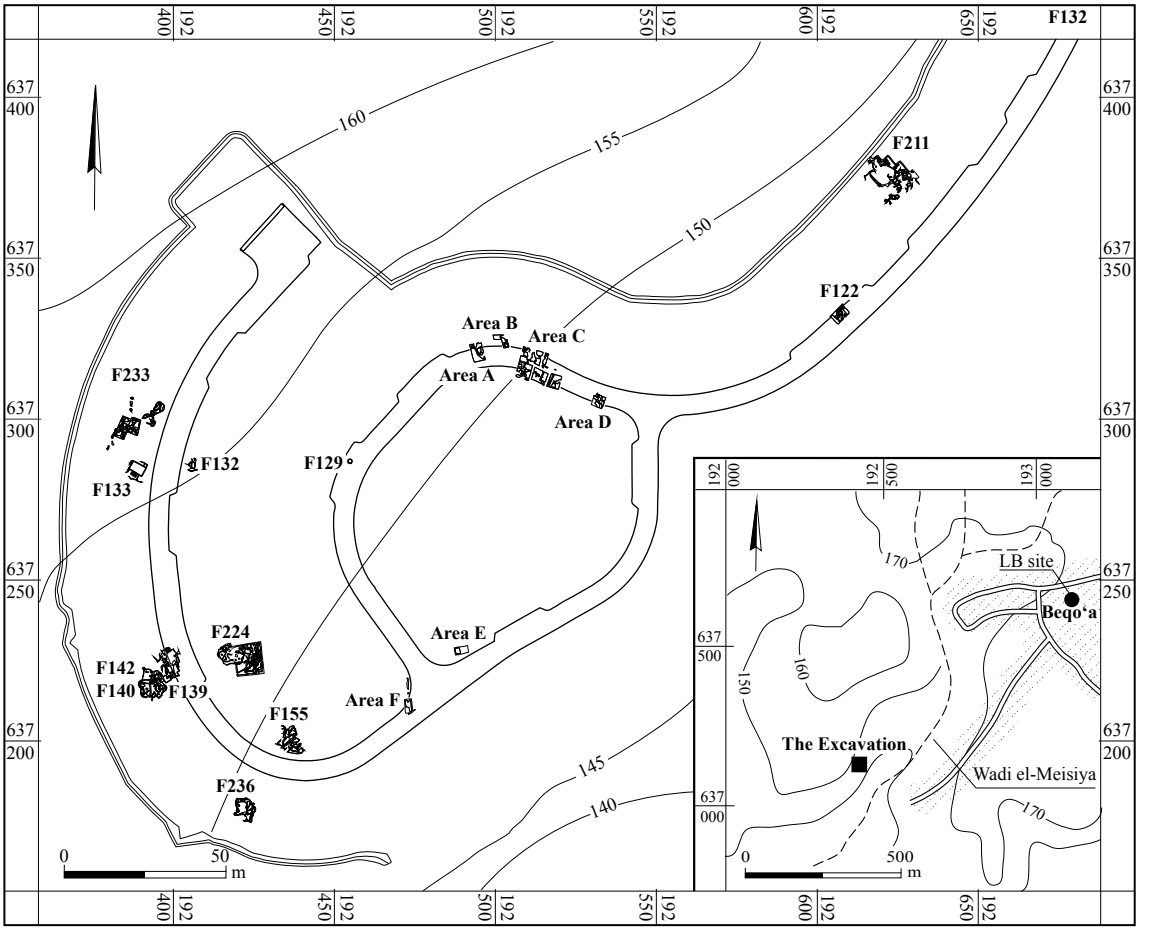

Fig. 1. Location map of Beqo'a and the excavation areas.

archaeological remains were revealed during construction activity.

The site is located at the base of a moderate eastern-facing slope, which descends to Wadi el-Meisiya (Fig. 1). To the north of the excavated area, a large unnamed archaeological site is located on a low hill. Excavations in the immediate region uncovered several rock-cut features consisting of rock-hewn tombs, winepresses and quarries that may be associated with this site, and date from Iron Age II and the Persian, Hellenistic and Roman–Byzantine periods (Golani 2011; Kogan-Zehavi 2016). Additional excavations in the immediate vicinity uncovered a Late Bronze Age settlement within the boundaries of Moshav Beqoʿa (Fig. 1).[2] Prior to the current excavation, mechanical trenches were dug by the IAA in the southern and eastern portion of the proto-historic site in order to determine its extent.

THE EXCAVATIONS

The excavations revealed two major occupation periods: the Chalcolithic and Early Bronze Age. In one area (Area C), three distinct strata were identified: the earliest, Stratum III, dates from the Ghassulian phase of the Chalcolithic period, and the two subsequent Strata II–I date from late EB I. The Chalcolithic remains were found directly on a sterile alluvial layer—the basal level of the site. The other excavation areas revealed remains from one or both periods, but the lack of physical connection prevents a correlation between the areas.

AREA A (Plan 1)

Area A consists of one excavation square, which was opened after modern earthmoving activities exposed several large stones immediately beneath the dark brown alluvial topsoil. Manual excavation revealed that the modern construction had severely damaged occupation remains from the Early Bronze Age, but a wall and at least two pits that were dug into the sterile light brown marl were identified (Plan 1; Fig. 2). These features were found in a layer that included ceramics from the

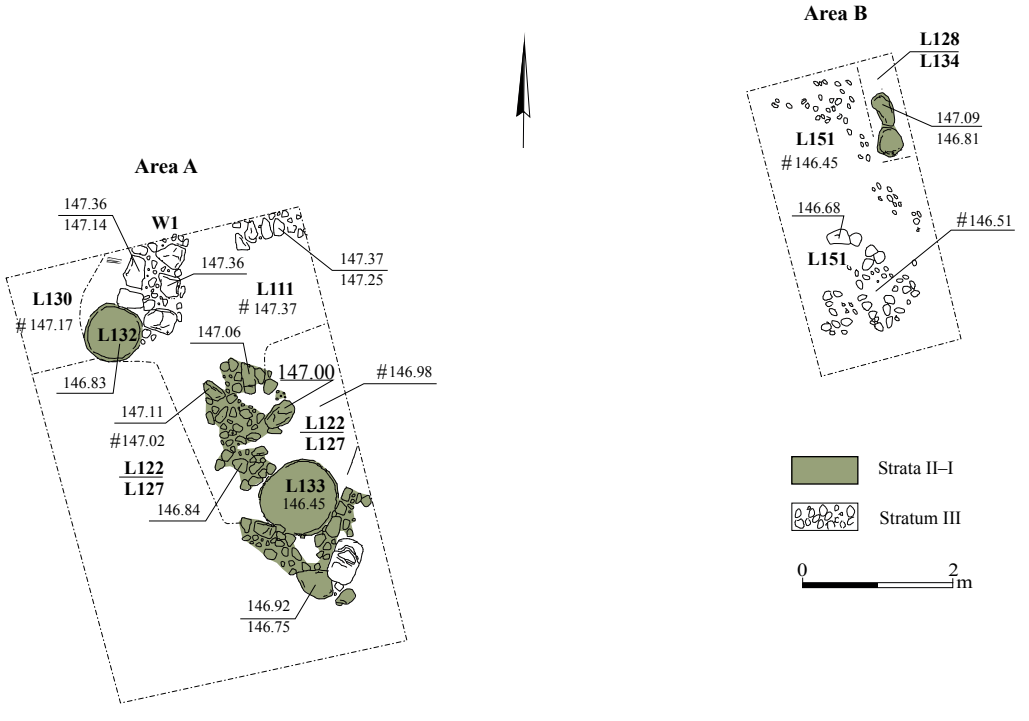

Plan 1. Areas A and B.

Chalcolithic period, representing the remnants of a surface (L111, L122/127, L130) situated on the sterile, basal, dark brown alluvium. All the pits contained stones, ceramics and flint in a dark brown earth matrix. Two pits (L132, L133) contained EB I ceramics. The southern pit (L133) was partially bordered by a single course of small stones. The northern pit (L132) cut into an earlier wall (W1) that dates from the Chalcolithic period (Stratum III). The pits date from EB I, but it is unclear whether they belong to Stratum I or II, both of which date to late EB I. Between the two excavated pits was a scatter of small and medium-sized stones, which may indicate the presence of another, unexcavated pit.

Fig. 2. Area A, looking south; the Chalcolithic W1 is in the foreground, the Early Bronze Age Pit 133 is in the upper left corner.

AREA B (Plan 1)

One half square was opened between Areas A and C, in a space that had not been disturbed by modern construction. This was to establish an undisturbed stratigraphic sequence from the alluvial topsoil down through the archaeological levels. The excavation revealed a topsoil cover overlying an accumulation of stratified EB I debris (L128) that may be associated with either Stratum I or II. A beaten-earth surface (L151), including numerous small stones, was uncovered 1.14 m below the modern surface (Fig. 3). The ceramic material on L151 dated it to the Chalcolithic period (Stratum III). Due

Fig. 3. Area B, looking east; the Chalcolithic stone surface is on the right and two large stones indicating an EB I occupation are on the left.

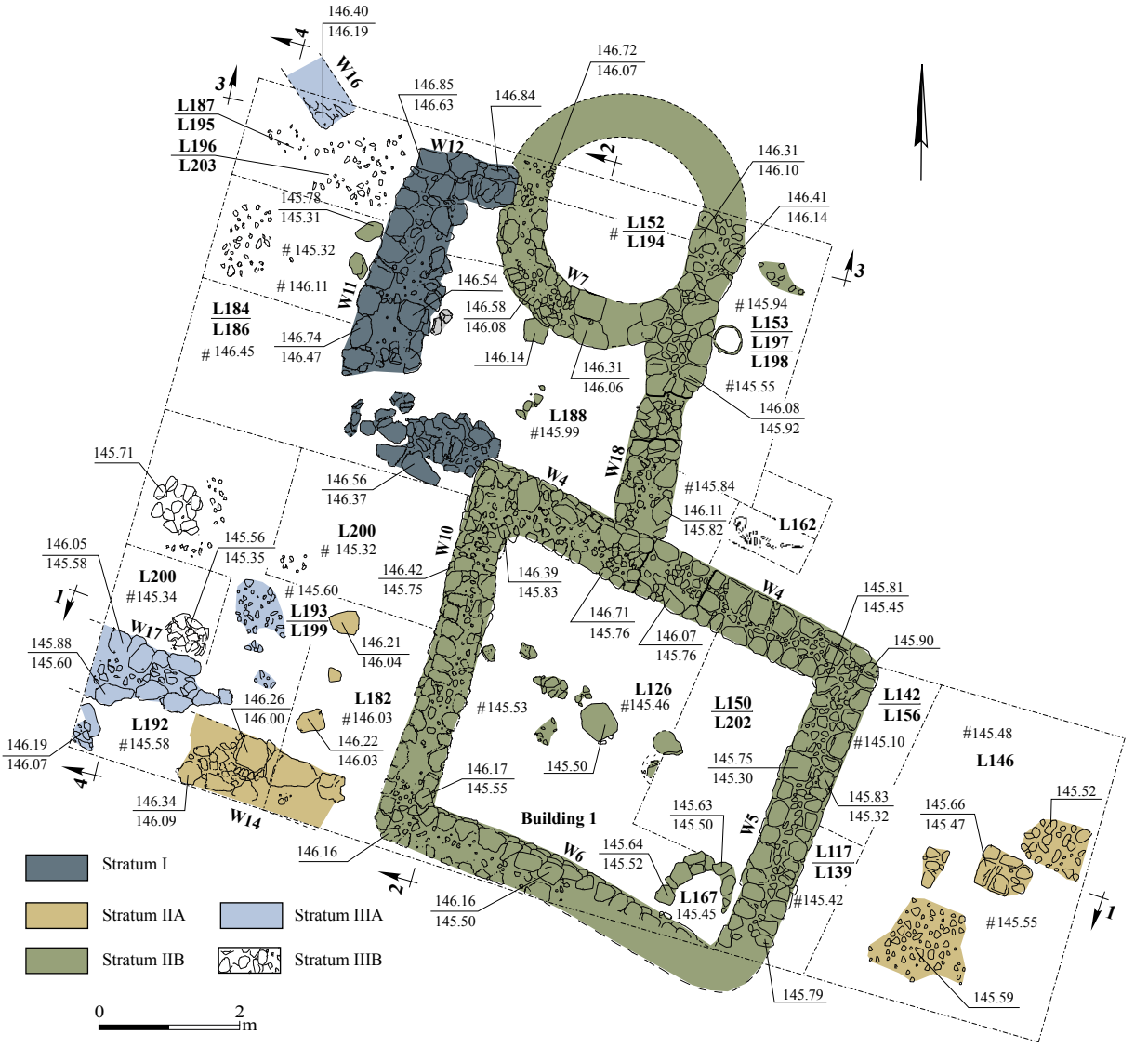

Plan 2. Area C, Strata III–I, plan and sections (on next page).

to time limitations, excavation in this area did not reach the sterile basal marl upon which the settlement was founded.

AREA C (Plan 2)

Area C (over 100 sq m) was excavated in proximity to and southeast of Area B (Fig. 1). Much of the dark brown topsoil in this area had been already removed by mechanical means prior to excavation, exposing the top of a light brown-gray earth matrix, stone walls and numerous ceramics of EB I.

An examination of the basal levels in Areas A and D (see below) revealed both levels to have been at a slightly higher elevation than that of

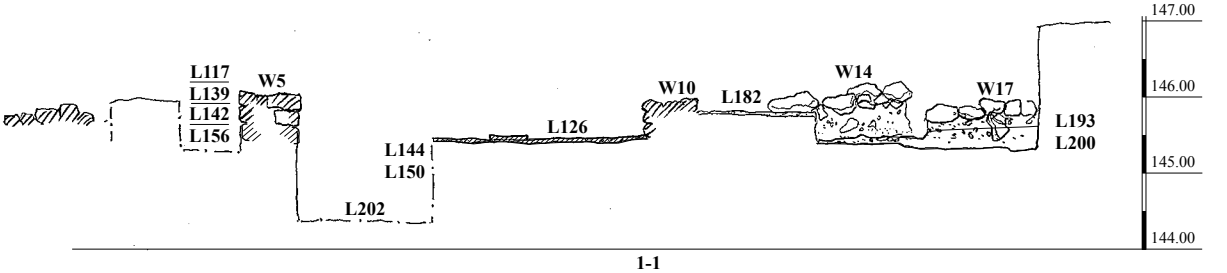

1-1

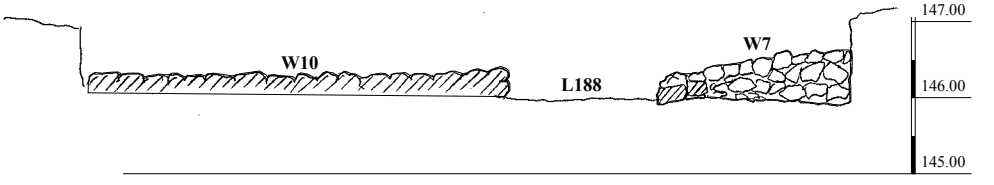

2-2

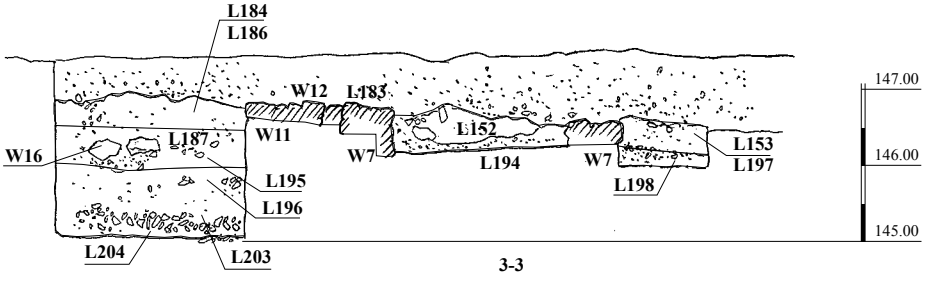

3-3

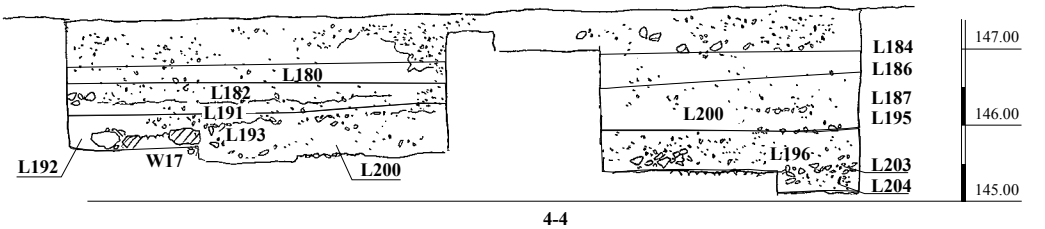

4-4

Area C, which was positioned between them. This indicates that the habitation horizons in Area C were built within a shallow topographic depression. Three main occupation strata were identified in Area C: Stratum III (the earliest) to Stratum I (the latest).

Stratum III: The Chalcolithic Period

This stratum was exposed in five deep, various-sized probes (Plan 2). Two occupation phases were revealed.

Stratum IIIB.— The earliest Chalcolithic remains were revealed in the western portion of the excavated area. They were found on sterile alluvial marl overlaid by a thick fill of earth and small stones. A very limited exposure of this earliest phase revealed a beaten-earth surface with no architectural remains. Remains of this phase consisted of a surface composed of a thick fill of small stones and ceramic material (L196/203; Figs. 4, 5; Plan 2: Sections 3–3, 4–4).

In the southwestern portion of the excavated area, what appeared to be the same beaten-earth surface was revealed (L200). This surface included a concentration of crushed ceramic vessels (Figs. 6; 20:3, 6, 9, 10, 14, 17, 18, 24; 21:2; 22:7, 9, 11; 23:7, 8; Plan 2: Section 4–4); however, these may have been the contents of a pit from Stratum IIIA that was dug into Stratum IIIB.

In the eastern part of the building assigned to Stratum II (see below), a deep probe below the floor (L144/150/202; Plan 2: Section 1–1) revealed a thick Chalcolithic accumulation on sterile alluvial marl (L150/202). To the east of the building, the excavation reached the top of the Stratum IIIB deposit (L142/156), but no clear surface was identified.

Stratum IIIA.— The second phase of the Chalcolithic period was evident from limited architectural remains and several associated surfaces. In the northwestern part of the excavated area, a surface (L187/195; Plan 2: Sections 3–3, 4–4) was revealed to be associated with a wall (W16). The wall, which protruded from the northern balk, was preserved one course high and was built of two rows of medium-sized fieldstones with smaller chinking stones in between (Fig. 5).

Fig. 4. Area C, Stratum IIIB surface (L196), looking southwest.

Fig. 5. Area C, looking northwest; a thick accumulation of Chalcolithic remains (L196/203, L187/195) is seen at the bottom, in the center is W16 of Stratum IIIA.

Fig. 6. Area C, Stratum IIIB ceramic concentration on a surface (L200), looking south; at the top, the stones of Stratum IIIA W17 are seen.

In the southwestern portion of Area C, another small wall segment (W17) was exposed, similarly built of two rows of large fieldstones and preserved one course high. A beaten-earth surface (L193/199) to the north of W17 covered an earlier surface (L200 of Stratum IIIB; Plan 2: Sections 1–1, 4–4). To the south of W17, another beaten-earth surface (L192) was exposed at the base of the wall. In the northeastern portion of Area C, a Stratum IIIA surface (L198; Plan 2: Section 3–3) was exposed below a Stratum II surface (L153/197) associated with Stratum II W7.

Stratum II

Stratum II (Plan 2) was dated to a late phase of EB I and includes two occupation phases (A and B). No connection was identified between the Stratum III occupation and that of Stratum II. The main feature of Stratum II was a rectangular building with rounded outer corners (Building 1; Fig. 7). Adjacent to this building, half of a circular structure, probably to be interpreted as a granary, was exposed (Fig. 8; see Golani and Yannai 2016).

Stratum IIB.— The complete Building 1 associated with this phase consists of four walls (W4, W5, W6, W10) enclosing a roughly square room (outer measurements 6.00 × 5.25 m, interior space of 18 sq m), with at least two rounded outer corners. The walls, all of similar construction, were built of two parallel rows of medium- to large-sized stones with smaller chinking stones in between, and were preserved to a maximum of three courses. On the northern

Fig. 7. Area C, Stratum II, Building 1, looking west; note the doorway in the northern wall and the pillar base in the center of the room.

Fig. 8. Area C, Stratum II, the circular structure (W7; lower center) and Building 1 (upper left), looking south-southwest; W11 of Stratum I is on lower right.

side of the building (W4), an entranceway was found. Across from the entranceway, two large flat stones, which may have served as pillar bases to support a roof, were found in the debris embedded in the beaten-earth floor (L126). There may have been a second entrance in the northeastern corner of the building (W5), where a gap in the lower foundation course was observed (Fig. 9). In the southeastern corner of the building, a circular stone-built installation was uncovered (L167; Fig. 9).

Within the building, the beaten-earth floor was overlaid by debris (L126), which slightly sloped down to the east. The floor was reached by stepping down from the threshold of the entrance in W4, and lies slightly below or at the very base of the walls of the building. The remains of another beaten-earth surface (L117/139) were immediately to the east of W5 and were associated with its base.

A circular structure, perhaps for storage, was revealed to the north of Building 1 (Fig. 8). Its curved wall (W7) was preserved to a maximum height of four courses, and was built of two rows of medium-sized fieldstones with smaller chinking stones in between. At the base of W7, within the structure, a beaten-earth floor was identified (L152/194). No entrance to this structure was found; it may have been located in its northern portion, which was left unexcavated.

Building 1 and the circular structure were connected by W18, with an entrance through its middle. This wall was also built of two rows of large- to medium-sized stones and smaller chinking stones, and was preserved to a maximum height of two courses. At a later stage, possibly Stratum IIA (see below), the entranceway was blocked (Fig. 10). An unexcavated beaten-earth surface at the base of L188, to the west of W18, was also connected to the bases of the circular structure and Building 1 (Plan 2: Section 2–2). To the east of W18 was an additional beaten-earth surface (L153/197),

Fig. 9. Area C, Stratum II, the eastern portion of Building 1, looking southeast; note the gap in the lower course of W5 (left), suggesting a blocked-up entranceway, and the circular installation (L167) in the southeastern corner (upper right).

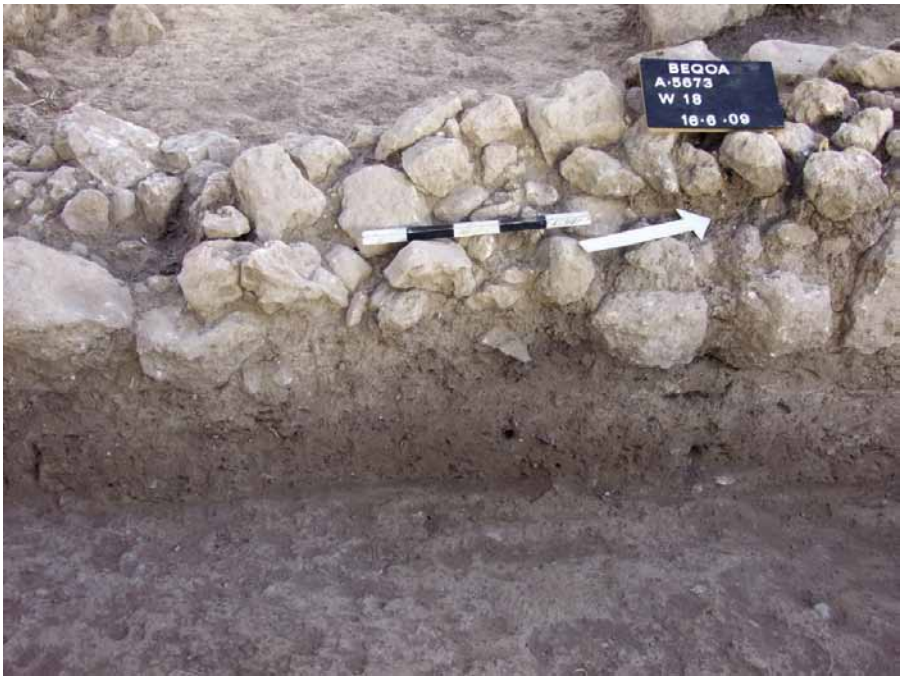

Fig. 10. Area C, Stratum II, W18, looking west; note the blocked entranceway.

Fig. 11. Area C, Stratum II, a holemouth jar on L153/197, looking northwest; the stones of W18 are at top.

Fig. 12. Area C, Stratum II, a complete drop-shaped juglet (marked by the arrow) on L182, looking east; the uppermost course of W10 is seen at top.

upon which a nearly complete ceramic holemouth jar was found (Figs. 11; 26:1).

Stratum IIA.— The slightly later building phase of Stratum II was characterized by the continuation of the same building plan, with the addition of a few walls and surfaces.

To the east of W5 of Building 1, a beaten-earth floor at the base of L146 was composed of small stones and a concentration of medium-sized stones that may be the remnant of a wall. Lack of time precluded further excavation in this area.

Building 1 underwent some structural changes during this phase. An additional wall (W14) was built perpendicular to Building 1, continuing the line of W6. Wall 14 was slightly thicker than W6, and was built of two parallel rows of large-sized stones with smaller chinking stones. This wall does not abut the corner of W10 and W6, and also appears to have been cut at its western end. On the northern side of W14, at the base of the wall, a beaten-earth surface was found at the base of L182 that ran up to the uppermost course of W10 (Plan 2: Section 1–1). Upon this surface was found a complete drop-shaped juglet (Figs. 12; 27:5).

At the end of Stratum IIA, Building 1 and all its associated structures appear to have been deliberately abandoned. All the entrances were found blocked by stones (Fig. 10). The main entranceway into Building 1 in W4 was deliberately blocked off, and the stone threshold with a hewn socket was taken out and positioned on its side, blocking the entrance (Fig. 13).

Stratum I (Plan 2)

Like Stratum II, Stratum I dates from late EB I and appears to represent a new occupation. During the Stratum I occupation, the architectural elements of Stratum II were still apparent. The characteristic feature of the Stratum I occupation is the dismantling of all previous remains and the addition of a large fill of soil and stones found in Building 1 and to its north. The only architectural feature associated with Stratum I comprises W11 and W12, found in the northwestern portion of the excavated area (Fig. 8; Plan 2) and a concentration of stones, possibly the disturbed remnants of a wall, south of W11. The walls were built of one row of large- to medium-sized fieldstones, and were preserved one course high. They may have functioned as retaining walls for a large fill of stones that was found dumped in the region to the east of the wall and covering the circular structure (W7). To the west of W11, a beaten-earth surface (L184/186) was revealed at its base.

Fig. 13. Area C, Stratum II, the main entranceway into Building 1, blocked, looking north; note the large stone at right with three depressions for the door socket.

Post Stratum I Burials

The remains of three primary burials were revealed in Area C during the course of excavation: two were found inside Building 1 and one was found to its north.[3] The burials within the building were extremely fragmented. One of these was found atop W6. The body was laid on an east–west axis, on its right side, with the head in the west facing south. This individual was older than 19 years of age and of an indeterminate sex. The second burial was found within the building, nearly a meter above the floor. This individual was interred lying on its back on an east–west axis, with the head facing the west. The very fragmentary remains of this burial do not allow sex or age determination, but the bones are clearly not those of a child. Both these burials post-date the Stratum II occupation and probably that of Stratum I as well, though no burial goods could be associated with them. The third burial was preserved better than the other two. The skeleton was that of a female, aged 20–30 years, lying on her right side, on an east–west axis, with her head in the west, facing south (L162; Fig. 14). No burial goods were found with this burial. To the north and adjacent to the third burial was a dark rectangular area of earth that suggests an additional intrusive

Fig. 14. Area C, Bedouin burial, looking west; W4 of Building 1 is in the upper left, and W18 is in the upper center.

burial (not excavated). Such burials, often found at archaeological sites and cutting deeply into earlier archaeological remains, are a well-known phenomenon and are usually associated with Bedouins.

AREA D (Plan 3)

Area D comprised one excavation square positioned c. 10 m to the southeast of Area C (Fig. 1). As in Area A, Area D was opened after modern earthmoving activities had removed part of the topsoil and exposed a few large stones. Excavation revealed the remains of a wall (W8) consisting of two parallel rows of large fieldstones. An associated surface (L121/125), composed of numerous packed small stones (Fig. 15), was found running up to the north of this wall directly upon the sterile alluvium. The ceramic material on and within this surface dates it to the Chalcolithic period. A small portion of another beaten-earth surface (L131) was found to the south of W8. A probe in the northeastern corner of the square revealed the outline of a large pit (L136) dug into the light brown basal alluvium. Pit 136 also yielded ceramics and flint artifacts from the Chalcolithic period (see Khalaily, this volume).

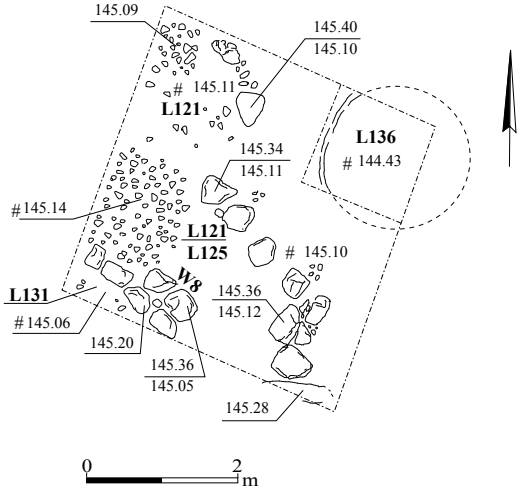

Plan 3. Area D.

AREAS E, F (Plans 4, 5)

Areas E and F were located approximately 90 m to the south of Areas A–D (Fig. 1). They consist of two half squares that were positioned where archaeological inspection suggested possible ancient building remains.

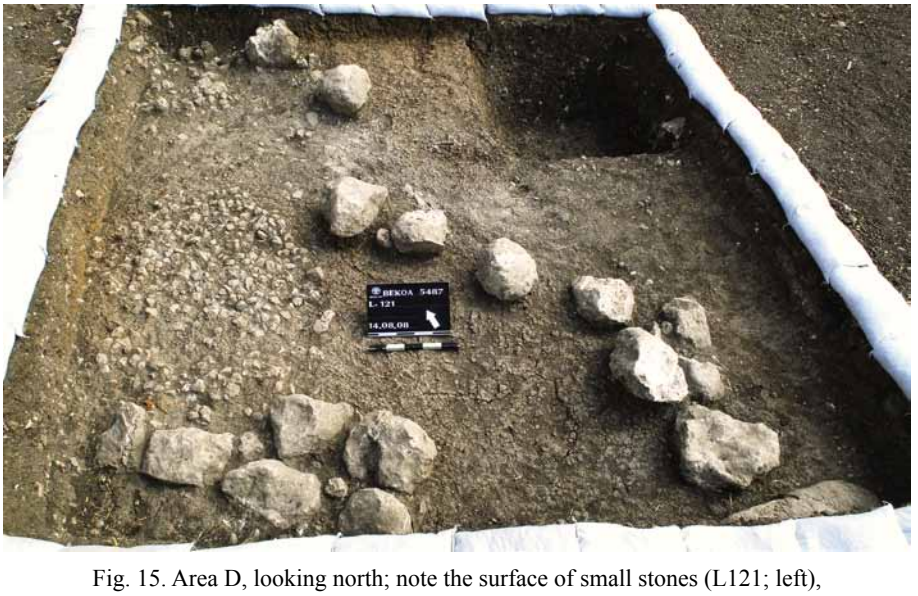

Fig. 15. Area D, looking north; note the surface of small stones (L121; left), and the partially excavated pit (L136; upper right).

Area E (Plan 4; 4 × 2 m) revealed a surface composed of a large, flat stone surrounded by smaller stones (L103/106), set on light brown sterile marl (L115; Fig. 16).

Area F (Plan 5; 4 × 2 m) was located 20 m southwest of Area E (Fig. 1). Excavation in this area revealed the remains of a field wall consisting of one row of medium-sized stones, in an north–south orientation, on top of the sterile basal marl.

The very limited amount of diagnostic ceramic material recovered from both these areas does not permit a clear chronological dating for any of these features.

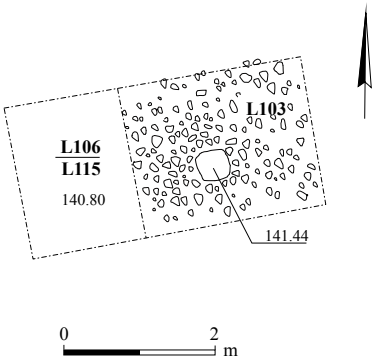

Plan 4. Area E.

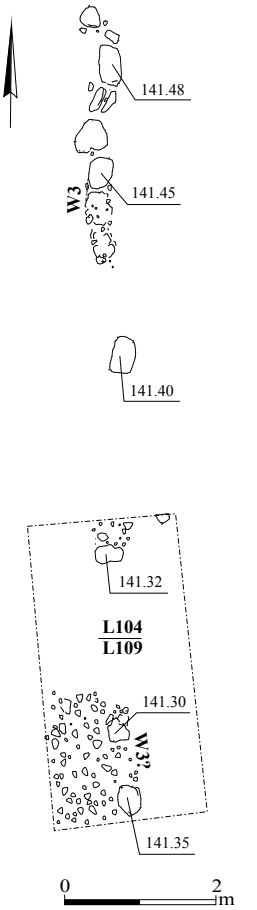

Plan 5. Area F.

Fig. 16. Area E, looking south; note Surface 103/106 surrounding a single, large stone.

FEATURE 122 (Plan 6)

Approximately 60 m northeast of Area D, the remains of a cave were excavated after mechanical excavation revealed a concentration of bones and ceramic material (Fig. 1). These appear to have been associated with a cave whose roof was removed by a bulldozer.

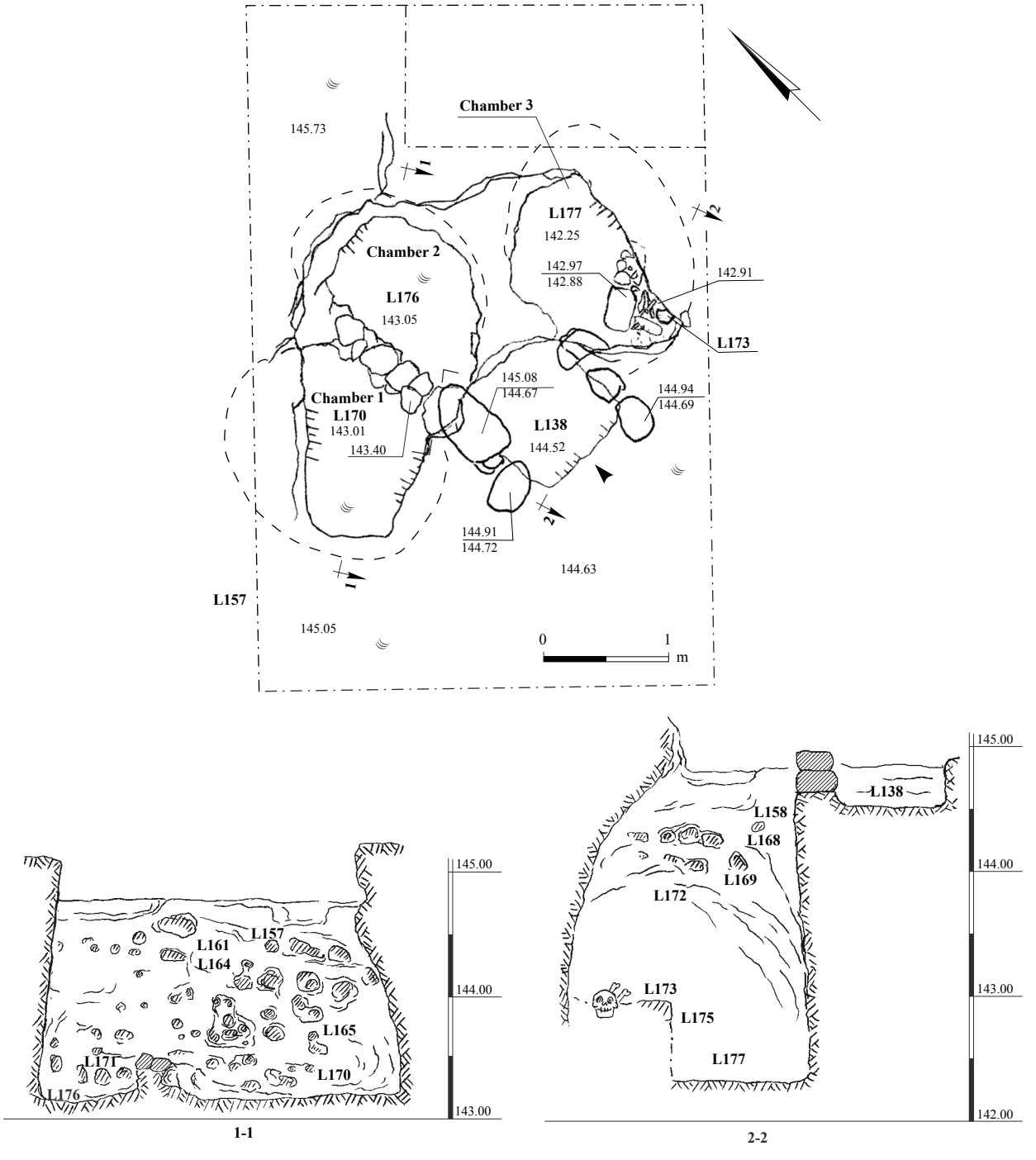

Plan 6. Burial Cave F122, plan and sections.

Fig. 17. Burial Cave F122 during initial stages of excavation, looking northeast; note the two parallel lines of stones that outline the entrance into the cave.

The pottery consisted of numerous ceramic fragments and a small juglet (Fig. 28:11) dated to the Persian period. Similar juglets dated to the Persian period (sixth–fourth centuries BCE) are known throughout the country, and are especially common in the central mountainous area of Israel (Stern 1982:122, Figs. 186, 187). The bones and the pottery suggest that a severely damaged Persian burial was in the cave, as the finds were retrieved in complete disarray. Further manual excavation did not reveal additional remains from this period.

The outline of an irregular-shaped rock-cut tomb with an entrance was revealed at the southern part of the cave hollow. The entranceway (L138) was delineated by two parallel rows of large- to medium-sized stones that led into the cave with a descending step (Fig. 17). This step lead to three deep, rounded chambers (Plan 6: Chambers 1–3; Fig. 18) that were separated by partitions hewn out of the chalkstone bedrock (Plan 6: Section 1–1). The chambers were completely filled with debris. The upper portion of the earth and stone debris was mixed, and included ceramic material of both the Chalcolithic and EB I periods. The lower portion of the fill, near the bedrock floor (L170, L176, L177) contained exclusively Chalcolithic ceramics.

Chambers 1 and 2 were separated by a narrow wall hewn from the bedrock that was overlaid by several stone courses. Chamber 3 was separated from Chamber 2 by a thin partition hewn out of the bedrock (Plan 6). Chamber 3 was hewn to a greater depth than Chambers 1 and 2 (Plan 6: Section 2–2).

Within Chamber 3 were the remains of at least one primary burial dated from the Chalcolithic period (see n. 3). The burial was adjacent to the eastern wall of the chamber, and was outlined by several stones. The skeleton was found articulated in a flexed position on its right side, lying on a north–south axis with the head to the north and facing west. Anthropological investigation determined the deceased to have been a female between 20–30 years of age.

Fig. 18. Burial Cave F122 at the end of excavation, looking south; note the stepped entrance into the cave (upper center).

Fig. 19. Burial Cave F122, the southern wall of Chamber 3, looking south.

Meticulous sifting of the area near the burial yielded a small circular bead made of shell (Fig. 29:10). The burial was found nearly half a meter above the bedrock floor of the chamber (L173; Plan 6: Section 2–2), suggesting that this interment was a reuse of the cave.

The northern bedrock face of Chambers 1 and 2 was pockmarked with numerous small niches (Figs. 18, 19), between 10–15 cm in diameter and 5–10 cm deep. These niches may have been formed as a result of natural processes. Alternatively, they may have been

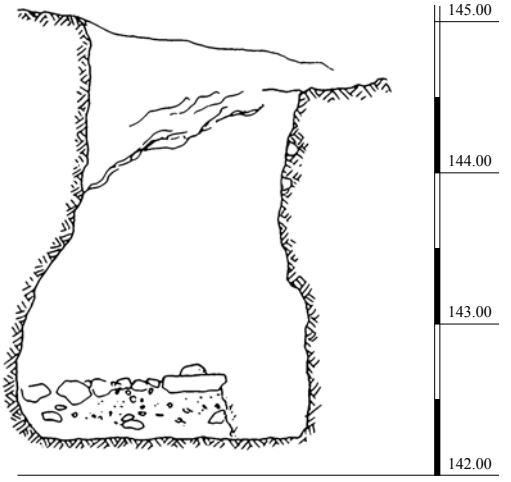

Plan 7. Feature 129, section.

intentionally hewn, but their purpose remains unknown.

FEATURE 129 (Plan 7)

During the course of Kogan-Zehavi's excavation (Kogan-Zehavi 2016), a deep rock-hewn pit was excavated (Fig. 1). The entrance shaft, 1.3 m in diameter, was cut 1.2 m into the bedrock and slopes moderately down to the northeast. After 1.2 m, the circular, vertical shaft widens to form a roughly circular chamber, 1.9 m in diameter and 1.45 m in height. A compacted fill of earth and small to medium-sized fieldstones was revealed approximately 30 cm above the stone floor. A small quantity of Chalcolithic and EB I ceramic material was found in the fill and on the stone floor. These finds suggest that the pit was open at the same time as the nearby Chalcolithic and EB I occupations at Beqo'a.

THE FINDS

All loci from stratigraphic contexts such as floors and surfaces were sifted during excavation through a 1 × 1 cm mesh. The pottery was examined, sorted and registered, and material from loci designated for restoration was kept in its entirety, then sorted again after ceramic restoration was completed. During the sorting process, all non-diagnostic body sherds were discarded, while all rims, bases, handles and other sherds indicating a specific form, manufacture or decorative technique were kept. Subsequently, during detailed examination and formulation of the stratigraphy, the position and content of the various loci whose pottery had been restored were re-examined. Ceramics from loci that could be clearly associated with the specific occupation phases described above were retained, creating a ceramic assemblage compiled from secure loci for each of the occupation strata.

Chalcolithic ceramic and groundstone objects associated with Stratum III are presented in Figs. 20–24. Late EB I pottery associated with the Stratum II occupation is presented in Figs. 25, 26, 27:1–11. A very limited repertoire associated with Stratum I, also dated from the late EB I, is shown in Fig. 27:12–17. The ceramics and other material from F122, the Chalcolithic burial cave, are presented in Figs. 28, 29.

STRATUM III: CHALCOLITHIC PERIOD (Figs. 20–24)

The Chalcolithic pottery of Beqo'a belongs to the Ghassulian-Be'er Sheva' culture as defined by Amiran (1969:22) and Gilead (2011) that is paralleled at most Late Chalcolithic sites in Israel. Most known types from the Ghassulian-Be'er Sheva' cultural repertoire are represented at the site.

Clays and Tempers

Coarse and fine fabric clays are the two main types of raw materials present in the ceramic repertoire from Beqo'a. Coarse fabric clay is very pale brown or occasionally reddish, and is characterized by a high frequency of medium-sized, dark gray grits of calcite and flint. Most vessels at the site are of this fabric. Fine-fabric clay is very well-levigated, whitish in color, and with very few small (gray and black) grits. This fabric was utilized mostly in V-shaped

bowls (Fig. 20:5–19). In addition, five sherds of the so-called Cream Ware were recovered (not illustrated). The term Cream Ware was used already during Macalister's excavation at Gezer (Macalister 1912; Amiran 1955). Thin-walled vessels of fine fabric and well-levigated clay are found mostly in the Be'er Sheva' region (Garfinkel 1999), and petrographic studies have shown the clay of these vessels to have originated from Eocene chalks in the Be'er Sheva' region (Gilead and Goren 1995), suggesting that these vessels were imports.

Decoration and Additional Features of the Beqo'a Assemblage

The decoration of the Beqo'a assemblage mostly consists of red slip (e.g., Fig. 24:5, 7), and includes painted lines, such as the typical "lipstick" decoration on bowl rims (Figs. 20:9–11). Some applied and impressed rope decoration (Fig. 24:9) is found on rims of large open vessels, holemouth jars and pithoi. An incised decoration of three lines with dots between them was applied to a store jar from F122 (Fig. 29:8), similar to a single (non-continuous) incision appearing on Chalcolithic pottery (see, for example, Scheftelowitz 2004), a decoration which some interpret as a potmark (e.g., Avrutis 2012).

Typology

The Beqo'a typology follows that of Commenge-Pellerin (1987; 1990; Commenge 2006) with additional reference to Garfinkel (1999) and Lovell (2001). The assemblage comprises 422 morphologically diagnostic ceramic forms—411 rim sherds and 11 other types—that come from definite Stratum III contexts, including the lower levels of F122, which is interpreted as a Chalcolithic burial cave. Churns were recognized based primarily on their handles. Cornets and chalices were identified by their bases. The 411 rim sherds were divided into 11 types with several subtypes. Together, the ceramic assemblage can be classified as open forms, closed forms and miscellaneous (Table 1).

Open Forms

Bowls (Fig. 20).— Bowls are a common vessel type, comprising 51% of the assemblage (n = 214). The majority of the bowls are V-shaped.

Small Rounded Bowls (Fig. 20:1–4).— Four sherds of small, rounded bowls were found. These are undecorated, made of coarse fabric and have relatively thick walls.

V-Shaped Bowls (Fig. 20:5–19).— V-shaped bowls constitute the majority of the bowls, and are one of the main components of Ghassulian ceramic assemblages in the southern Levant. They are thought to have been standard eating and drinking dishes (Gilead and Goren 1995). Several small V-shaped bowls bear string-cut bases (not illustrated). The Beqo'a V-shaped bowls have been divided in two subtypes: small- and large-rim diameters.

Small V-shaped bowls (Fig. 20:5–16) have a rim diameter of less than 14 cm, and are the most common vessel (34%; n = 142). They show signs of being turned on a slow wheel. Most bear red "lipstick" decoration on the rim (Fig. 20:9–11).

Large V-shaped bowls (Fig. 20:17–19) have a rim diameter of 15–20 cm, and are less common (7%; n = 30). Most have a straight cut or pointed rim, and the majority are undecorated.

Flared-Rim Bowls (Fig. 20:20–25).— Bowls with flaring, everted walls are relatively thick. Their rims are rounded or straight-cut, and are sometimes decorated with a red stripe (Fig. 20:23) or finger impressions, changing the rim into a rope-like style (Fig. 20:25). This type of bowl often constitutes the upper part of a chalice, but when the lower part is missing, identification cannot be definitive. Similar bowls are known from other Chalcolithic sites (Garfinkel 1999: Type A3).

Table 1. Vessels Found in Loci

Locus		112	120	121	122	126	125	127	130	136	138	142	148	150	151	156	157	158	159	161	165	168	169
Bowl	Small rounded	-	-	-	-	-	-	-	-	-	-	1	2	-	-	-	-	-	-	-	-	-	-
	V-shape	3	1	1	2	-	1	-	-	-	3	6	-	-	8	3	1	2	6	-	5	4	3
	Large V-shape	-	-	1	1	-	-	-	1	-	-	-	-	-	2	-	-	-	-	-	-	-	-
	Flared rim	1	-	-	3	-	-	-	-	1	1	1	-	1	3	-	-	-	2	-	1	-	2
	Inverted rim	2	-	-	1	-	-	-	-	-	3	-	-	-	-	1	-	-	-	-	1	1	-
	Square-cut rim	-	-	-	1	-	-	-	-	1	1	-	-	-	1	-	-	-	-	-	-	1	-
	Ledge-rim	-	-	-	2	-	-	-	-	-	-	-	-	-	-	-	-	-	1	-	-	-	-
	Shallow, large	-	-	-	1	-	-	-	-	-	-	-	-	-	-	-	-	-	-	-	-	-	-
Basin		1	-	-	-	-	-	-	-	-	3	-	-	-	-	-	-	-	-	-	-	-	-
Chalice		2	-	-	-	-	-	-	-	-	-	-	-	-	-	-	-	-	-	-	-	-	-
Cornet		1	-	-	-	-	-	-	-	-	-	-	-	-	-	-	-	-	-	-	-	-	-
Holemouth jar	Small	-	-	-	1	-	-	-	-	-	4	-	-	-	-	-	-	-	-	-	1	-	-
	Pointed rim	3	-	-	-	-	-	-	-	-	2	1	1	-	2	1	-	-	1	-	1	2	1
	Thickened rim	3	-	-	-	-		1	1		-	-	-	2	-	-	-	1	3	-	1	1	-
	Square-cut rim	-	-	-	-	-	-	-	-	-	3	-	-	-	-	-	-	-	2	-	-	1	1
	Upright rim	-	-	-	-	-	-	-	-	-	-	-	1		1	-	-	-	-	-	-	-	-
Holemouth pithoi	Outward-thickened rim	2	-	-	-	1	-	-	-	1	1	-	-	-	2	-	-	-	-	-	-	-	-
	Hammer-rim	-	-	-	-	-	-	-	-	-	-	1	-	-	-	-	-	-	-	-	-	-	-
Jar	Low-necked	-	-	-	1	-	-	-	-	-	4	1	-	-	2	3	1	-	1	-	2	-	-
	High-necked	1	-	-	-	-	-	-		1	1	-	-	-	-	-	-	-	1	-	-	-	-
Churn		1	-	-	-	-	-	-	-	-	1	-	-	-	-	-	-	-	-	2	-	-	-
Ossuary		-	-	-	-	-	-	-	-	-	-	-	-	-	-	-	-	-	-	-	-	-	-
Cream ware		-	-	-	-	-	-	-	-	-	-	-	-	-	-	-	-	-	-	-	-	-	-
Disk		-	-	-	-	-	-	-	-	-	-	-	-	-	-	-	-	-	-	-	1	1	-
Total		*20*	*1*	*2*	*13*	*1*	*1*	*1*	*2*	*4*	*27*	*11*	*4*	*3*	*21*	*8*	*2*	*3*	*17*	*2*	*13*	*11*	*7*
Total (%)		*4.66*	*0.23*	*0.47*	*3.03*	*0.23*	*0.23*	*0.23*	*0.47*	*0.93*	*6.29*	*2.56*	*0.93*	*0.70*	*4.90*	*1.86*	*0.47*	*0.70*	*3.96*	*0.47*	*3.03*	*2.56*	*1.63*

Table 1. (cont.)

Locus		170	171	172	173	174	175	177	178	179	187	192	193	195	196	198	199	200	202	203	204	205	206	*Total*
Bowl	Small rounded	-	1	-	-	-	-	-	-	-	-	-	-	-	-	-	-	-	-	-	-	-	-	*4*
	V-shape	1	-	1	3	-	9	17	4	5	-	3	2	-	6	3	2	16	4	2	8	6	1	*142*
	Large V-shape	-	-	2	-	-	4	1	-	-	-	-	-	1	-	1	1	11	1	-	-	3	-	*30*
	Flared rim	-	-	1	-	-	1	-	-	2	1	-	-	2	2	1	-	4	4	-	1	3	-	*38*
	Inverted rim	-	-	-	-	-	-	-	-	-	-	-	-	-	1	-	-	-	-	-	-	-	-	*10*
	Square-cut rim	-	-	-	1	-	1	-	-	-	-	-	-	-	3	-	-	3	-	1	-	1	-	*15*
	Ledge-rim	-	-	-	-	-	-	-	-	-	-	-	-	1	1	-	-	2	-	1	-	3	-	*11*
	Shallow, large	-	-	1	-	-	-	-	-	-	-	-	-	-	-	-	-	1	1	1	-	-	-	*5*
Basin		-	-	-	-	-	-	-	-	-	-	-	-	1	-	-	-	-	1		1	-	-	*7*
Chalice		-	-	-	-	-	-	-	-	-	-	-	-	-	-	-	-	-	-	-	-	-	-	*2*
Cornet		-	-	-	-	-	-	-	-	-	-	-	-	-	-	-	-	-	-	-	-	-	-	*1*
Holemouth jar	Small	-	-	-	-	-	-	-	-	-	-	-	-	-	-	-	-	-	-	-	-	-	-	*6*
	Pointed rim	-	-	1		1	-	2	-	-	2	1	-	-	-	1	1	1	-	1	6	3	-	*35*
	Thickened rim	-	-	-	-	-	-	1	-	-	-	1	-	-	-	2	-	-	-	-	-	-	-	*17*
	Square-cut rim	-	-	-	-	-	-	-	-	-	-	-	4		1	-	-	4	-	-	-	3	-	*19*
	Upright rim	-	-	-	-	-	-	1	1	-	-	-	-	-	-	-	-	1	-	-	-	-	-	*5*
Holemouth pithoi	Outward-thickened rim	-	-	1	-	-	-	-	-	-	-	-	-	-	-	1	-	-	-	1	4	1	-	*15*
	Hammer-rim	-	-	-	-	-	-	-	-	-	-	1	-	-	-	1	-	-	-	-	1	-	-	*4*
Jar	Low-necked	-	-	-	-	-	2	1	-	-	-	-	-	-	-	1		6	1	1	1	-	-	*28*
	High-necked	-	-	-	-	-	-	-	-	-	2	-	1	-	-	3	-	-	-	-	2	2	-	*14*
Churn		-	-	1	-	-	-	-	-	1	-	-	-	-	1	-	-	-	1		3	2	-	*13*
Ossuary		-	-	-	-	-	-	-	-	-	-	-	-	-	-	-	-	-	-	-	-	1	-	*1*
Cream ware		-	-	-	-	-	-	-	-	-	1	-	-	-	-	-	-	-	-	-	-	4	-	*5*
Disk		-	-	-	-	-	-	-	-	-	-	-	-	-	-	-	-	-	-	-	-	-	-	*2*
Total		*1*	*1*	*8*	*4*	*1*	*17*	*23*	*5*	*8*	*6*	*6*	*7*	*5*	*15*	*14*	*4*	*49*	*13*	*8*	*27*	*32*	*1*	*429*
Total (%)		*0.23*	*0.23*	*1.86*	*0.93*	*0.23*	*3.96*	*5.36*	*1.17*	*1.86*	*1.40*	*1.40*	*1.63*	*1.17*	*3.50*	*3.26*	*0.93*	*11.40*	*3.03*	*1.86*	*6.29*	*7.46*	*0.23*	*99.9*

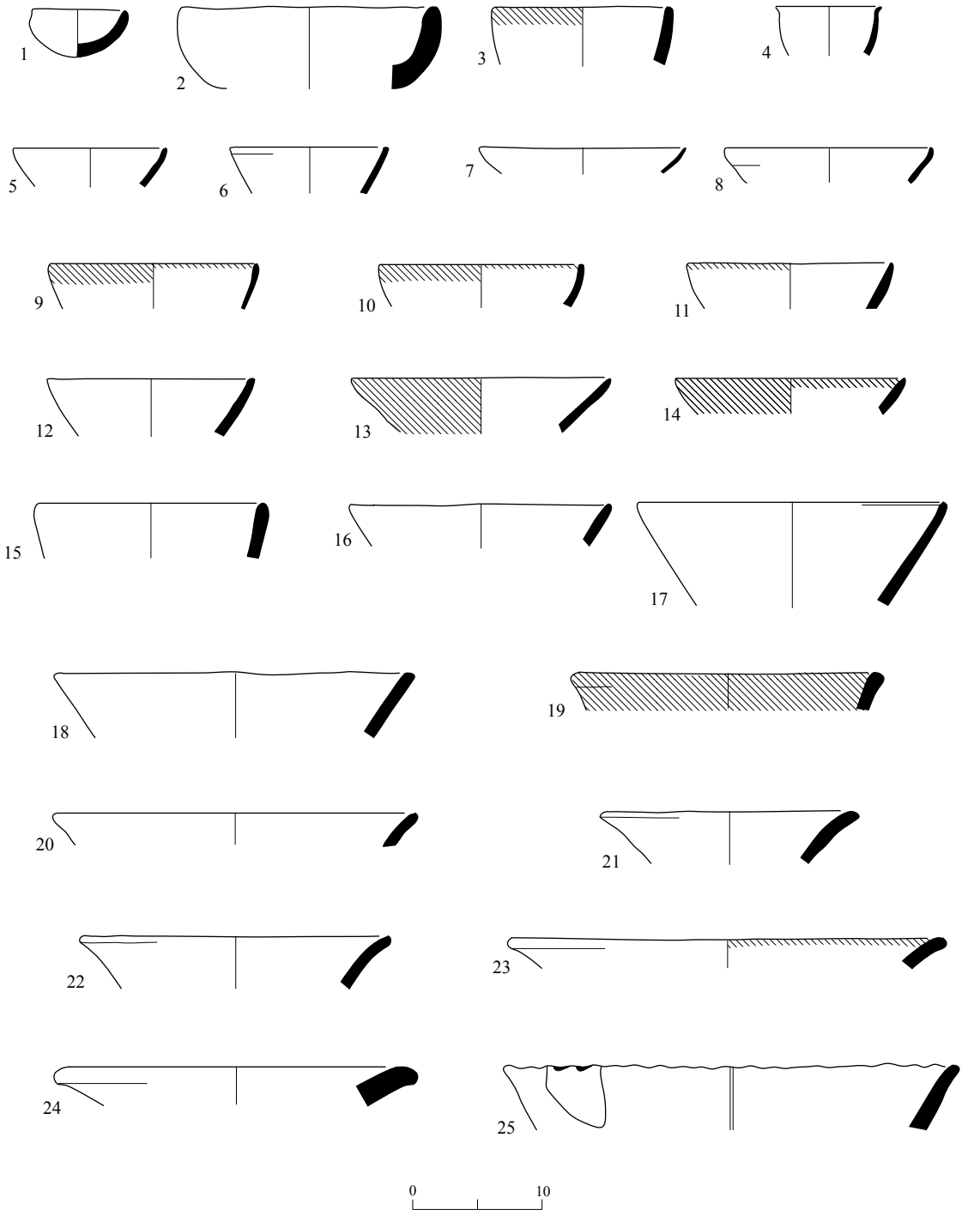

Fig. 20. Stratum III, bowls.

◂ **Fig. 20**

No.	Locus	Basket	Description
1	142	1075	Light cream-colored clay, pale light brown core, small to medium gray grits, medium-fired
2	148	1078	Light cream-colored clay, pale light brown core, small to medium gray grits, well-fired
3	200	1203	Light cream-colored clay, pale light cream core, small gray grits, well-fired
4	171	1138/4	Light cream-colored clay, pale light cream core, small gray grits, red wash on rim, well-fired
5	205	1209	Light cream-colored clay, pale light brown core, well-fired
6	200	1196/7	Light cream-colored clay, pale light brown core, well-fired
7	193	1174/1	Light cream-colored clay, pale light brown core, well-fired
8	148	1142/5	Light cream-colored clay, pale light cream core, small gray grits, well-fired
9	200	1203	Light cream-colored clay, pale light brown core, small gray grits, red wash on rim, well-fired
10	200	1211	Light cream-colored clay, pale light cream core, small gray grits, red wash on rim, well-fired
11	151	1121	Light cream-colored clay, pale light cream core, small gray grits, red wash on rim, well-fired
12	159	1104	Light brown-gray clay, pale gray core, small white and gray grits, well-fired
13	196	1198/4	Light brown clay, pale light gray core, small white and gray grits, red wash on int. and ext., well-fired
14	200	1208	Pale light brown clay, pale light brown-gray core, small white and gray grits, red wash on rim, well-fired
15	198	1205	Light cream-colored clay, pale light brown core, small to medium white and gray grits, well-fired
16	196	1198/2	Light cream-colored clay, pale light brown core, small to medium white and gray grits, well-fired
17	200	1210	Light brown-gray clay, light brown-gray core, small to medium white and gray grits, well-fired
18	200	1203	Light cream-colored clay, pale light brown core, small to medium gray grits, well-fired
19	199	1188	Light cream-colored clay, pale light brown core, small gray grits, red wash on ext. and int., well-fired
20	205	1209	Light cream-colored clay, pale light brown core, small gray grits, well-fired
21	151	1083	Light cream-colored clay, pale light brown core, small to medium gray grits, well-fired
22	136	1060	Light cream-colored clay, pale light brown core, small to medium gray grits, well-fired
23	205	1212	Light cream-colored clay, pale light brown core, small to medium gray grits, red wash on rim, well-fired
24	200	1197	Light cream-colored clay, pale light brown-gray core, small to medium white and gray grits, well-fired
25	197	1177/4	Light cream-colored clay, pale light brown core, small white and gray grits, thumb indentation on rim, well-fired

Large Bowls (Fig. 21:1–4).— These are open vessels whose walls are thicker than those of bowls (8%; n = 31). They are also deeper and exhibit more rounded shapes with thickened oblique or horizontal rims. Large bowls are commonly found in Be'er Sheva'-Ghassulian sites (Gilead and Goren 1995:157, 158, with references therein; Commenge 2006: Pl. 10.8:3, 4, 6, 7, with references therein).

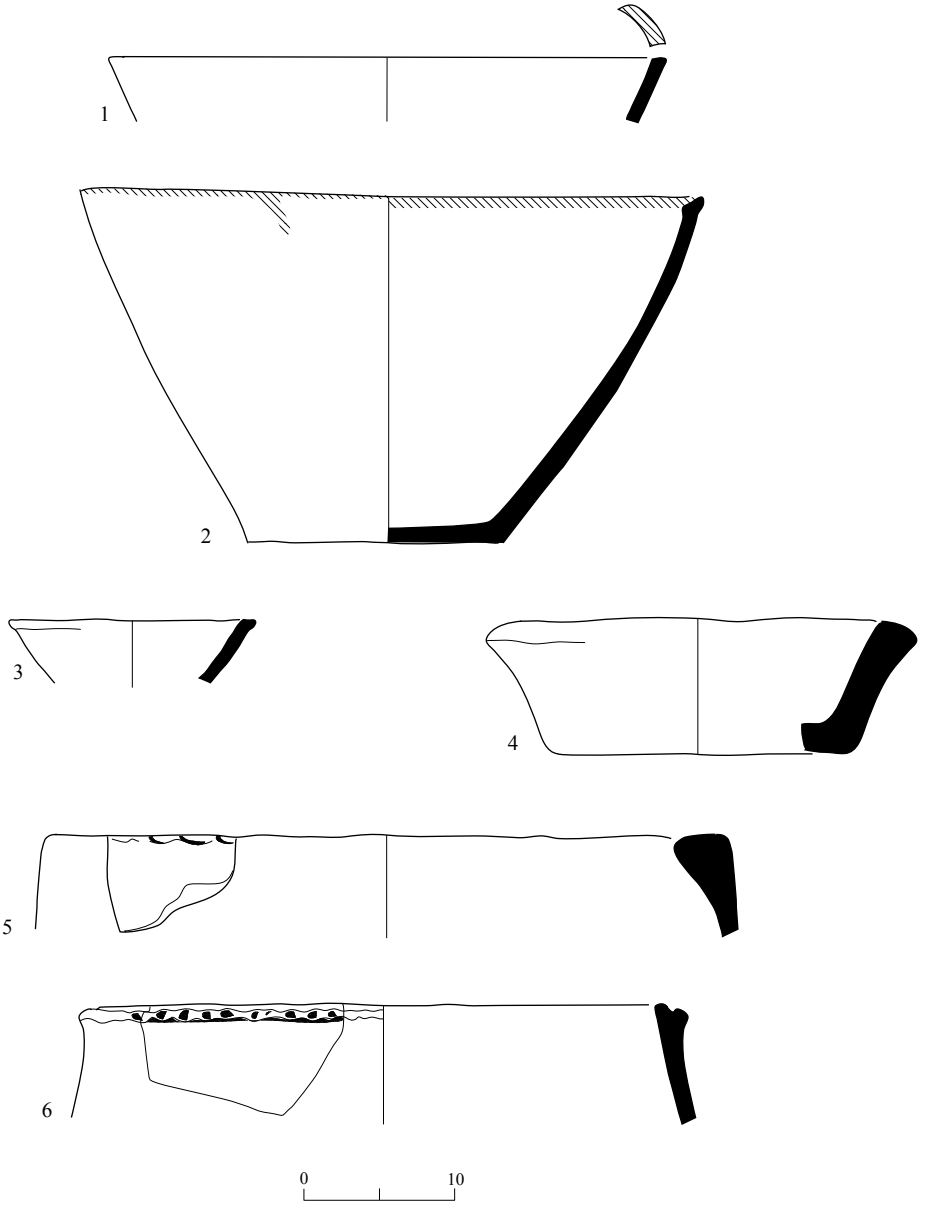

Fig. 21. Stratum III, bowls and basins.

No.	Type	Locus	Basket	Description
1	Bowl	205	1209	Light cream-colored clay, pale light brown core, small gray grits, red wash on rim, well-fired
2	Bowl	200	1211	Light cream-colored clay, pale light brown core, small to medium gray grits, red wash on rim, well-fired
3	Bowl	159	1104	Light cream-colored clay, pale light cream core, small to medium gray grits, medium-fired
4	Bowl	202	1203	Light brown-gray clay, light brown-gray core, small to medium white and gray grits, well fired
5	Basin	204	1207/25	Light pale-brown clay, light brown-gray core, small to medium gray grits, impressed thumb decoration on rim, well-fired
6	Basin	195	1180/2	Light pale-brown clay, light brown-gray core, small to medium gray grits, applied rope decoration on ext., well-fired

Some bowls have an inverted rim (not illustrated). These are relatively small vessels with a straight-cut rim, most of which also have a groove in the middle. Some of their rims bear a red "lipstick" paint. All rim examples of this type were very small and fragmented, and are therefore not depicted.

Other bowls have a square-cut rim (Fig. 21:1). These are deep vessels that are mostly undecorated (4%; n = 15), or have an external ledge rim (Fig. 21:2, 3; 3%; n = 11). Some bowls with ledge rims are relatively small (Fig. 21:3), but have thick walls and are therefore included in this category.

There are also shallow, large bowls (Fig. 21:4) with very thick walls and an overall wall and bottom thickness of 1.5 cm (1%; n = 5). They have a simple pointed or flaring rim (Garfinkel 1999: Type A6).

Basins (Fig. 21:5, 6).— Basins are large open vessels with thick walls and thickened triangular rims, sometimes with plastered rope decoration on the rim (Fig. 21:6). Basins are much heavier and shallower than the bowls and are roughly made (2%; n = 7).

Chalice or Pedestalled Bowls (not illustrated).— Only two chalice sherds were identified, based on the join between the upper and lower portions. However, the sherds are too fragmented to determine if the vessel was fenestrated.

Cornets (not illustrated).— Though cornets are one of the *fossil directeurs* of the Late Chalcolithic period, only one cornet base was recovered.

Closed Forms

Small Holemouth Jars/Goblets (Fig. 28:10).— These are small vessels with thin walls that are built and decorated similarly to hemispherical bowls, but their shape resembles a small holemouth jar (1%; n = 6). One complete goblet was found in F122 (Fig. 28:10); it has thick walls and carination on the shoulders.

Large Holemouth Jars (Fig. 22:1–11).— The large holemouth jars are closed vessels with a wide opening and thin walls. They comprise 18% of the assemblage (n = 76). These jars can be classified by rim type: simple rim, thickened rim, square-cut rim and upright rim.

Holemouth jars with simple rims (Fig. 22:1–3) are generally thin and slightly upright. Thickened rim holemouth jars (Fig. 22:4) have a rim that is thick in relation to the wall and tapers at the edge; some are decorated with a painted line near the rim. Square-cut rim holemouth jars (Fig. 22:5–9) are larger and more open than the above; the rims are occasionally decorated with plastered or impressed rope decoration. Holemouth jars with upright rims (Fig. 22:10, 11) have a low collar, sometimes with applied rope decoration on the rim, and are relatively large, almost fitting the category of pithoi.

Pithoi (Fig. 22:12–14).— Pithoi are large vessels, resembling large holemouth jars with their wide openings, thick walls and thickened rims. They are often decorated with applied or impressed rope decoration. The rims occur either as an outward thickened triangle rim (Fig. 22:12, 13) or a hammer-shaped rim (Fig. 22:14).

Jars (Fig. 23).— Most of the jars are red-slipped or have a painted thick line on the rim and neck. Some of the large jars have a plastered or impressed rope decoration near the rim. Some of the jars have a long neck and simple pointed rim that is sometimes flared outward (Fig. 23:1–6). These vary from small or medium-sized (Fig. 23:1–4) to very large forms (Fig. 23:5, 6).

The other type of jar has a strongly everted, short neck (Fig. 23:7–11). This type has a well-defined straight-cut or ledge rim, which is sometimes thickened.

Churns (Fig. 24:1).— Some sherds of churns from this excavation were recognized only by their unique handles, which are very large with a round profile (3%; n = 13). The other

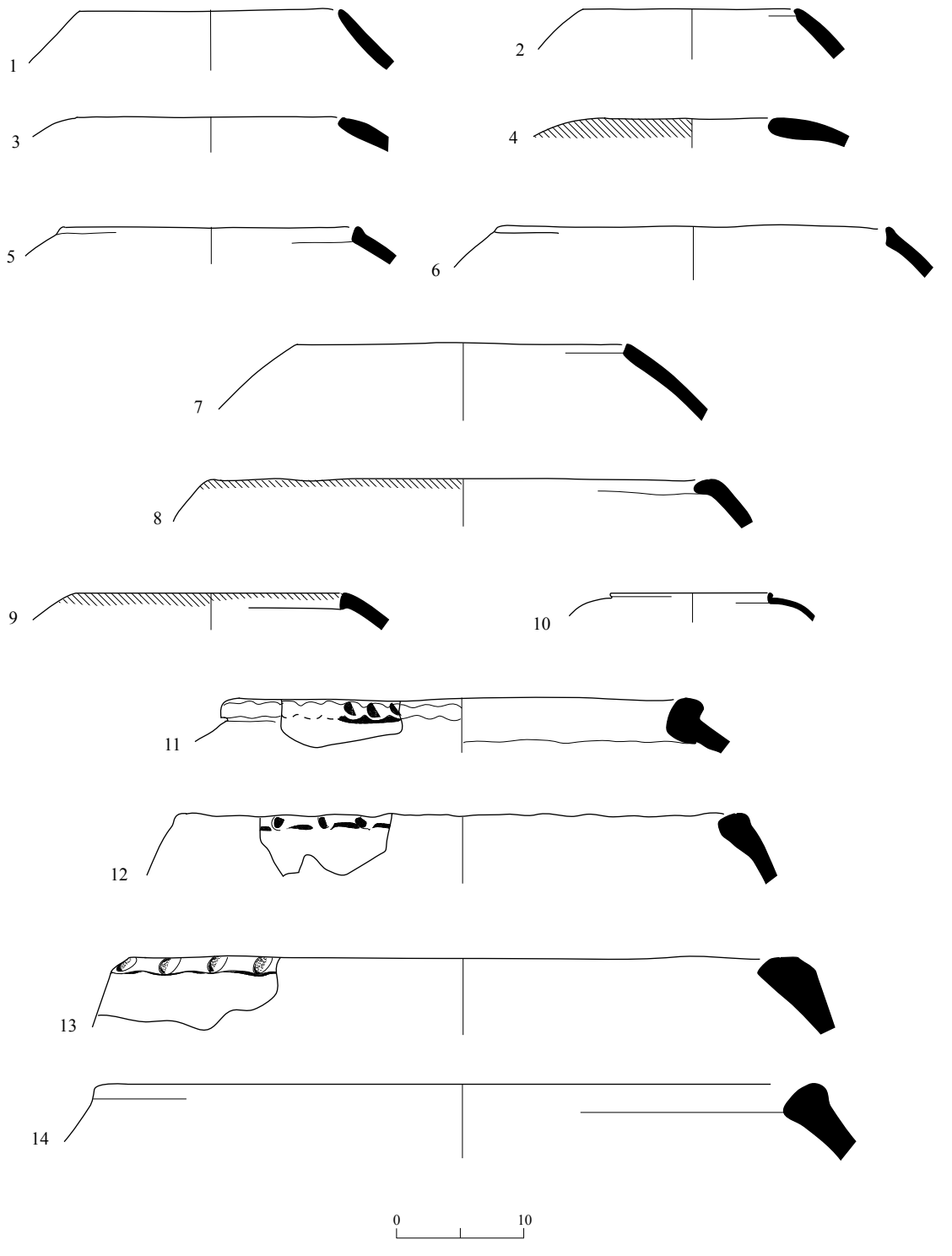

Fig. 22. Stratum III, holemouth jars and pithoi.

◂ **Fig. 22**

No.	Type	Locus	Basket	Description
1	Holemouth jar	187	1171/4	Light brown clay, light gray core, small to medium gray grits, well fired
2	Holemouth jar	199	1188/8	Light brown clay, light gray core, small to medium white and gray grits, well-fired
3	Holemouth jar	156	1103	Light cream-colored clay, light brown core, small to medium gray grits, well-fired
4	Holemouth jar	198	1198/1	Light brown clay, gray core, small to medium gray and white grits, red wash on ext., well-fired
5	Holemouth jar	196	1192	Light brown clay, light brown-gray core, small to medium gray grits, well-fired
6	Holemouth jar	205	1212	Light cream-colored clay, light brown core, small to medium white and gray grits, well-fired
7	Holemouth jar	200	1203	Light cream-colored clay, light brown core, small to medium gray grits, well-fired
8	Holemouth jar	196	1189/5	Light cream-colored clay, light brown core, small to medium gray grits, red wash on rim, well-fired
9	Holemouth jar	200	1196/9	Light cream-colored clay, light brown core, small to medium gray grits, red wash on rim, well-fired
10	Holemouth jar	151	1101	Light brown clay, light gray core, small white grits, well-fired
11	Holemouth jar	200	1197	Light brown clay, light brown-gray core, small to medium gray grits, impressed decoration on rim, well-fired
12	Pithos	199	1188/9	Light brown clay, gray core, small to medium gray grits, impressed thumb decoration on rim, well-fired
13	Pithos	151	1101	Light brown clay, light brown-gray core, small to medium gray grits, impressed thumb decoration on rim, well-fired
14	Pithos	199	1188/13	Light cream-colored clay, light brown core, small to medium gray grits, well-fired

sherds that seem to be from churns were too worn and small to be depicted except for one sherd with a piercing (Fig. 24:1). It may be part of a churn neck. Although the churn is a ceramic *fossil directeur* of the Ghassulian era, in most cases its frequencies are near 5% or even less (as in Ḥorbat ʻIllit B; see Milevski et al. 2013:95).

Ossuary (not illustrated).— One small sherd of an undecorated clay box, which seems to have been an ossuary, was recovered.

Bases (Fig. 24:2, 3).— Bases of ceramic vessels from Stratum III are mostly flat; raised or ring bases (Fig. 24:2, 3) are rare. Mat impressions appear on two bases of large vessels (not illustrated), suggesting that some vessels were made on mats. These techniques are all well-known from Ghassulian Chalcolithic assemblages (Commenge 2006).

Handles (Fig. 24:4–8).— Handles are relatively rare, consisting of triangle and pierced (Fig. 24:4, 5), loop (Fig. 24:6, 7) and pinched types (Fig. 24:8) that strongly resemble a ledge handle. All the handles appear to have originated from closed vessels, some have red wash on the exterior (Fig. 24:5, 7, 9), and one has thumb-impressed decoration (Fig. 24:8).

Body Fragments (Fig 24:9).— Applied plastic decoration, probably imitating a rope, is rare. A

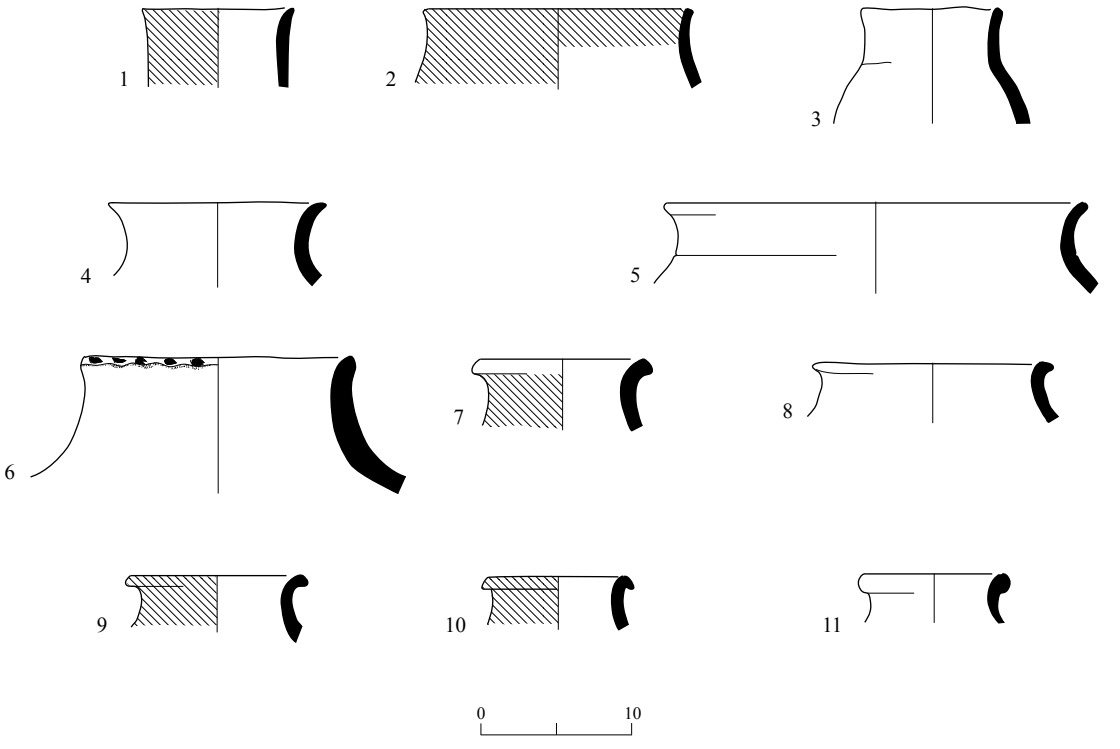

Fig. 23. Stratum III, store jars.

No.	Locus	Basket	Description
1	196	1198/3	Light brown clay, light brown core, small gray grits, red wash on ext., well-fired
2	187	1171/6	Light orange-brown clay, light gray-brown core, small to medium white and gray grits, red wash on ext. and int., well-fired
3	196	1192/13	Light orange-brown clay, light gray-brown core, small to medium white and gray grits, well-fired
4	196	1192/14	Light brown clay, light brown core, small white and gray grits, well-fired
5	126	1046	Light brown clay, dark gray core, small to medium white and gray grits, remains of white wash on rim, well-fired
6	136	1060	Light brown clay, light brown-gray core, small to medium white and gray grits, medium fired
7	200	1196/15	Light brown clay, light brown core, small to medium gray grits, red wash on ext., well-fired
8	200	1203	Light brown clay, light brown core, small gray grits, well-fired
9	196	1183/6	Light brown clay, light brown core, small to medium gray grits, red wash on ext., well-fired
10	204	1206	Light brown clay, light brown core, small white and gray grits, red wash on ext., well-fired
11	203	1204	Light brown clay, light brown core, small white and gray grits, well-fired

Fig. 24. Stratum III, ceramic and stone objects.

singular example of this was found on a body sherd of a jar, which also exhibits a red wash on its exterior.

Platter or Flat Lid (Fig. 24:10).— A fragment of a large clay disk, possibly a platter or flat lid, was found in Stratum III.

Miscellaneous Ceramic Objects (Fig. 24:11–14).— Several ceramic items have been grouped together as "miscellaneous." This includes a ceramic stopper (Fig. 24:11), a fragment of a possible ceramic figurine (Fig. 24:12), a ceramic spindle whorl (Fig. 24:13) and a terracotta bead (Fig. 24:14).

◂ **Fig. 24**

No.	Type	Locus	Basket	Description
1	Churn?	205	1262	Light brown clay, pale light brown core, small gray grits, red wash on ext., well-fired
2	Base	151	1089	Light brown clay, light brown core, small gray grits, well-fired
3	Base	200	1203	Light cream clay, light brown core, small to medium gray grits, well-fired
4	Jar handle	202	1199/6	Light cream clay, light brown core, small to medium gray grits, well-fired
5	Lug handle	151	1101	Light brown clay, light brown core, small to medium white grits, well- fired
6	Handle	196	1189/6	Light brown clay, light brown core, small to medium white grits, medium fired
7	Handle	202	1199/11	Light brown-orange clay, light brown core, small gray grits, pricked decoration on ext., red wash on ext., well-fired
8	Handle	187	1173/13	Light brown clay, gray core, small to medium gray grits, vestigial ledge handle with thumb-impressed decoration, well-fired
9	Body fragment	198	1200/3	Light cream clay, light brown core, small to medium gray grits, applied rope decoration, red wash on ext., medium fired
10	Platter/lid	148	1078	Light cream clay, pale light brown core, small to medium gray grits, medium fired
11	Stopper	198	1205	Light brown-gray clay, small gray grits, medium fired
12	Figurine?	159	1088	Light brown clay, gray-black core, small to medium white grits, medium fired
13	Spindle whorl	151	1089	Light cream clay, light cream core, small gray grits, poorly fired
14	Terracotta bead	123	1035	Brown clay, elliptical hole
15	Basalt bowl base	151	1089	Non-vesicular basalt, well ground on ext.
16	Basalt bowl	200	1210	Vesicular basalt, well ground on int. and ext.
17	Three-legged basalt bowl	200	1208	Non-vesicular basalt, protruding ridge near base and remains of three stumps at base, polished on int. and ext.
18	Basalt palette?	195	1180	Non-vesicular basalt, worn-down and polished on int., rough on ext., remains of hole drilled at one end
19	Stone weight?	200	1208	Gray limestone, biconical perforation

Stone Objects (Fig. 24:15–19).— A few basalt bowls were found (Fig. 24:15–17). Basalt bowls are one of the best-known Ghassulian vessel types (Rowan 1998: Figs. 30–32). The basalt bowls of Beqoʻa include bowls with elaborate, thin flaring walls, tapered rim and thick flat base. These are labeled Class 3B by Rowan (1998) and are similar in shape to V-shaped ceramic bowls (Fig. 24:15, 16). The excavation also yielded basalt bowls with three legs and a slightly raised ridge above the base (Figs. 24:17; 29:9). A basalt palette (Fig. 24:18) with the remains of a drilled perforation was also found.

The presence of fine Ghassulian basalt bowls links Beqoʻa with distant geographic regions such as the Golan Heights and eastern Galilee (Rowan 1998).

Another groundstone vessel includes a limestone weight fragment (Fig. 24:19).

Conclusions

In general, the Beqoʿa assemblage from Stratum III comprises a typical domestic Late Chalcolithic repertoire. The majority of the vessels were for food preparation and serving (80%), including bowls, basins and holemouth jars. The next largest group was storage vessels (18%), including kraters, store jars, pithoi, and the remaining types, such as cornets and churns, are 2%. Like most Chalcolithic assemblages, the most prevalent vessel of the assemblage is the V-shaped bowl (Commenge 2006). The main difference between the Beqoʿa Stratum III assemblage and most contemporaneous assemblages is its near absence of cornets. A similar absence was noticed at other Chalcolithic sites, such as Shiqmim (Levy and Menachem 1987; Burton and Levy 2011). Some scholars argue that the absence of cornets may be a chronological phenomenon; their rarity is characteristic of a later phase of the Late Chalcolithic period (Rowan and Golden 2009; in contrast, see Gilead 2011, who attributes the absence of cornets to a Be'er Sheva' sub-culture). Other sites in the southern Levant had similar types of pottery (for a full comparison with other sites, see Milevski et al. 2013: Fig. 38). To conclude, it appears that the Beqoʿa Chalcolithic pottery assemblage, especially the lack of cornets, is similar to sites such as Shiqmim (Levy and Menachem 1987) and Gilat (Commenge 2006: Table 10.1).

STRATA II–I: THE EARLY BRONZE AGE

Ceramics

The ceramic assemblage from Strata II and I was well-fired and handmade, as indicated by the clear signs of smoothing fingermarks seen on some of the vessels. Rims and necks may have been fashioned on a slow wheel. Flat bases are the most common diagnostic feature. Only a few vessels bear traces of red slip or wash, though this surface treatment may have been more common than currently appears, since the red color may have worn off over time. Plastic rope decoration, usually small and indented coil segments applied to holemouth jars, is common, as are potmarks of an incised pattern (Fig. 27:1) and thumb indentations, which often decorate ledge handles (Figs. 26:1; 27:6).

The following pottery analysis concerning Strata II–I is based on earlier studies of EB I ceramic repertoires from southwestern Canaan. The typology is based on the EB I pottery from Ashqelon Barneʿa (Golani, forthcoming [a]; forthcoming [b]). Gaps in the typological numbering in this article indicate a type in the Ashqelon Barneʿa assemblage that is absent from the Beqoʿa assemblage.

No appreciable differences were found between the ceramics from Stratum II (see Figs. 25; 26; 27:1–11) and Stratum I (see Fig. 27:12–17). Though the finds from these two strata are presented separately in the plates, the following discussion pertains to both.

Bowls (Figs. 25; 27:12)

Small Hemispherical Bowls (Fig. 25:1–3).— Small bowls with a hemispherical form and simple tapering rims are considered one of the hallmarks of the late EB I period (Amiran 1969:49). This was identified as Type B III at Ashqelon Barneʿa (Golani, forthcoming [b]). In southwestern Canaan, this type was found at Eshta'ol Stratum III (Golani, forthcoming [c]), Tel ʿErani Layer C (Yekutieli 2006: Fig. 5:10–12), Tel Ḥalif Terrace Strata I–II (Alon and Yekutieli 1995: Figs. 15:17; 16:8, 9, 13; 17:12; 20:10–18) and Ashqelon Barneʿa Strata II–IV (Golani, forthcoming [b]).

Deep Bowls with In-Turned Rims (Figs. 25:4–7; 27:12).— These deep V-shaped bowls have a slightly in-turned, thickened rim with a triangular section that may have thick or thin walls. Examples of this type are known from the late EB IA through the late EB IB, for example at Ashqelon Barneʿa Strata II–IV,

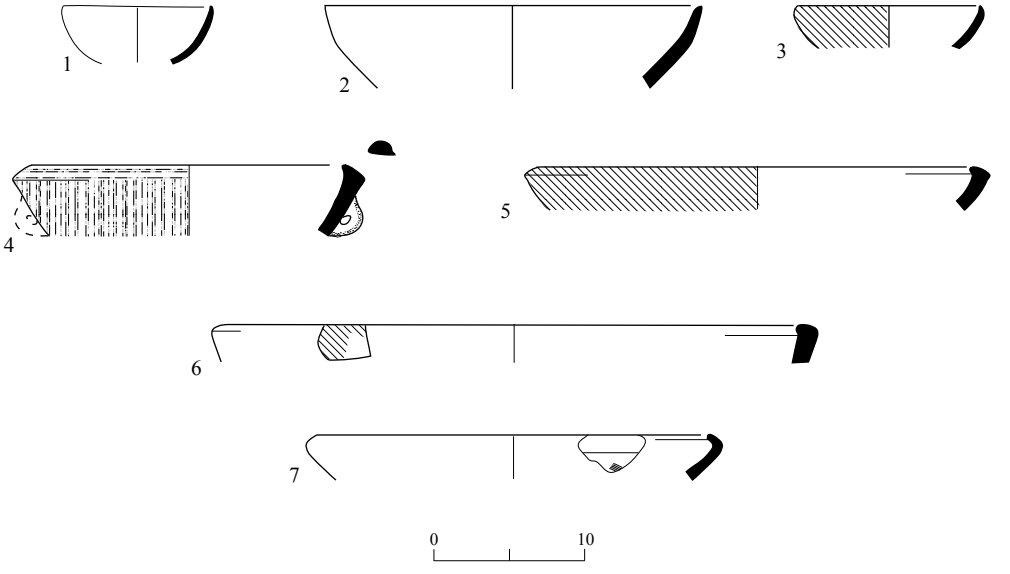

Fig. 25. Stratum II, bowls.

No.	Locus	Basket	Description
1	182	1151	Light brown clay, gray core, small white grits, well-fired
2	153	1092	Light brown-orange clay, gray core, small to medium white grits, well-fired
3	117	1028	Light brown-orange clay, gray core, small white grits, red wash on int. and ext., well-fired
4	185	1156/2	Light brown clay, gray core, small white and gray grits, red wash and burnish on ext., well-fired
5	153	1092	Light brown-orange clay, gray core, small white, red wash on ext., well-fired
6	126	1046	Light brown clay, gray core, small gray grits, red stripe decoration on rim, medium fired
7	153	1092	Light brown-orange clay, gray core, small white grits, well-fired

Type B IX (Golani, forthcoming [b]), Eshta'ol Stratum III (Golani, forthcoming [c]) and from the Tel Ḥalif Silo Site, Stratum II from the late EB I (Alon and Yekutieli 1995: Fig. 19:16). In addition, such bowls are found to continue into the early EB II, such as at Dalit, Strata II, III (Gophna and Iron-Lubin 1996: Figs. 47:4, 48:6) and Tel Afeq, Stratum VII (Beck 2000: Fig. 8.5:2).

Holemouth Jars (Figs. 26; 27:13, 14)

Plain Holemouth Jars with Tapering Rims (Fig. 26:1–3).— These vessels are not decorated. The rim is often rounded and tapering, sometimes slightly pinched (Fig. 26:2). This is one of the most common forms of holemouth jars, occurring in a variety of sizes and fabrics throughout the Chalcolithic and EB I periods. They are known from the Chalcolithic assemblages from Shiqmim, BP II (Levy 1987: Fig. 12.11:6) and Abu Maṭar, Stratum IB-ante IV (Commenge-Pellerin 1987: Figs. 27:1; 28:4, 5, 7, 9, 10). From EB I, they are found at Niẓẓanim Strata 3 and 5 (Yekutieli and Gophna 1994: Figs. 10:7; 12:14, 15), Tel Ḥalif Terrace Silo Site Strata III, IV (Alon and Yekutieli 1995: Figs. 23:12, 15; 24:5), Taur Ikhbeineh Phases IV–V (Oren and Yekutieli 1992: Fig.

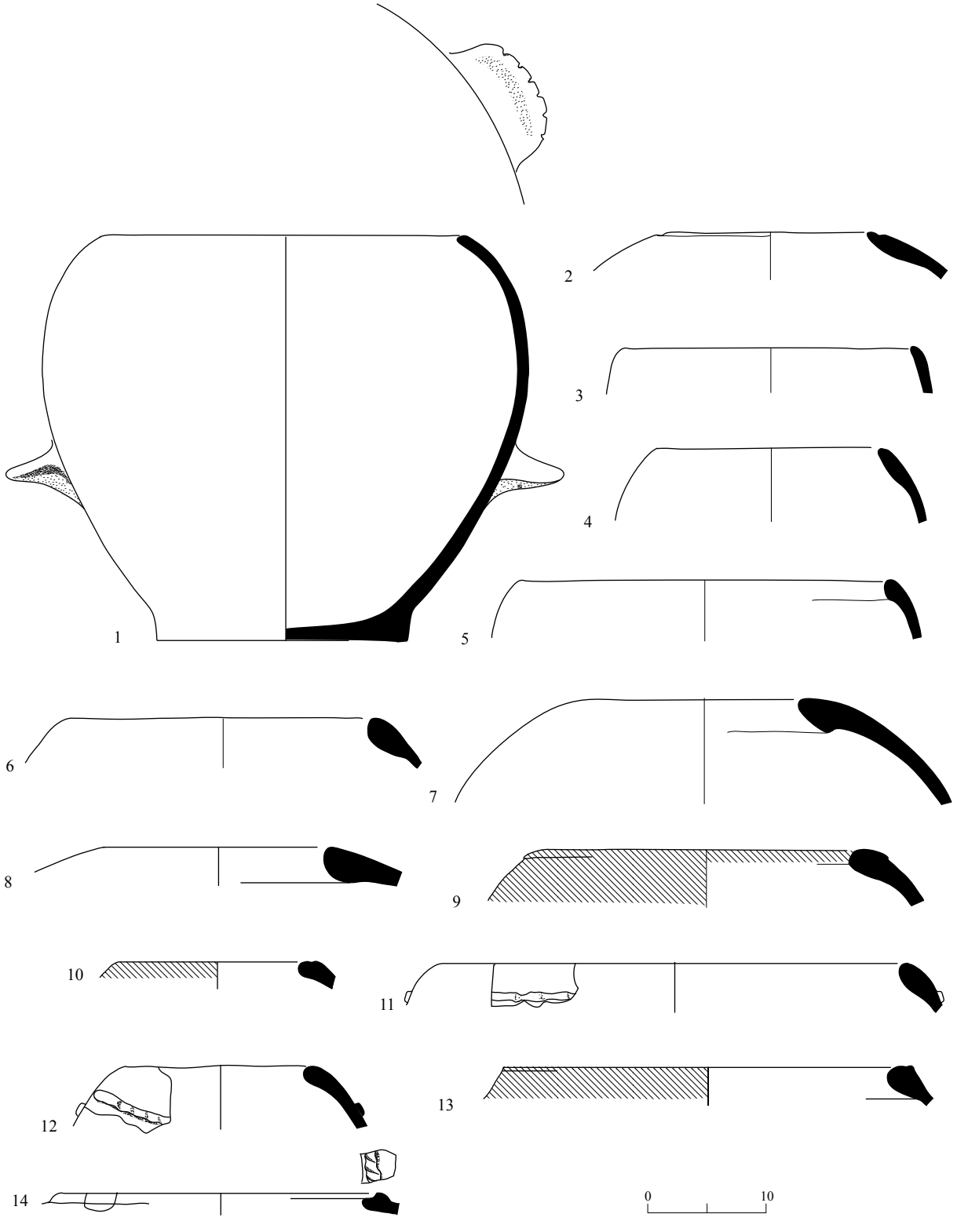

Fig. 26. Stratum II, holemouth jars.

◂ **Fig. 26**

No.	Locus	Basket	Description
1	153	1093	Light brown-orange clay, gray core, small to medium white and gray grits, well-fired
2	190	1169/13	Light brown clay, gray core, small to medium white grits, medium fired
3	182	1160/6	Light brown-red clay, gray core, small to medium white and gray grits, well-fired
4	190	1169/16	Brown clay, gray core, small to medium white and gray grits, medium fired
5	191	1168/9	Brown-red clay, gray core, small to medium white and gray grits, well-fired
6	194	1173/4	Brown-red clay, gray core, small to medium white and gray grits, well-fired
7	190	1169/17	Light brown clay, gray core, small to medium white grits, well-fired
8	155	1097	Light brown-orange clay, gray core, small to medium white grits, well-fired
9	197	1184/2	Light brown clay, gray core, small to medium gray grits, red wash on ext., medium-fired
10	117	1028	Light pale-brown clay, gray core small to medium white and gray grits, red wash on ext., well-fired
11	126	1046	Light brown clay, gray core small gray grits, applied rope decoration on rim, well-fired
12	126	1108	Brown clay, gray core, small to medium white and gray grits, applied rope decoration below rim, well-fired
13	182	1054	Light brown clay, gray core, small to medium gray grits, red wash on ext. and int., medium fired
14	126	1046	Light brown clay, gray core, small to medium white and gray grits, applied rope decoration on rim, well-fired

11:12, 15), Tel ʻErani, DII Layer D (Yekutieli 2000: Fig. 33:3) and Ashqelon Barneʻa Strata II–IV, Type H I (Golani, forthcoming [b]).

Holemouth Jars with Rims Thickened on the Inside (Figs. 26:4–13; 27:13; 14).—Holemouth jars with a thickened rim folded over on the inside sometimes have a rope or ridge decoration below the rim (Fig. 26:9–13). Holemouths with thickened rims are found in early EB I sites, such as Ashqelon Afridar, Area J, Stratum 5 (Baumgarten 2004: Fig. 16:4). However, this type of holemouth jar is more typical of the late EB I when a general trend of thickened holemouth rims on their inside may be observed toward the end of the period (Alon and Yekutieli 1995:179). By the end of the late EB I, the thickening becomes more pronounced, often with a segmented rope decoration below the rim, such as those from the Tel Ḥalif Terrace Silo Site Strata I, II (Alon and Yekutieli 1995: Figs. 15; 16:11, 12; 17:7; 19:3–9), Eshta'ol Stratum III (Golani, forthcoming [c]), Ashqelon Barneʻa Strata III and II, Type H III (Golani, forthcoming [b]) and the Soreq Basin (el-Maghar; see Braun et al. 2001: Fig. 4.3:6).

Holemouth Jars with Ridge or Rope Decoration Below the Rim (Fig. 26:14).—Characteristic of EB I, the holemouth jars decorated with ropes or ridges beneath their rims begin to appear in early EB I sites, such as Ashqelon Afridar, Area E (Golani 2004: Fig. 25:4–8), Area F (Stratum I; Khalaily 2004: Fig. 7:7, 10), Area G (Braun and Gophna 2004: Fig. 20:8, 14, 15) and Tel ʻErani Layer D (Yekutieli 2000: Fig. 33:6). This form continues in late EB I, for example at Eshta'ol Stratum III (Golani, forthcoming [c]) and Ashqelon Barneʻa Strata II–IV, Type H IV (Golani, forthcoming [b]).

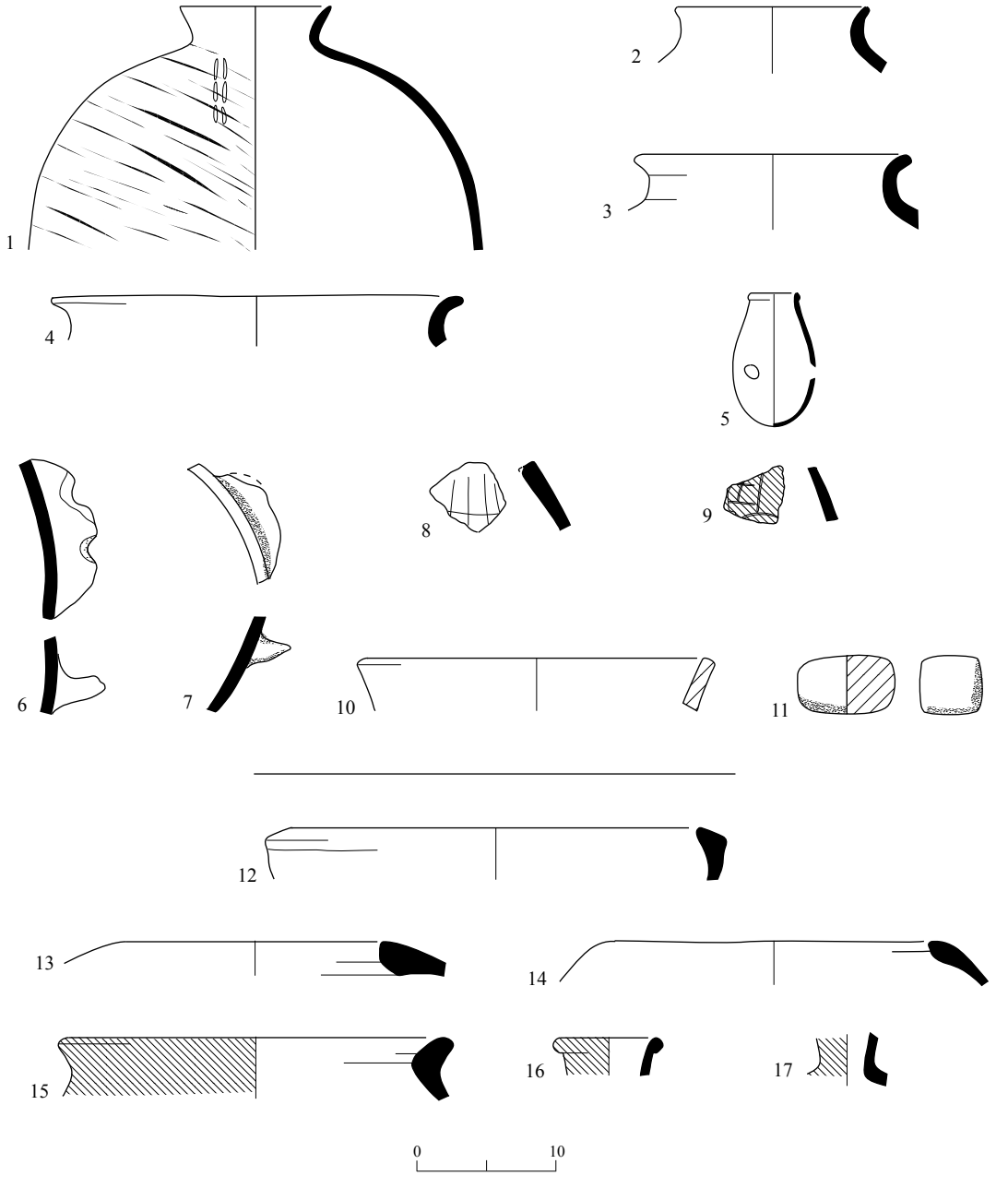

Fig. 27. Stratum II, ceramics (1–9) and stone objects (10, 11); Stratum I, ceramics (12–17).

Store Jars (Fig. 27:1–4, 15).— Medium- to large-sized store jars with a sloping shoulder and sharply out-flaring rim are common from the beginning of the late EB IA, as seen at Tel Ḥalif Site 101 (Dessel 1991: Pl. 24:8), and were found throughout the late EB IA and well into the EB IB in southwestern Canaan, such as at Eshta'ol Stratum III (Golani, forthcoming [c]) and Ashqelon Barne'a Strata II–IV, Type SJ VIII (Golani, forthcoming [b]).

Egyptianized Ceramics (Fig. 27:5, 16).— A single complete juglet (Fig. 27:5) was found on a floor associated with the last phase of the

◂ **Fig. 27**

No.	Type	Stratum	Locus	Basket	Description
1	Store jar	II	188	1179	Light brown-gray clay, light gray core, small to medium white and gray grits, incised decoration on shoulder, medium fired
2	Store jar	II	153	1092	Light brown-gray clay, light gray core, small to medium white and gray grits, well-fired
3	Store jar	II	126	1108	Light cream clay; light brown core, small to medium gray grits; well-fired
4	Store jar	II	182	1160	Light brown-orange clay, light brown core, small to medium white and gray grits, well-fired
5	Juglet (Egyptianized)	II	182	1162	Brown clay, brown-gray core, small white grits, medium fired
6	Ledge handle	II	154	1096	Brown clay, gray core, small to medium white and gray grits, medium fired
7	Ledge handle	II	182	1164	Light brown clay, light gray core, small white grits, well-fired
8	Incised sherd	II	117	1028	Light brown-orange clay, light gray core, small white grits, well-fired, incised horizontal and vertical lines
9	Incised sherd	II	140	1077	Light brown clay, light gray core, small white and gray grits, incised design on ext., red wash on ext., well-fired
10	Basalt bowl	II	185	1152	Non-vesicular basalt, worn and polished on int. and ext.
11	Stone rubber	II	126	1058	Rectangular limestone, worn on all sides
12	Krater	I	184	1154/12	Light brown-orange clay, gray core, small white and gray grits, very well-fired
13	Holemouth jar	I	184	1154/14	Light brown-orange clay, gray core, small to medium white and gray grits, very well-fired
14	Holemouth jar	I	184	1154/15	Light brown-orange clay, gray core, small to medium white and gray grits, well-fired
15	Store jar	I	184	1154/16	Light brown-orange clay, light brown-orange core, small to medium white and gray grits, red wash on ext., very well-fired
16	Small bottle or flask (Egyptianized)	I	186	1158/1	Light brown-orange clay, light brown-orange core, small to medium white and gray grits, red wash on ext., very well-fired
17	Amphoriskos?	I	184	1154/3	Light brown-orange clay, light brown-orange core, small white and gray grits, red wash on ext., very well-fired

Stratum II occupation. The lower portion of the juglet has a hole that appears to have been deliberately made, though the reason for it is unclear. This juglet is bag-shaped with a rounded base, sloping shoulder and simple vertical or slightly everted rim. Such juglets, often termed "Egyptian style drop-shaped juglets" or "drop-pots" (Hamilton 1993), are common in late EB IA and especially in EB IB in southwestern Canaan. Similar vessels have been found at Ashqelon Barneʻa Strata II–IV (Golani, forthcoming [b]), and at Ashqelon Afridar, Area E (Golani 2004: Fig. 29:1–5), Area F (Stratum I; Khalaily 2004: Fig. 10:8), Area J Strata 3–2 (Baumgarten 2004: Figs. 12:4; 13:4, 5) and Area M Strata I, II (Golani 2008: Fig. 9:14). They are also known from Taur Ikhbeineh Phases III, IV (Oren and Yekutieli 1992: Figs. 10:9, 10; 13:15–18), Tel ʻErani (Kempinski and Gilead 1991: Fig. 12:11–13) and ʻEn Besor (Gophna

1976: Fig. 6:11, 12). Drop-shaped juglets are an example of Egyptian ceramic traditions (Yekutieli 2000:137; Amiran and van den Brink 2001:41, 45, Fig. 3.10) that were often made in the country.

A second fragment of Egyptianized pottery was recovered from Stratum I, and consisted of a thickened, out-turned rolled rim with a red wash (Fig. 27:16). This is a remnant of a small bottle or flask. Parallels of this form are also common, for example from Tel Ma'aḥaz (Amiran and van den Brink 2001: Fig. 3.11), dated from the late EB I.

Handles (Fig. 27:6, 7).— The handles of the Stratum II–I assemblage are primarily ledge handles of store jars or kraters (e.g., Fig. 27:1). Most examples feature indented thumb impressions (Fig. 27:6).

Incised Sherds (Fig. 27:8, 9).— Two incised sherds were recovered. Both belonged to closed vessels of an indeterminate form, and were incised prior to firing. One sherd (Fig. 27:8) originates from L117, the debris on a surface associated with Stratum II. This sherd is broken on all sides, and bears an incised design of four roughly parallel lines bisected by a perpendicular fifth line. The other sherd (Fig. 27:9) is from an unclear context, and was decorated with an incised linear design on a red wash. While both designs appear to have been fragments of larger depictions, perhaps they are simply graffito since presently, neither can be associated with any certainty to a specific *serekh* motif (although they may have been attempts at imitating one).

Neck of an Amphoriskos? (Fig. 27:17).— A neck fragment of a small closed vessel decorated with red wash, possibly an amphoriskos, was recovered.

Stone Objects

Basalt Bowl Rim (Fig. 27:10).— A rim fragment of a bowl made of non-vesicular basalt was recovered from the debris on the floor inside the circular structure of Stratum II (L185). The rim was beveled at the edge, and was worn and polished on the interior and exterior. Bowls with splayed walls and beveled, often slightly everted rims (Type B1c; Rosenberg, forthcoming) correspond to Braun's (1990) Type IA and Type IB, and with Types 3ci–ii in Rowan's typology (1998: Table 2). Such bowls are ubiquitous throughout the southern Levant (Braun 1990:91), and are one of the hallmarks of EB I.

Stone Rubber/Abrader/Pestle (Fig. 27:11).— A complete, non-vesicular basalt rubber was recovered from the debris on a floor (L126) within Building 1. This object has a box-like shape and is smooth on all sides. The wear is probably the result of grinding. Such objects were used for crushing and grinding temper, seeds or pigment, but may also have been used for polishing stone vessels (abraders) or for working hides (rubbers), as observed in ethnographic studies (Adams 1989).

Bitumen (not illustrated).— Two small lumps of bitumen were recovered from L117 and L182, both from debris on surfaces assigned to Stratum II.

Conclusions

The pottery recovered from Strata II–I at Beqo'a constitutes a homogenous assemblage typical of southwestern Canaan during the late fourth and very beginning of the third millennia BCE. All represented types are common during late EB I. The architectural finds and the relatively small ceramic assemblage are consistent with late EB I sites in the Soreq basin, such as Ḥorbat 'Illin (Lower) Strata IV–III, Palmaḥim Quarry Stratum II and Eshta'ol Stratum III, when this region witnessed a floruit in settlement (Braun et al. 2001). The presence of a limited amount of Egyptianized locally made forms suggests a more focused association with the post-'Erani Phase C of late EB I in the Yarqon-Ayyalon

Basin, similar to that found in Ḥorbat ʻIllin (Lower) (Be'eri and Paz, in press; Braun, forthcoming) and Ḥorbat Shovav (Gophna and Paz 2008).

The Early Bronze Age ceramic assemblage of Beqoʻa lacks sharply carinated bowls and metallic-ware platters, and there is only one high-necked store jar, which notably does not have a thickened out-turning rim. These forms are indicative of the EB II period in the Shephelah region, and are found at sites such as Tel Dalit Strata IV–II (Gophna and Iron-Lubin 1996). The Early Bronze Age assemblage at Beqoʻa also lacks many of classic features of the early EB I in southwestern Canaan, such as V-shaped bowls and thumb-indented rims, both holdovers from the previous Chalcolithic period (Yekutieli 2000).

Although the EB I ceramic assemblage from Beqoʻa is relatively small, it is notable that no Egyptian ceramic imports were recovered. Only two examples of locally produced Egyptianized ceramic forms are present: the drop-shaped juglet (Fig. 27:5) and the remnant of a small bottle or flask found in Stratum I (Fig. 27:16). In addition, the two incised sherds (Fig. 27:8, 9), while clearly of local material and too fragmentary for a conclusive identification, may possibly represent fragments of Egyptian *serekhs* that are commonly found on local, as well as imported vessels during this period. Egyptianizing traits and occasional direct imports are a defining feature of the very late EB I, specifically in the Soreq basin and generally in southwestern Canaan. The lack of direct Egyptian ceramic imports in the Beqoʻa assemblage may be due to the fact that such imports were generally not a significant percentage of any ceramic assemblage in the nearby region, and that Beqoʻa appears to have been a small site of limited significance. However, this stands in contrast to the five examples of *Chambardia rubens* shells recovered from Stratum II that provide direct evidence of Egyptian imports (see Ktalav, this volume).

The ceramic assemblage of Beqoʻa Strata II–I is also notable for the lack of features characteristic of the ʻErani C ceramic horizon, which has been defined as representative of the early portion of the late EB I in southwestern Canaan (EB IB1, cf. Yekutieli 2000; 2002). The assemblage from Beqoʻa is typified by thickened holemouth rims, often with segmented rope decoration, representative of the end of EB IB (EB IB2, Yekutieli 2000), along with some bowl types—such as deep bowls with inturned rims—that are found to continue into EB II. These observations suggest that the Stratum II settlement be seen as a very late, post-ʻErani C phase within the late EB I.

FEATURE 122 (Figs. 28, 29)

A small ceramic assemblage from Cave F122 yielded a disturbed upper layer with a small amount of Persian-period ceramics (Fig. 28:11). Below this level, all the finds may be associated with Stratum III of the Chalcolithic period (Figs. 28:1–10; 29). The bowls from F122 include typical V-shaped forms (Fig. 28:1–5), as well as deep bowls (Fig. 28:6–9). Of special note is a small goblet (Fig. 28:10, see above). Other forms include holemouth jars (Fig. 29:1–5), all typical of the Ghassulian Chalcolithic. One of the holemouth jars was decorated with a red slip on its exterior and two parallel rows of small impressions forming a band around its circumference (Fig. 29:1). Store jars (Fig. 29:6–8) include typical high-necked (Fig. 29:6) and short-necked types (Fig. 29:7, 8). A large portion of a short-necked storage jar features an incised decoration of three converging lines between which are a series of impressed circles (Fig. 29:8). Other Chalcolithic finds from F122 include a fragment of a basalt bowl with three legs and a slightly raised ridge above the base (Fig. 29:9) of which an identical example was also retrieved from the excavation of Area C (Fig. 24:17), and a small disk bead made of shell (Fig. 29:10).

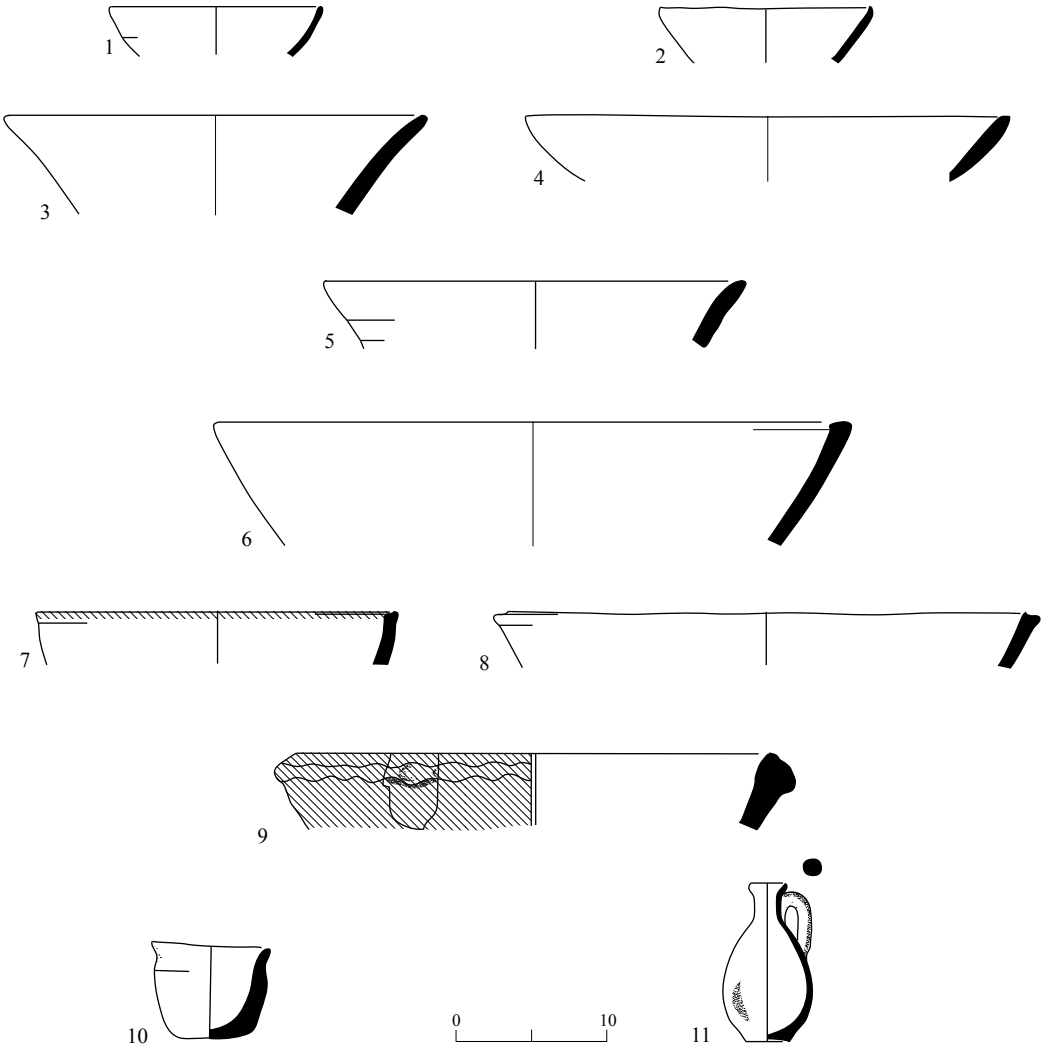

Fig. 28. Feature 122, Chalcolithic bowls and goblet (1–10); a Persian juglet (11).

No.	Type	Locus	Basket	Description
1	Bowl	177	1141/16	Light cream-gray clay, light cream-gray core, small gray grits, well-fired
2	Bowl	177	1141/8	Light cream clay, light cream core, small gray grits, medium fired
3	Bowl	172	1133/25	Light cream clay, light cream core, small to medium gray grits, well-fired
4	Bowl	170	1131/1	Brown clay, light brown-gray core, small to medium white and gray grits, well-fired
5	Bowl	173	1134/2	Light cream clay, light cream core, small to medium gray grits, well-fired
6	Bowl	171	1135/2	Light brown clay, gray core, small to medium white and gray grits, medium fired
7	Bowl	177	1144/11	Light cream clay, light gray core, small gray grits, red wash on rim, well-fired
8	Bowl	175	1139/6	Light gray clay, light gray core, small to medium gray grits, well-fired
9	Bowl	179	1136/3	Light brown clay, light brown core, small to medium white and gray grits, impressed thumb decoration on rim, red wash on ext., well-fired
10	Goblet	138	1083	Light brown-orange clay, small to medium white and gray grits, medium fired
11	Juglet	1004	100032	Light brown yellow clay, light brown yellow core, small white grits, well-fired

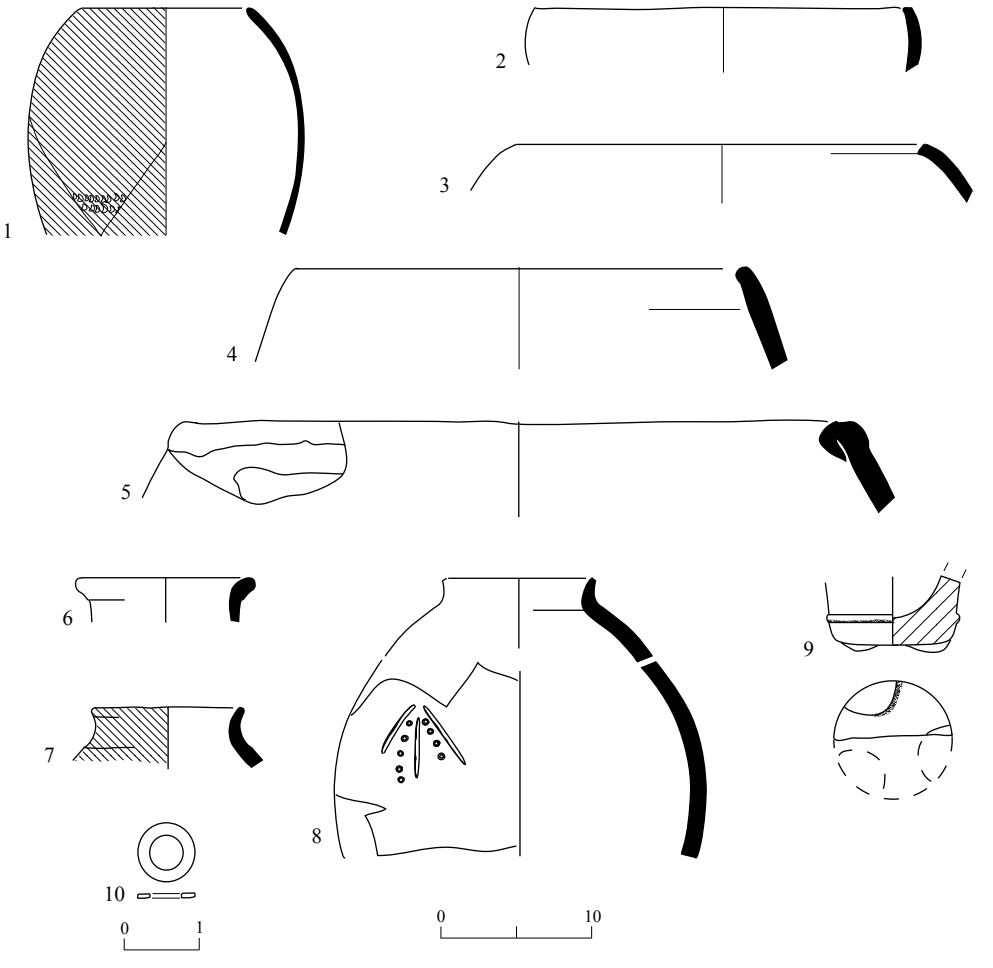

Fig. 29. Feature 122, Chalcolithic ceramics (1–8), stone object (9) and shell bead (10).

No.	Type	Locus	Basket	Description
1	Holemouth jar	177	1144	Light brown clay, light brown-gray core, small to medium white and gray grits, pricked decoration, red wash on ext., well-fired
2	Holemouth jar	174	1135/3	Light cream clay, light cream core, small to medium gray grits, medium fired
3	Holemouth jar	174	1135/4	Light brown clay, light brown-gray core, small to medium white and gray grits, well-fired
4	Holemouth jar	177	1141/5	Light brown clay, light brown-gray core, small to medium white and gray grits, well-fired
5	Holemouth jar/ basin	158	1125	Light cream clay, light brown core, small to medium gray grits, well-fired
6	Store jar	137	1111	Light brown-orange clay, brown-gray core, small white grits, well-fired
7	Store jar	174	1145/1	Light brown clay, light gray core, small to medium white and gray grits, red wash on ext., well-fired
8	Store jar	138	1061	Light cream-brown clay, light brown core, small to medium gray grits, incised decoration, well-fired
9	Legged basalt bowl	178	1142	Non-vesicular basalt, remains of leg stumps at base, well-ground on int. and ext.
10	Bead	173	1137	Shell

SUMMARY AND DISCUSSION

The results of the excavation, along with data gleaned from mechanical trenching, indicate that the proto-historic site of Beqoʿa was relatively small and may be reasonably estimated to be about 10–15 dunams in size. The excavation enabled identification of two distinct settlement periods, the Ghassulian Chalcolithic (Stratum III) and late EB I (Strata II–I).

The settlement appears to have been situated at the base of a U-shaped depression that faced southeast, toward the local wadi. The basal alluvium, upon which the initial occupation found in Area C was established (Stratum III), lies at a lower elevation than the alluvium beneath the earliest floors of Areas A and D, which are located on either side of Area C, suggesting that Stratum III was established in a slight topographical depression. Over time, earth and archaeological finds accumulated in this depression, so that most of the area was leveled by the time the Stratum II occupation began.

Chalcolithic *in situ* remains were identified in Areas A–D in Stratum III; these were found lying directly upon the basal alluvium. In Area C, the Chalcolithic settlement comprised two phases, both of which had limited architectural remains. In addition, a Chalcolithic burial cave (F122) was found to the east, near the Chalcolithic habitation site.

The ceramic repertoire associated with Stratum III is typical of the late Chalcolithic (Ghassulian phase). The very limited quantity of cornets may suggest an assignment to the very end of this period. Furthermore, a single olive stone found in the Stratum IIIB debris accumulation (L200) produced a 14C date of 3940–3640 BCE (95.4% probability; RTT-5958),[4] which appears to be very late in the Chalcolithic period, possibly one of the latest dates available for the Ghassulian phase of the Late Chalcolithic period. The flint assemblage associated with Stratum III (see Khalaily, this volume) is homogenous and, like the pottery, is typical of the Late Chalcolithic period.

The Chalcolithic faunal assemblage (see Maher, this volume) suggests a reliance on domesticated species of sheep/goat and cattle, and there is a 2:1 ratio of sheep to goats. The near absence of wild game coupled with the lack of stone points indicates a minimal reliance on hunted game in the inhabitants' diet.

The presence of *Chambardia rubens* shells in Stratum III (see Ktalav, this volume), probably originating from the Nile river, may indicate trade with Egypt as early as the Chalcolithic period. However, the overlying EB I culture, which also produced *Chambardia* shells, offers the possibility that these shells were imported during the later occupation of the site, and they had filtered into the earlier stratum.

After an extended occupation gap, the site was resettled in late EB I. Remains of this period were identified only in Areas A–C and assigned to Stratum II. In Area A, these cut into the previous Chalcolithic remains. In Areas B and C, it appears the EB remains were founded directly above the Chalcolithic stratum.

The majority of the Stratum II remains originate from Area C. The primary feature exposed is a building with rounded corners and an adjacent circular structure, which was probably intended for storage and may be interpreted as a granary (cf. Golani and Yannai 2016). Rounded corner structures are typical throughout the southern Levant at the end of the EB I period and into the very beginning of EB II (cf. Golani 1999). The present example from Beqoʿa is slightly different than most such buildings, which are usually larger, rectangular broadrooms with four rounded corners, often with an inner partition wall that creates at least two rooms. The example at Beqoʿa is also smaller and approximately square. Furthermore, two corners of the three exposed corners are rounded, but one is at a right angle, and no inner division was found.

The presence of a large storage facility, or granary, beside the structure with rounded corners and also assigned to Stratum II is

another recurring phenomenon of the late EB I in the southern Levant (cf. Golani and Yannai 2016). Circular structures, often interpreted as storage facilities, are common during late EB I, and are not a well-known feature of either early EB I or EB II. At all sites where found, these structures were located in proximity to domestic buildings, implying a concentrated storage of commodities by private households.

Remains of Stratum I, also dating to late EB I, were identified only in Area C. Stratum I represents a restructuring of the previous Stratum III, whose inhabitants recognized the previous buildings yet chose to fill them with stones. However, the nature of the Stratum I occupation remains unclear, and the very small amount of associated finds only serves to confirm the date of this occupation to late EB I, immediately succeeding Stratum II. The Stratum I ceramics are very similar in nature to those of Stratum II and also include Egyptianized, yet locally made, vessels (Fig. 27:16).

Similarly, the flint assemblage of Strata I and II is typical of EB I (see Khalaily, this volume). It is dominated by Canaanean blades and sickle blades, and is homogenous.

The faunal assemblage, though meager, indicates reliance on domesticated species including sheep/goat, cattle and pig (see Maher, this volume). The latter two suggest access to a water source in the immediate region.

APPENDIX 1. LOCUS REGISTER

Locus	Area/ Feature	Locus Above	Locus Below (n.e. = not excavated)	Description	Stratum
100	A	-	L105	Topsoil/tractor debris	-
101	B	-	L108	Topsoil removal	-
102	D	-	L107, L112	Topsoil/tractor debris	-
103	E	-	L106	Topsoil removal; exposure of stone surface	-
104	F	-	L109	Topsoil; removal; exposure of stones	-
105	A	L105	L111	Debris below topsoil	II-I
106	E	L103	L115	Surface make-up	-
107	D	L102	L120	Debris above surface	III?
108	B	L101	L114	Debris under topsoil	-
109	F	L104	-	Below topsoil; surface make-up	-
110	A	-	L111	Topsoil/tractor debris	II-I
111	A	L110	-	Debris on surface east of W1	III
112	D	L102	L121, L131	Combined into L107	III?
113	C	-	-	Balk trim	-
114	B	L108	L128	Debris below topsoil	-
115	E	L106	-	Probe into sterile alluvium	-
116	F	-	-	Topsoil removal; exposure of W3 to north of Area F	-
117	C	-	L139	Dark brown debris on surface east of W5	IIB
118	C	-	L123, L167	Debris above floor within Building 1	II-I
119	-	-	-	Locus canceled	-
120	D	L107	L136	Combined into L121	III
121	D	L112	L125	Debris on surface north of W8	III

APPENDIX 1. (cont.)

Locus	Area/ Feature	Locus Above	Locus Below (n.e. = not excavated)	Description	Stratum
122	A	L110	L127	Debris on surface south of W1	III
123	C	L118	L126	Debris and stone rubble above floor within Building 1	II-I
124	-	-	-	Locus canceled	-
125	D	L121	-	Surface make-up north of W8	III
126	C	L123	L129	Debris on floor within Building 1	II
127	A	L122	L133	Surface make-up	III
128	B	L114	L134	Light brown matrix; uncovering large stones	II-I
129	C	L126	L144	Combined into L126	II
130	A	L122	L132	Mixed debris upon surface west of W1	III
131	D	L112	-	Debris on surface southwest of W8	III
132	A	L130	-	Debris within northern pit	II-I
133	A	L127	-	Debris within southern pit	II-I
134	B	L128	L149	Combined into L128	II-I
135	C	-	L145	Debris on W7 and W18	II?
136	D	L120	-	Debris within pit	III
137	F122	-	L138	Removal of tractor debris; retrieval of burial remains (=L1004; Kogan-Zehavi 2016)	Persian?
138	F122	L137	L157, L158	Below topsoil; debris upon upper levels of cave floor (=L1011 from IAA Permit No. A-5486; Kogan-Zehavi, forthcoming)	III
139	C	L117	L142	Surface make-up east of W5	IIB
140	C	-	-	Removal of tractor debris to east of area	-
141	C	-	L146	Topsoil/tractor debris cleanup east of W5	-
142	C	L139	L156	Debris on surface east and below W5	III
143	C	-	-	Cleaning and defining stones of W4	-
144	C	L129, L126	L150	Floor make-up within eastern portion of Building 1	II
145	G	L135	L125, L153, L155	Combined into L135	II-I
146	C	L141	L154, L163	Debris on surface east of W5	IIA
147	-	-	-	Locus canceled	-
148	D	L121	-	Combined into L121	III
149	B	L134	L151	Debris above surface	III?
150	C	L144	L159	Within Building 1, below floor make-up	III
151	B	L140	-	Debris on surface	III
152	C	L145	-L194	Debris on floor within circular structure	IIB
153	C	L145	L197	Debris upon surface east of W18	IIB
154	C	L146	L160	Combined into L146	IIA
155	C	L145	-	Combined into L188	IIB
156	C	L142	n.e.	Surface make-up east and below W5	III
157	F122	L138	L169	Stone and earth debris within cave hollow	III?

APPENDIX 1. (cont.)

Locus	Area/ Feature	Locus Above	Locus Below (n.e. = not excavated)	Description	Stratum
158	F122	L138	L161	Combined into L157	III?
159	C	L150	L202	Combined into L202	Pre-III?
160	C	L154	-	Debris	III-II
161	F122	L158	L164	Combined into L157	III?
162	C	L153	-	Bedouin burial north of W4	-
163	C	L146	-	Combined into L146	IIA
164	F122	L161	L165	Combined into L157	III?
165	F122	L164	L170, L171	Debris within Chambers 1 and 2	III?
166	C	L153	n.e.	Combined into L197	IIB
167	C	L118	n.e.	Debris within stone installation in southeastern corner of Building 1	II
168	F122	L158	L169	Combined into L157	III?
169	F122	L168	L172	Combined into L157	III?
170	F122	L165	Bedrock	Debris on bedrock within Chamber 1	III
171	F122	L168	L176	Debris above bedrock in Chamber 2	III
172	F122	L169	L173	Debris within Chamber 3	III?
173	F122	L172	L175	Burial within Chamber 3	III
174	F122	L172	L175	Combined into L173	III
175	F122	L173	L177	Debris below burial of L173	III
176	F122	L171	Bedrock	Debris on bedrock at base of Chamber 2	III
177	F122	L175	Bedrock	Debris on bedrock in Chamber 3	III
178	F122	L175	Bedrock	Combined into L177	III
179	F122	L175	Bedrock	Combined into L177	III
180	C	-	L182	Topsoil removal	-
181	C	-	L183, L184	Topsoil removal	-
182	C	L180	L191	Debris on surface	IIA
183	C	L180	L188	Debris on rubble fill	I?
184	C	L181	L186	Debris on surface west of W11	I
185	C	L183	L194	Combined into L152	IIB
186	C	L184	L187	Surface make-up west of W11	I
187	C	L186	L195	Debris on surface next to W16	IIIA
188	C	L183	n.e.	Stone rubble and debris upon surface west of W18	IIB
189	C	L180	L190	Combined into L123	II-I
190	C	L189	n.e.	Combined into L126	II
191	C	L182	L193, L192	Surface make-up	II
192	C	L191	n.e.	Debris on surface	IIIA
193	C	L191	L199	Debris on surface	IIIA
194	C	L152, L185	n.e.	Floor make-up	IIB
195	C	L187	L196	Surface make-up	IIIA
196	C	L195	L203	Debris on surface	IIIB

APPENDIX 1. (cont.)

Locus	Area/ Feature	Locus Above	Locus Below (n.e. = not excavated)	Description	Stratum
197	C	L153	L198	Surface make-up	IIB
198	C	L197	n.e.	Debris on surface	IIIB
199	C	L193	L200	Surface make-up	IIIA
200	C	L199	n.e.	Debris on surface	IIIB
201	C	-	-	Balk trim	-
202	C	L159	Sterile alluvium	Debris on sterile alluvium	III
203	C	L196	L204	Surface make-up	IIIB
204	C	L203	L205	Debris of small stones	Pre-IIIB
205	C	L204	n.e.	Combined into L204	Pre-IIIB

NOTES

[1] For a preliminary report, see Golani 2010; Golani and Storchan 2010. Initial excavations were conducted during July–August 2008 (Permit No. A-5487) while a subsequent season (Permit No. A-5673) was conducted in June 2009. The second season of excavations was limited to expanding only Area C. Both excavations were carried out on behalf of the Israel Antiquities Authority at the request and with the financing of A. Barazani Construction Ltd., and were directed by Amir Golani and Benyamin Storchan with the assistance of Yossi Ohayon, Eli Bachar and Yeshayahu Lender (administration); Vadim Essman, Mark Kipnis, Mark Kounin and Tania Kornfeld (surveying); Yossi Nagar (physical anthropology); Tsila Sagiv (field photography); Pablo Betzer (archaeological inspector); Alla Nagorsky (district archeologist); Anna Eirikh-Rose (processing of Chalcolithic pottery); Natalya Zak (drafting); Olga Shorr and Roni Gat (ceramic restoration); Irena Lidsky-Reznikov and Michael Smilanski (artifact drawing); Hamoudi Khalaily (flint); Edward Maher (fauna); and Inbar Ktalav (mollusks).

[2] This excavation (Permit No. A-5412), was carried out during March and July 2008 and was directed by Elena Kogan-Zehavi.

[3] The osteological remains were examined in the field by Yossi Nagar, IAA anthropologist. A report concerning these remains may be obtained from the IAA archives upon request.

[4] The 14C date was provided by Dr. Elizabetta Boaretto of the Weizmann Institute of Science, Reḥovot.

REFERENCES

Adams J. 1989. Methods for Improving Ground Stone Artifact Analysis: Experiments in Mano Wear Patterns. In D.S. Amick and R.P. Mauldin eds. *Experiments in Lithic Technology* (BAR Int. S. 528). Oxford. Pp. 259–276.

Alon D. and Yekutieli Y. 1995. The Tel Ḥalif Terrace 'Silo Site' and Its Implications for the Early Bronze Age I. *'Atiqot* 27:149–189.

Amiran R. 1955. The 'Cream Ware' of Gezer and the Beersheba Late Chalcolithic. *IEJ* 5:240–245.

Amiran R. 1969. *Ancient Pottery in the Holy Land, from Its Beginnings in the Neolithic Period to the End of the Iron Age*. Jerusalem–Ramat Gan.

Amiran R. and Brink E.C.M. van den. 2001. A Comparative Study of the Egyptian Pottery from Tel Ma'aḥaz, Stratum I. In S.R. Wolff ed. *Studies in the Archaeology of Israel and Neighboring Lands in Memory of Douglas L. Esse* (SAOC 59/ ASOR Books 5). Chicago–Atlanta. Pp. 29–58.

Avrutis V.W. 2012. *Late Chalcolithic and Early Bronze Age I: Remains at Nesher-Ramla Quarry.* Haifa.

Baumgarten Y.Y. 2004. An Excavation at Ashqelon Afridar—Area J. *'Atiqot* 45:161–184.

Beck P. 2000. Area B: Pottery. In M. Kochavi. *Aphek-Antipatris* I: *Excavation of Areas A and B; The 1972–1976 Seasons* (Tel Aviv University Institute of Archaeology Monograph Series 19). Tel Aviv. Pp. 93–133.

Be'eri R. and Paz Y. In press. Excavations at Ḥorbat 'Illin Taḥtit, the 2013 Season. *'Atiqot*.

Braun E. 1990. Basalt Bowls of EB I Horizon in the Southern Levant. *Paléorient* 16/1:87–96.

Braun E. Forthcoming. Excavations at Ḥorbat 'Illin (Lower).

Braun E. and Gophna R. 2004. Excavations at Ashqelon, Afridar—Area G. *'Atiqot* 45:185–241.

Braun E., Brink E.C.M. van den, Gophna R. and Goren Y. 2001. New Evidence for Egyptian Connections during a Late Phase of Early Bronze I from the Soreq Basin in South-Central Israel. In S.R. Wolff ed. *Studies in the Archaeology of Israel and Neighboring Lands in Memory of Douglas L. Esse* (SAOC 59/ASOR Books 5). Chicago–Atlanta. Pp. 59–97.

Burton M.M. and Levy T.E. 2011. The End of the Chalcolithic Period (4500–3600 BC) in the Northern Negev Desert, Israel. In J.L. Lovell and Y.M. Rowan eds. *Culture, Chronology and the Chalcolithic: Theory and Transition* (*Levant* Suppl. S. 9). Oxford–Oakville. Pp. 178–191.

Commenge-Pellerin C. 1987. *La poterie d'Abou Matar et de l'Ouadi Zoumeili (Beershéva) au IVe millénaire avant l'ère chrétienne* (Les Cahiers du CRFJ 3). Paris.

Commenge-Pellerin C. 1990. *La poterie de Safadi (Beershéva) au IVe millénaire avant l'ère chrétienne* (Les Cahiers du CRFJ 5). Paris.

Commenge C. 2006. Gilat Ceramics: Cognitive Dimensions of Pottery Production. In T.E. Levy ed. *Archaeology, Anthropology and Cult: The Sanctuary at Gilat, Israel.* London–Oakville. Pp. 394–506.

Dessel J.P. 1991. *Ceramic Production and Social Complexity in Fourth Millennium Canaan: A Case Study from the Ḥalif Terrace.* Ph.D. diss. University of Arizona. Tucson.

Garfinkel Y. 1999. *Neolithic and Chalcolithic Pottery of the Southern Levant* (Qedem 39). Jerusalem.

Gilead I. 2011. Chalcolithic Culture History: Ghassulian and Other Entities in the Southern Levant. In J.L. Lovell and Y.M. Rowan eds. *Culture, Chronology and the Chalcolithic: Theory and Transition* (*Levant* Suppl. S. 9). Oxford–Oakville. Pp. 12–24.

Gilead I. and Goren Y. 1995. The Pottery Assemblages from Grar. In I. Gilead ed. *Grar: A Chalcolithic Site in the Northern Negev* (Beer-Sheva VII). Be'er Sheva'. Pp. 137–221.

Golani A. 1999. New Perspectives on Domestic Architecture during the Initial Stages of Urbanization in Canaan. *Levant* 31:123–133.

Golani A. 2004. Salvage Excavations at the Early Bronze Age Site of Ashqelon, Afridar—Area E. *'Atiqot* 45:9–62.

Golani A. 2008. The Early Bronze Age Site of Ashqelon, Afridar—Area M. *'Atiqot* 60:19–51.

Golani A. 2010. Beqo'a—A New Proto-Historic Site in the Judean Foothills. In D. Amit, O. Peleg-Barkat and G. Stiebel eds. *New Studies in the Archaeology of Jerusalem and Its Region* 4. Jerusalem. Pp. 24*–31*.

Golani A. 2011. Beqo'a. *HA–ESI* 123. (August 28). http://www.hadashot-esi.org.il/report_detail_eng.aspx?id=1783&mag_id=118 (accessed August 7, 2017).

Golani A. Forthcoming (a). *Ashqelon, Barne'a. The Early Bronze Age Site* I: *The Site and Its Excavation* (IAA Reports).

Golani A. Forthcoming (b). *Ashqelon, Barne'a. The Early Bronze Age Site* II: *The Finds* (IAA Reports).

Golani A. Forthcoming (c). Excavations at Eshta'ol—Area D. *'Atiqot*.

Golani A. and Storchan B. 2010. Beqo'a. *HA–ESI* 122 (February 26). http://www.hadashot-esi.org.il/report_detail_eng.aspx?id=1340&mag_id=117. (accessed August 7, 2017).

Golani A. and Yannai E. 2016. Storage Structures of the Late Early Bronze I in the Southern Levant and the Urbanisation Process. *PEQ* 148:8–41.

Gophna R. 1976. Excavations at 'En Besor. *'Atiqot* (*ES*)11:1–9.

Gophna R. and Iron-Lubin M. 1996. The Pottery Assemblages. In R. Gophna. *Excavations at Tel Dalit: An Early Bronze Age Walled Town in Central Israel.* Tel Aviv. Pp. 81–134.

Gophna R. and Paz Y. 2008. Ḥorvat Shovav—A Fortified Urban Settlement from the Early Bronze Age in the Judaean Shephelah. In S. Bar ed. *In the Hill-Country, and in the Shephelah, and in the*

Arabah (Joshua 12, 8): Studies and Researches Presented to Adam Zertal in the Thirtieth Anniversary of the Manasseh Hill-Country Survey. Jerusalem. Pp. 55–63 (Hebrew).

Hamilton T.P. 1993. Economics with an Entreprenurial Spirit: Early Bronze Trade with Late Predynastic Egypt. *BA* 56:81–93.

Kempinski A. and Gilead I. 1991. New Excavations at Tel Erani: A Preliminary Report of the 1985–1988 Seasons. *Tel Aviv* 18:164–191.

Khalaily H. 2004. An Early Bronze Age Site at Ashqelon, Afridar—Area F. *'Atiqot* 45:121–159.

Khalaily H. This volume. Chalcolithic and Early Bronze Age IB Flint Assemblages from Beqo'a.

Kogan-Zehavi E. 2016. Khirbat el Meisiya. *HA–ESI* 128 (March 30). http://www.hadashot-esi.org.il/report_detail_eng.aspx?id=24938&mag_id=124. (accessed June 11, 2017).

Ktalav I. This volume. Chalcolithic and Early Bronze IB Mollusks from Beqo'a.

Levy T.E. ed. 1987. *Shiqmim* I: *Studies concerning Chalcolithic Societies in the Northern Negev Desert, Israel (1982–1984)* (BAR Int. S. 356) (2 vols.). Oxford.

Levy T.E. and Menachem N. 1987. The Pottery from the Shiqmim Village: Typological and Spatial Considerations. In T.E. Levy ed. *Shiqmim* I: *Studies concerning Chalcolithic Societies in the Northern Negev, Israel (1982–1984)* (BAR Int. S. 356). Oxford. Pp. 313–331.

Lovell J.L. 2001. *The Late Neolithic and Chalcolithic Periods in the Southern Levant: New Data from the Site of Teleilat Ghassul, Jordan* (BAR Int. S. 974; Monographs of the Sydney University Teleilat Ghassul Project I). Oxford.

Macalister R.A.S. 1912. *The Excavation of Gezer, 1902–1905 and 1907–1909* I–III. London.

Maher E.F. This volume. Chalcolithic and Early Bronze Age IB Fauna from Beqo'a.

Milevski I., Vardi, J., Gilead I., Eirikh-Rose A., Birkenfeld M., Mienis H.K. and Horwitz L.K. 2013. Excavations at Ḥorbat 'Illit B: A Chalcolithic (Ghassulian) Site in the Haelah Valley. *JIPS* 43:73–147.

Oren E.D. and Yekutieli Y. 1992. Taur Ikhbeineh: Earliest Evidence for Egyptian Interconnections. In E.C.M. van den Brink ed. *The Nile Delta in Transition: 4th–3rd Millennium B.C. (Proceedings of the Seminar Held in Cairo, 21–24. October 1990, at the Netherlands Institute of Archaeology and Arabic Studies).* Tel Aviv. Pp. 361–384.

Rosenberg D. Forthcoming. The Groundstone Assemblage of Ashqelon Barne'a. In A. Golani. *Ashqelon Barne'a. The Early Bronze Age Site* II: *The Finds* (IAA Reports).

Rowan Y.M. 1998. *Ancient Distribution and Deposition of Prestige Objects: Basalt Vessels during Late Prehistory in the Southern Levant* (2 vols.). Ph.D. diss. University of Texas. Austin.

Rowan Y.M. and Golden J. 2009. The Chalcolithic Period of the Southern Levant: A Synthetic Review. *JWP* 22:1–92.

Scheftelowitz N. 2004. The Pottery Assemblage. In N. Scheftelowitz and R. Oren. *Giv'at Ha-Oranim: A Chalcolithic Site* (Salvage Excavation Reports 1). Tel Aviv. Pp. 37–58.

Stern E. 1982. *Material Culture of the Land of the Bible in the Persian Period 538–332 B.C.* Warminster–Jerusalem.

Yekutieli Y. 2000. Early Bronze Age I Pottery in Southwestern Canaan. In G. Philip and D. Baird eds. *Ceramics and Change in the Early Bronze Age of the Southern Levant* (Levantine Archaeology 2). Sheffield. Pp. 129–152.

Yekutieli Y. 2002. The Ceramic Assemblage of Level C of the Early Bronze Age IB1 in Area DII at Tel Erani. In E.D. Oren and S. Ahituv. *Aharon Kempinski Memorial Volume: Studies in Archaeology and Related Disciplines* (Beer-Sheva XV). Be'er Sheva'. Pp. 59*–79* (Hebrew).

Yekutieli Y. 2006. The Ceramics of Tel 'Erani, Layer C. *Journal of the Serbian Archaeological Society* 22:225–242.

Yekutieli Y. and Gophna R. 1994. Excavations at an Early Bronze Age Site near Nizzanim. *Tel Aviv* 21:162–185.