'Atiqot 94, 2019

Variability of the Ground Stone Artifacts from Ḥorbat Nevallaṭ

Yorke M. Rowan

A total of 120 ground stone artifacts were recovered from the excavations at Ḥorbat Nevallaṭ (see van den Brink and Lazar, this volume). These are classified according to similar criteria as those outlined by Wright (1992a; 1992b) and further modified based on other reports of late prehistoric ground stone assemblages excavated in the Southern Levant (Gopher and Orelle 1995; Milevski 1998; Rowan 1998; 2003; 2005; 2007; 2014b). These artifacts are described below, with a summary in Table 1 and illustrations of about 75% of the material (Figs. 1–14).

Table 1. Ground Stone Artifact Types and Counts[i]

Area / Type	A	B	C			Unknown	Total per Type		*Total MNI*	
Condition	F	F	F	C	I	F	N	%	*N*	%
Grinding Slabs	3		2	1			6	5.00	*6*	*8.70*
Grinding Slab/ Handstone?	1						1	0.83	*1*	*1.45*
Handstones	1		4	3	1		9	7.50	*9*	*13.04*
Handstones?			3				3	2.50	*3*	*4.35*
Hammerstones/ Pounders	1		1	4	1		7	5.83	*7*	*10.14*
Other Tools	1		1				2	1.67	*2*	*2.90*
Perforated Stones	10		2	1		4	17	14.17	*17*	*24.64*
Mortars	3		1				4	3.33	*4*	*5.79*
Ground Stone Fragments?	1		2				3	2.50		
Smooth Pebbles	1		2				3	2.50	*3 ?*	*4.35*
Vessels	50	8	5			2	65	54.17	*17*	*24.64*
Total per Area (N)	*72*	*8*	*23*	*9*	*2*	*6*	*120*	*100.00*	*69*	*100.00*
			34							
% by Area	*60.00*	*6.67*	*28.33*	*5.00*				*100.00*		

[i] F = fragment; C = complete profile; I = incomplete; MNV = minimum number of vessels

THE ASSEMBLAGE

Grinding Slabs (Fig. 1:1–5; n = 6)
Grinding slabs are the lower immobile stone (*metate*), on which grains, minerals, pottery and other materials were placed for grinding with an upper, more mobile instrument (handstone, or *mano*), generally also made of stone. One example from Nevallaṭ was complete and the others are fragments. Two were made of basalt, two of beachrock (coquinoidal sandstone), and one each of limestone and chalk. Grinding slabs are commonly found at Chalcolithic habitation sites, such as Gerar (Gilead 1995: Fig. 7.4:3–5), Ḥorbat Beter (Dothan 1959: Fig. 19.9), Teleilat Ghassul (Koeppel 1940:112; Lee 1973:268, LB21a; Mallon, Koeppel and Neuville 1934: Fig. 22), Newe Ur (Perrot, Zori and Reich 1967: 217) and sites in the Golan (Epstein 1998: Pl. XXXIX). The low number of grinding slabs at a site such as Ḥorbat Nevallaṭ, where there are many handstones and other, smaller ground stone artifacts, probably reflects the function of bedrock stone installations serving in the capacity of grinding slabs (see van den Brink and Lazar, this volume). The presence of basalt grinding slabs at a site relatively distant from any possible source is interesting. Even though only two were found at Ḥorbat Nevallaṭ, basalt grinding slabs are quite rare even at large Chalcolithic sites with hundreds of grinding slabs and fragments (e.g., Gilat and Shiqmim, each site yielding only one basalt grinding slab of basalt).

Grinding Slab or Handstone Fragment (Fig. 1:6; n = 1)
This is a category typically encountered in most assemblages, where clearly utilized grinding fragments are sometimes difficult to classify.

Handstones (Fig. 2:1–8; n = 9)
Handstones are the upper, mobile stone used for grinding matter. Although the lower grinding slabs are usually easy to recognize by their mass and the concave surface wear patterns, the upper mobile stones vary in their morphology. For this reason, the category of handstones may include both those artifacts used in conjunction with the grinding slabs, as well as other stones used as grinding implements. The morphology is thus more varied for the classification of handstones, which include other, smaller cobbles, potentially used for other grinding tasks. Examples of handstones are documented from Chalcolithic sites such as Gerar (Gilead 1995: Fig. 7.4:1, 2), Newe Ur (Perrot, Zori and Reich 1967: Fig. 13:11–13), Tel Te'o (Gopher and Eisenberg 2001: Fig. 9.3:1–3) and Teleilat Ghassul (Lee 1973:270, Figs. LB 25:a–d).

Handstones? (Fig. 2:9–11; n = 3)
Three additional fragments may be the remains of handstones, but the absence of discernible wear attributes and irregular morphology precludes confident classification.

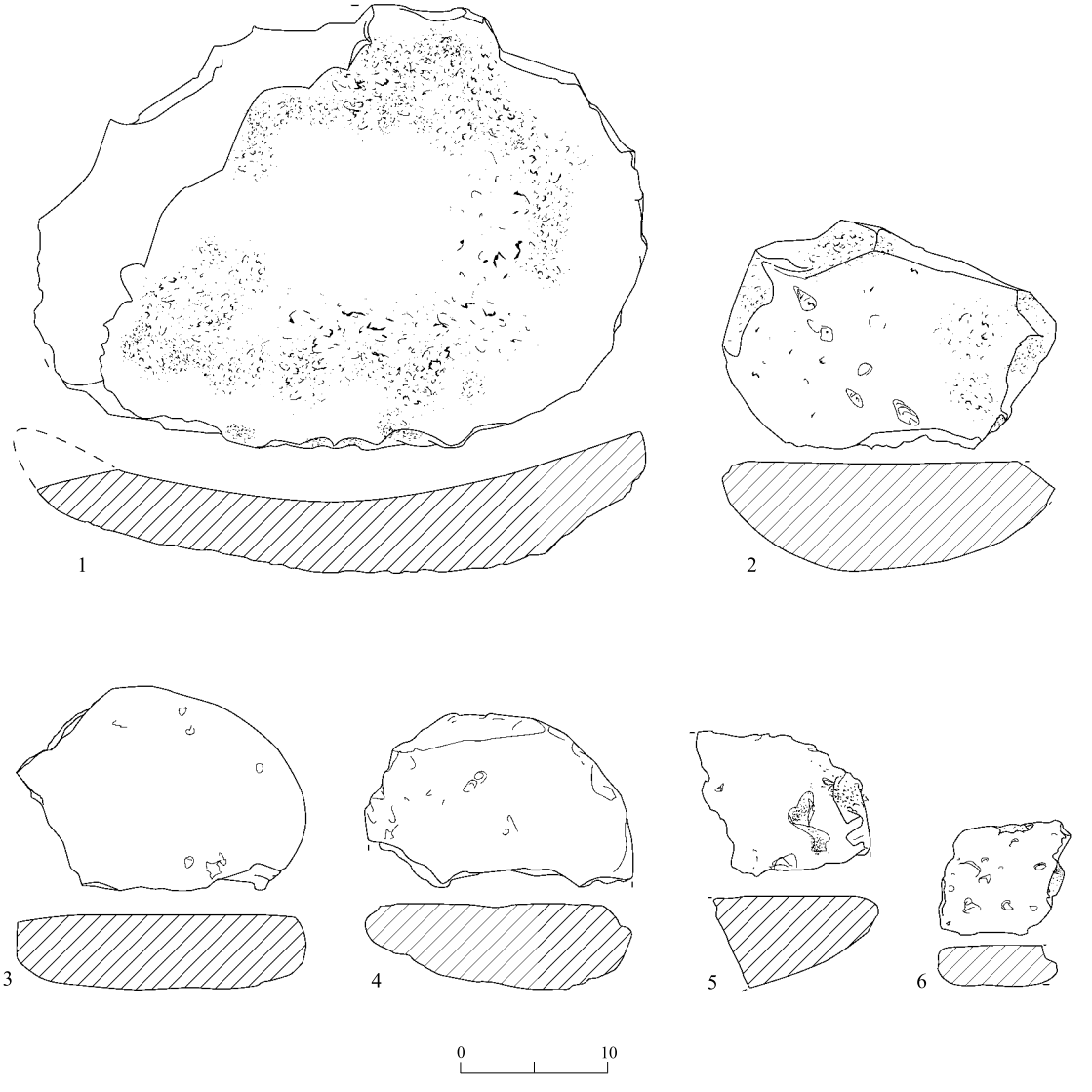

Fig. 1. Grinding slabs.

No.	Artifact	Area	Locus	Basket	Description
1	Grinding slab	C	218		Unifacial, limestone, edges roughly chipped
2	Grinding slab	A	184	4331	Unifacial, beachrock
3	Grinding slab	C	225	4372	Unifacial, beachrock, flat and smooth working surface
4	Grinding slab	C	216	4352	Unifacial, limestone
5	Grinding slab	A	184		Unifacial, basalt
6	Grinding slab/ handstone?	A	104	4008	Probably unifacial use, vesicular basalt

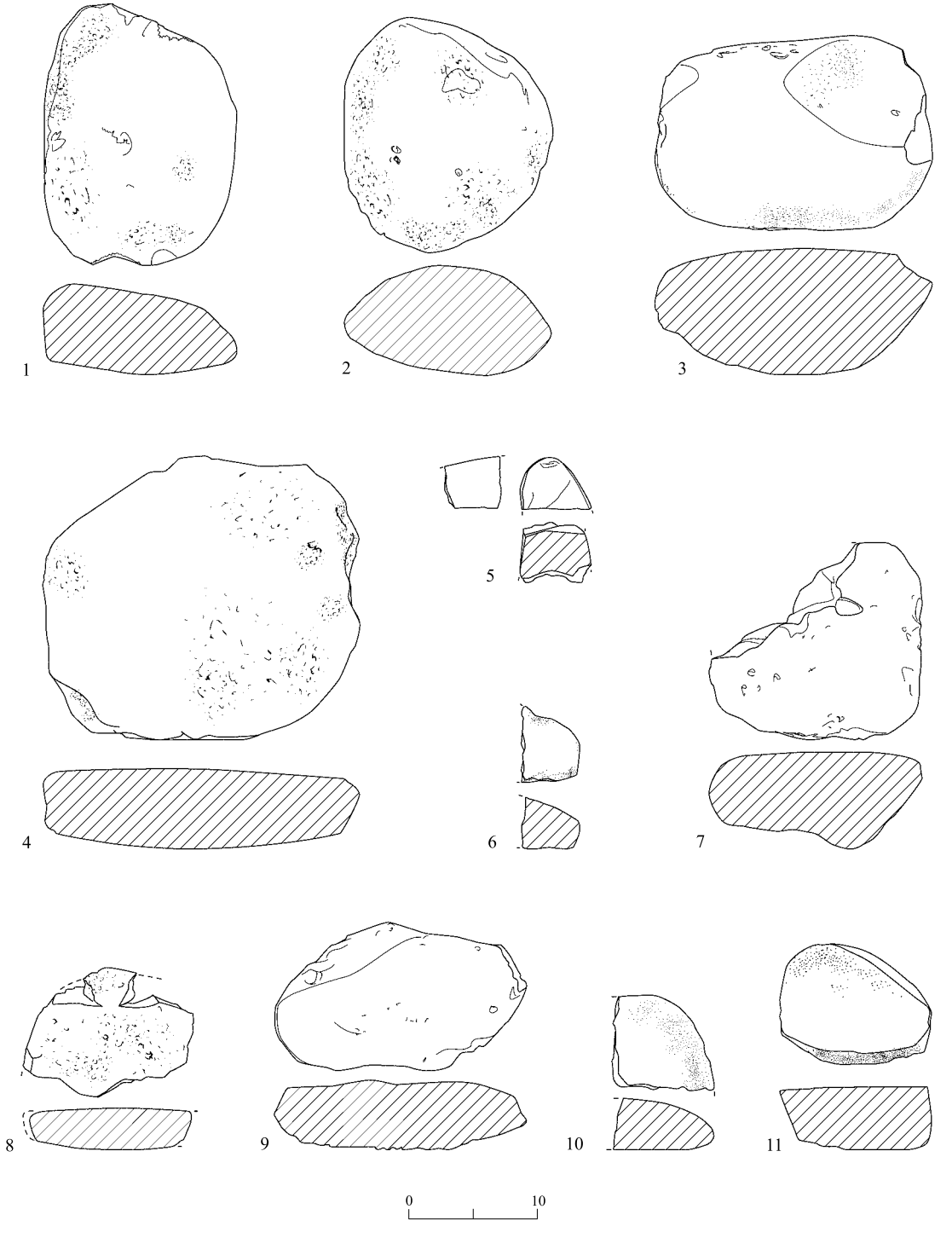

Fig. 2. Handstones.

◂ **Fig. 2**

No.	Artifact	Area	Locus	Basket	Description
1	Handstone	C	216	4352	Bi-convex, limestone
2	Handstone	C	224	4380	Bifacial use, limestone
3	Handstone	C	224	4365	Bifacial use? chalk
4	Handstone	C	218		Bifacial, flat, limestone
5	Handstone	C	210	4354	Edge fragment, limestone
6	Handstone	C	212	4348	Edge fragment, beachrock
7	Handstone	C	213	4355	Unifacial, beachrock
8	Handstone	A	149	4229	Bifacial, basalt
9	Handstone?	C	225	4372	Irregular shape, no clear wear, chalkstone
10	Handstone?	C	227	4363	Edge fragment, beachrock
11	Handstone?	C	218	4360	Unifacial? limestone

Hammerstones/Pounders (Fig. 3:1–5; n = 7)
Hammerstones and pounders, defined by evidence for battering and crushing on the surface of hand-sized nodules, are common in prehistoric and historic sites. Termed ‘pounders’ in Wright’s typology (Type E; Wright 1992a:70), these nodules are divided according to morphology (i.e., spheroid, cuboid, irregular). Some scholars might divide ‘pecking stones’ from hammerstones (Adams 2002:151–153), while others might have a variety of subtypes for ‘hammering’ that include hammerstones, anvils and hammerstone/rubbers (Hamon 2008). Those found at Ḥorbat Nevallaṭ, made of basalt, flint, limestone and beachrock, are lithologically diverse for such a small sample. Typical of this type of artifact, the size range is very limited, deviating from the mean by only about 20 mm in maximum size. Although commonly found at prehistoric sites (Rosen 1997:101), hammerstones and pounders are rarely documented in quantified fashion, and only minimally illustrated. This is changing, however, as ground collection and reporting becomes standard, such as at ‘En Esur (‘Ein Asawir; Rowan 2006), Qiryat Ata (Rowan 2003), Gilat (Rowan et al. 2006) and Abu Ghosh (Khalaily and Marder 2003). Hammerstones were also noted at Teleilat Ghassul (Lee 1973:260, Fig. LA41:a), and pounders, at Tel Te’o (Gopher and Eisenberg 2001: Fig. 9.4:11). Similar stones, collected from various Golan sites, were also reported (Epstein 1998: Pl. XLI.10–23).

Other Tools (Fig. 3:6, 7; n = 2)
Two fragments may have served as pestles, although neither fits the standard morphology and both are made of chalkstone. One—a rough conical piece—has a relatively flat base (Fig. 3:6). The other has a smoothed naviform (ogival) shape at one end; the other end is chipped and broken (Fig. 3:7). The function of both implements is unclear, and neither neatly fits a pestle classification.

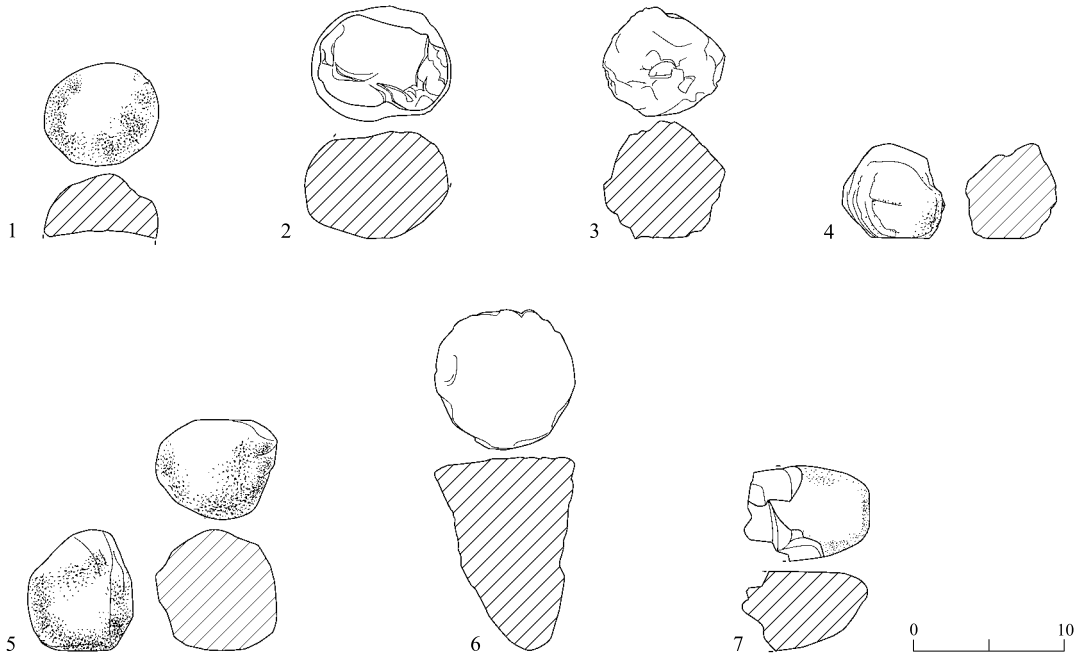

Fig. 3. Hammerstones and others.

No.	Artifact	Area	Locus	Basket	Description
1	Hammerstone	C	212	4348	Sphere fragment, beachrock
2	Hammerstone	C	206	4370	Ovoid, battered, limestone
3	Hammerstone	C	201	4350	Worn, limestone
4	Hammerstone	C	201	4350	Angular, smooth, wear unclear, flint
5	Hammerstone	C	201	4350	Angular, slight battering wear, limestone
6	Other	C	227	4363	Pestle? chalkstone
7	Other	A	105	4015	Pestle? possibly worn, flaked, chalkstone

Perforated Stones (Fig. 4; n = 17)

A number of drilled objects were recovered—all fragments. Although this is a small assemblage, two general size ranges were identified based on the maximum exterior diameter or length. The smaller examples (Fig. 4:1–8), ranging in diameter from 50 to 90 mm, are perhaps more carefully made, and most appear to be roughly circular (Fig. 4:2–8). Notably, only a few seem balanced and symmetrical enough to serve as spindle whorls (e.g., Fig. 4:2, 3), unless these are unfinished examples. A few fragments are such thin spalls that no estimate for their original size or shape is possible (Fig. 4:9–11). The larger drilled artifacts (Fig. 4:12–17), ranging in size from 110 to 150 mm, are less regular in outline and cross-section, with little effort made to achieve a circular or symmetrical form. One example, made of coquinoidal sandstone (Fig. 4:12), probably functioned initially as a small unifacial handstone, but was bifacially drilled for a secondary function. Perforated stone artifacts

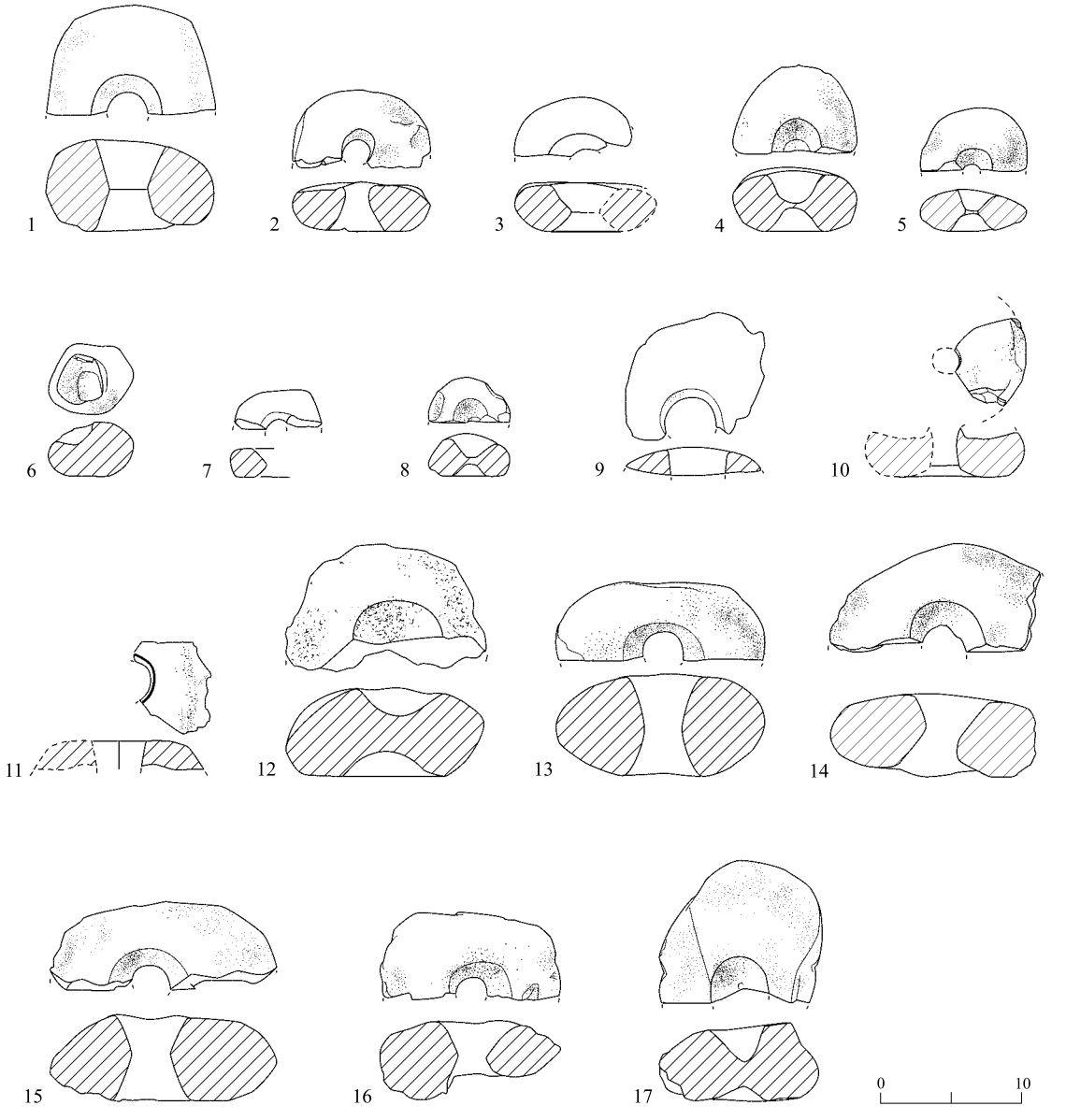

Fig. 4. Perforated stones.

are typically found at Chalcolithic sites, such as Tell Abu Maṭar (Perrot 1955:78, Pl.13:B; Commenge, in press), Gerar (Gilead 1995: Fig. 8.1:1–3), Ḥorbat Beter (Dothan 1959: Fig. 19:15–18), Shiqmim (Levy and Holl 1987:403, Figs. 15.15:1; 15.16:1, 2), Teleilat Ghassul (Mallon, Koeppel and Neuville 1934: Pl. 34:1; Lee 1973:274, LB42h–j), Tel Te'o (Gopher and Eisenberg 2001: Figs. 9.1:15–18; 9.3:10; 9.4:7; 9.5:8) and the Golan sites (Epstein 1998: Pl. XLIII:1–12).

◂ **Fig. 4**

No.	Area	Locus	Basket	Description
1	C	221	4363	Bifacial, smoothed, chalkstone
2				
3				
4	A	166	4273	Bifacial, limestone
5	A	117	4076	Bifacial, limestone
6	C	218	4360	Limestone pebble, concavity probably natural
7	A	101	4013	Bifacial, limestone
8		18		Bifacial, basalt
9	A	107	4016	Limestone, thin fragment
10	A	179	4337	Basalt, narrow fragment
11	A	117	4053	Basalt, thin fragment
12		Surface		Bifacial, beachrock
13	A	107	4016	Bifacial, shaped and smooth, limestone
14	A	149	4247	Bifacial, smoothed, limestone
15	A	117	4079	Bifacial, limestone
16	A	103	4004	Bifacial, rounded square, limestone
17	C	213	4355	Drilled but not perforated, smoothed, chalkstone

Mortars (Fig. 5:1, 2; n = 4)

The low number of mortars at Ḥorbat Nevallaṭ is not unusual for late prehistoric sites in the Southern Levant. The mortar count in any given assemblage seems contingent upon a variety of factors, including the typological criteria utilized by the particular analyst. The distinction between well-made mortars and cruder stone bowls is ambiguous at best, and typically not defined. Shallow concavities on bedrock outcrops—often called 'cupmarks' (Gilead 1995: Fig. 7.3:13)—are frequently found at late prehistoric sites, and the total counts are affected by whether or not these are considered a mortar subcategory. The deeply carved, circular cupmarks at the site may have served this purpose.

The four examples of mortars from Ḥorbat Nevallaṭ include fragments from the sides of three chalkstone vessels (e.g., Fig. 5:1) and one limestone fragment, which provides a full profile from rim to base (Fig. 5:2). The latter has a thick base (c. 59 mm) with a height of 155 mm. The depth of the vessel was about 95 mm, and its exterior rim diameter is about 160 mm. This fragment highlights the typological problem of how best to distinguish between a bowl and a mortar. The shapes of these vessel types are similar; neither has a distinctive rim or base. Wright (1992:66) defines a bowl mortar as having a pecked exterior but lacking an intentionally shaped rim or base. Our example in Fig. 5:2 fits this description well.

Mortars are a diverse category of artifacts, from well-made vessels to shallow indentations or ad hoc concavities on otherwise unmodified pebbles. A variety of examples are published from sites, such as Ḥorbat Beter (Dothan 1959: Figs. 11:1–3, 5, 6; 19:6; 24; 26; 27), Teleilat Ghassul (Mallon, Koeppel and Neuville 1934: Pl. 34:1), Gerar (Gilead 1995: Fig. 7.3:4, 6,

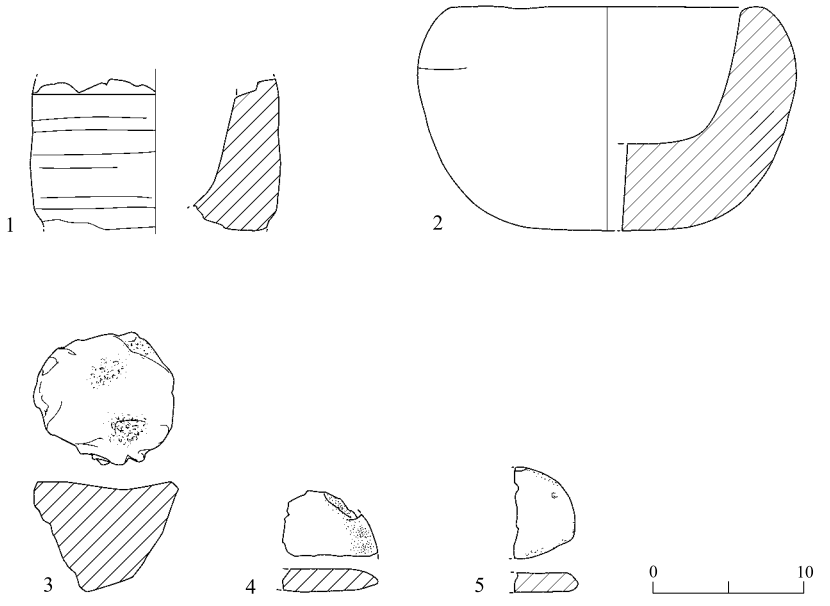

Fig. 5. Mortars, ground stone fragments and pebble.

No.	Artifact	Area	Locus	Basket	Description
1	Mortar	A	181	4329	Wall fragment of shaped chalk, base possibly worn through
2	Mortar	C	210	4378	Rim-to-base fragment, convex wall profile, limestone
3	Ground stone fragment	C	213	4355	
4	Ground stone fragment	A	105	4015	Cobble edge fragment, limestone
5	Pebble	A	144	4203	Smooth, possibly natural

11, 13), ‘En Esur (Rowan 2006: Figs. 6.4:3, 5, 7; 6.6:2) and sites in the Golan (Epstein 1998: Pl. XXXVIII:4–9), where they are made of locally available basalt.

Ground Stone Fragments? (Fig. 5:3, 4; n = 3)
It is unclear whether or not two stone fragments were utilized as tools (Fig. 5:3, 4). A third example (not illustrated) exhibits clear smoothing from use on one face.

Smooth Pebbles (possible artifacts; Fig. 5:5; n = 3)
Unlike smoothed and polished pebbles reported from other sites, which may have served as burnishers or game pieces (Rowan et al. 2006), the three pebbles found at the site may well be entirely natural and unused.

Vessels (Figs. 6–10; n = 65)
The majority (77%) of the stone bowls was recovered from Area A; all pedestalled vessels on fenestrated stands (henceforth referred to as ‘fenestrated stands’) were found in this area as well (Table 2). The vessels were made of basalt, with the sole exception of a rim fragment

Table 2. Stone Bowl Fragments

No.	Locus	Basket	Stone Type	Length (mm)	Width (mm)	Thickness (mm)	Estimated Diameter (mm)	Description	Fig. No.
Rim Fragments									
1	101	4001	Basalt	48	37	13		R2a rim type; widely flared; moderately ground	6:6
2	101	4030	Basalt	50	48	17	240	R2a rim type; widely flared; moderately ground	6:4
3	106	4012	Basalt	52	16	14		Rim; moderately ground; low vesicularity	
4	106	4005	Basalt	42	31	13		R2a rim type	
5	107	4016	Basalt	66	35	15		R2a rim type; widely flared; probably same as L107, B4016	
6	107	4016	Basalt	79	31	13		R2a rim type; widely flared; moderately ground	
7	107	4016	Basalt	97	43	17		R2a rim type; widely flared, joins with L115, B4050 and L107, B4016	8:5
8	107	4016	Basalt	63	47	23		Upright, pointed, non-flared rim	
9	107	4016	Basalt	177	85	19	400	R2a rim type; joins with L115, B4050; fragmentary interior chevrons; mend hole	8:5
10	110	4033	Basalt	61	52	17		Rim; moderately ground; low vesicularity	
11	110	4033	Basalt	32	34	14		R2a rim type; interior chevron design; widely flared	7:6
12	111	4052	Basalt	68	55	15		R1a(?) rim type; flared; moderately ground; chipped rim	6:9
13	117	4071	Basalt	51	41	20	150	Rim; elaborate decoration	
14	117	4054	Basalt	60	54	14		R2a rim type; widely flared, open, pointed	7:2
15	128	4102	Basalt	43	36	13		Rim; moderately ground; low vesicularity	
16	130	4108	Basalt	65	62	11		R2a rim type; widely flared; moderately ground	7:4
17	130	4113	Phosphorite	138	70	25		R2a rim type; crude, coarsely ground	6:5

Table 2. (cont.).

No.	Locus	Basket	Stone Type	Length (mm)	Width (mm)	Thickness (mm)	Estimated Diameter (mm)	Description	Fig. No.
18	133	4120	Basalt	225		11	360	Rim of bowl; chevron on interior and exterior; 12 fragments conjoined	8:1–3
19	134	4148	Basalt	57	52	16	380	R2a rim type; widely flared; moderately ground; interior chevron	7:5
20	134	4121	Basalt	42	26	12		R2a rim type; widely flared; moderately ground; interior chevron	6:1
21	145	4211	Basalt	45	30	15		R1a(?) rim type; small diameter	
22	166	4273	Basalt	105	67	17		R2a rim type; widely flared; moderately ground	7:1
23	166	4306	Basalt	45	27	13		R2a rim type; widely flared; chevron	6:2
24	179	4337	Basalt	37	35	11		R2a rim type; widely flared; fine, well-ground	6:3
25	210	4378	Basalt					R2a rim type; flared	8:4
26	212	4348	Basalt	114			380	R2a rim type; widely flared	7:7
27	224	4365	Basalt	63	47	21	120–180	Slight signs of grinding on rim	6:11
28	226	4373	Basalt	47	39	16		R2a rim type; flared	7:3
29	147	4221	Basalt				200	R4b(?) rim type; two conjoined pieces	6:10
30	Feature 14		Basalt	73	65	20		R1c(?) rim type; moderately ground; low vesicularity	6:7
Wall Fragments									
31	110	4052	Basalt	68	54	17		Moderately ground; low vesicularity	9:4
32	115	4062	Basalt	67	41	16		Moderately ground; low vesicularity	
33	125	4092	Basalt	78	61	19		Moderately ground; low vesicularity	
34	125	4092	Basalt	48	33	19		Moderately ground; low vesicularity	
35	128	4101	Basalt	55	51	23		Moderately ground; low vesicularity	
36	134	4147	Basalt	43	21	25		Vessel wall?	
37	145	4215	Basalt	67	45	15		Moderately ground; moderate vesicularity	

Table 2. (cont.).

No.	Locus	Basket	Stone Type	Length (mm)	Width (mm)	Thickness (mm)	Estimated Diameter (mm)	Description	Fig. No.
38	151	4239	Basalt	44	23	18		Rough; moderate vesicularity	
39	167	4278	Basalt	68	50	23		Well-ground	9:2
40	184	4331	Basalt	66	53	18		Decoration, four raised bands	9:3
41	316	3002	Basalt	95	82	12		Three wall fragments conjoined; widely flared; well-ground	9:8
42	321	3025	Basalt	46	27	10		Wall fragment	9:5
43	322	3049	Basalt	65	65	14		Wall fragment; conjoins with L322, B3045	9:1
44	322	3045	Basalt	99	57	11		Wall fragment	9:1
45	322	3045	Basalt	65	57	11		Wall fragment	9:1
46	322	3045	Basalt	73	65	12		Wall fragment	9:1
47	322	3045	Basalt	50	50	12		Wall fragment	9:1
48	none	none	Basalt	40	34	20		Decoration, probably parallel incisions	9:6
Base Fragments									
49	157	4251	Basalt	116	96	19 Base: 29	90	Flat base; widely flared, straight walls	9:9
50	157	4251	Basalt	64	54	16 Base: 32	70–80	Flat base; widely flared, straight walls	9:10
51	167	4269	Basalt	68	53	16 Base: 20	140	Flat base; widely flared open form	9:7
52	316	3002	Basalt					Flat base; widely flared open form	

(Fig. 6:5) of a phosphorite bowl. Phosphorite, a sedimentary rock, has been recognized only recently in some stone-vessel assemblages; its relatively uncommon occurrence apparently reflects an occasional crude imitation of basalt vessels (Gilead and Goren 1989; Goren 1991). The phosphorite vessel fragment from Ḥorbat Nevallaṭ may be the most northerly example documented to date.

Although 30 rim fragments of basalt bowls were recovered, only about 8 are sufficiently complete to estimate the original rim diameter (see Table 2). These fall into two broad groups: one of a small size range (120–200 mm; n = 4; Fig. 6:8–11), and another, larger group (n = 4; Figs. 7:2, 7; 8:1), with rim diameters ranging from 360 to 400 mm. An additional rim fragment falls between these two groups, with an estimated diameter of 240 mm (Fig. 6:4). Such a small sample size does not enable the drawing of broad conclusions; nonetheless, this tentative pattern in size groups seems worthy of mention for comparison to other basalt vessel assemblages.

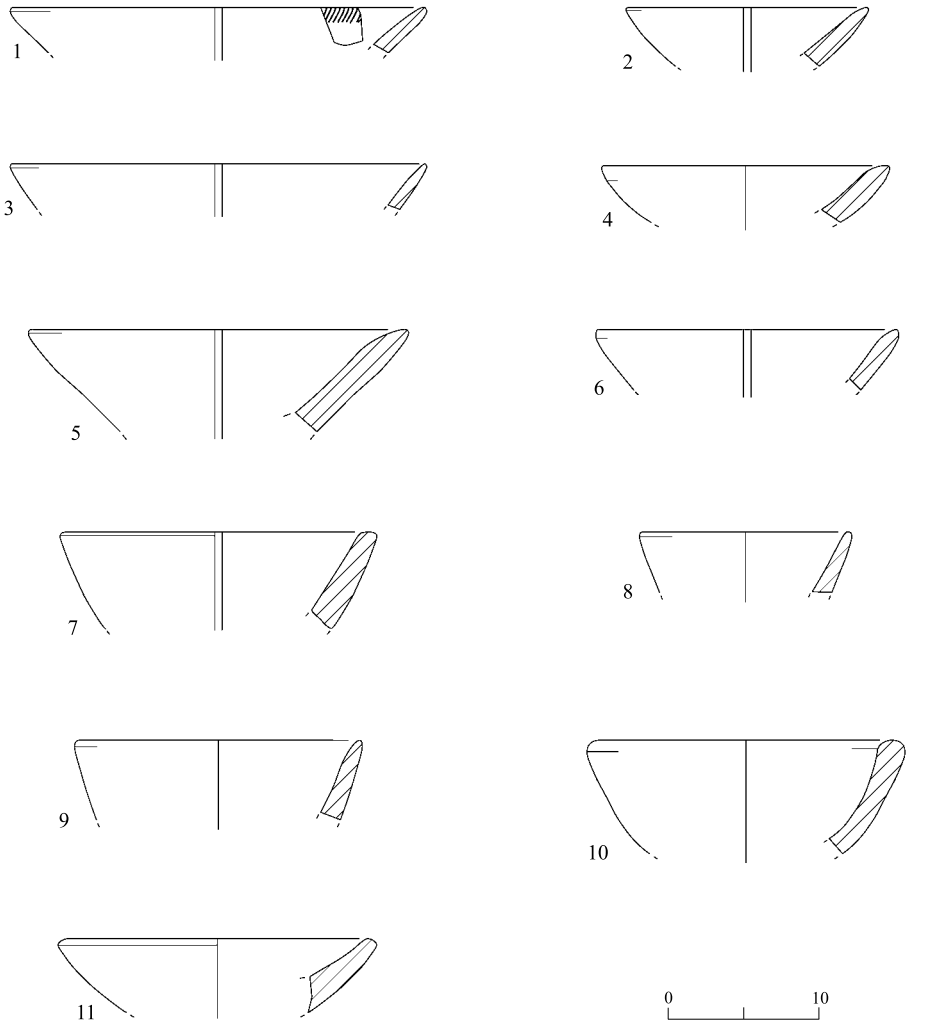

Fig. 6. Ground stone vessels.

No.	Area	Locus	Basket	Description
1	A	134	4121	R2a, basalt, with incised décor on int.
2	A	166	4306	R2a, basalt
3	A	179	4337	R2a, basalt
4	A	101	4030	R2a, basalt
5	A	130	4113	R2a, phosphorite
6	A	101	4001	R2a, basalt
7	A?	14		R1c, basalt
8	A	143	4211	R1a, basalt
9	A	111	4052	R4b, basalt
10	C	147	4221	R4b, basalt
11	C	224	4365	R4? basalt, signs of grinding on top of rim

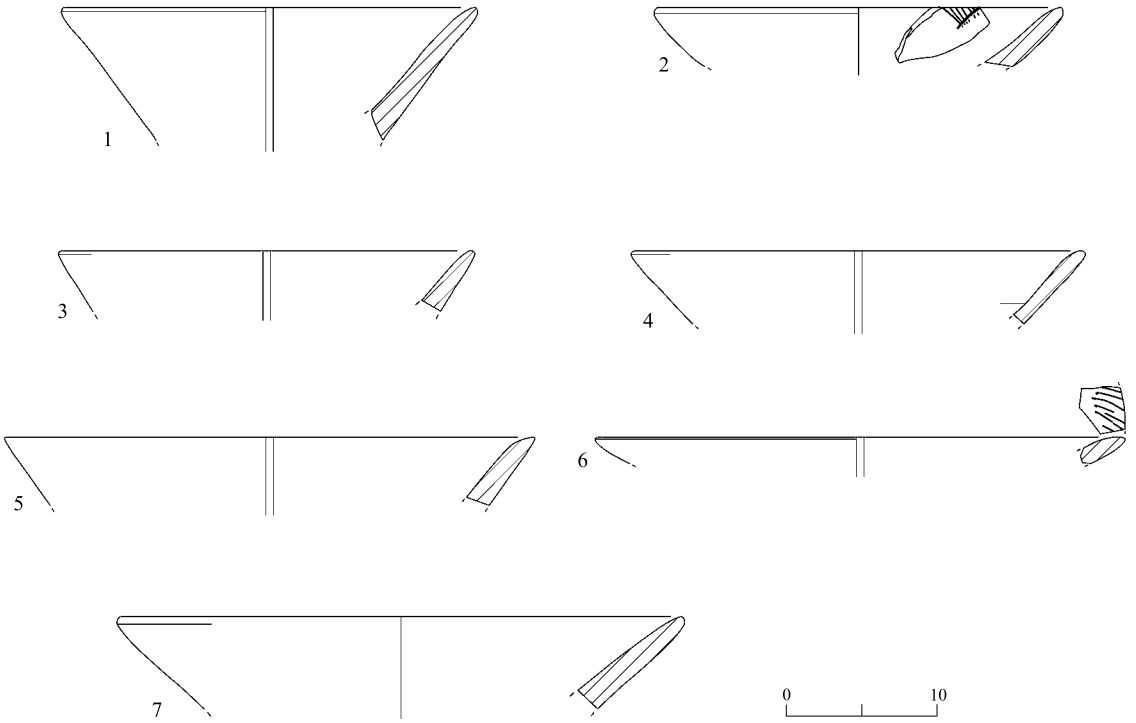

Fig. 7. Basalt vessels.

No.	Area	Locus	Basket	Description
1	A	166	4273	R2a
2	A	117	4054	R2a, with incised triangle on int.
3	B	226	4373	R2a
4	A	130	4108	R2a
5	A	134	4148	R2a, highly polished int. and ext.
6	A	110	4033	R2a, incised triangle on int.
7	C	212	4348	R2a

The majority of the basalt rim fragments represent typical open vessels with straight walls and tapering rims (Rim Type R2a; Rowan 1998:220, Fig. 47) known from the late Chalcolithic period, specifically the late fifth to the early fourth millennia BCE (Amiran and Porat 1984); none resemble forms known from the Early Bronze Age (Braun 1990; Rowan 1998). Although easily recognizable as Chalcolithic, these rims are not diagnostic of vessel form because they are typical of both fenestrated, pedestalled vessels and of open bowls, both of which exhibit such rim profiles, with widely varying rim diameters. A few rim-to-wall fragments exhibit slightly different profiles, some with a more convex wall profile (Fig. 6:10, 11); Fig. 6:11 shows evidence of grinding on the top of the rim. At least six of the rim fragments have incised décor on the rim interior (Figs. 6:1; 7:2, 6; 8:1, 5), a

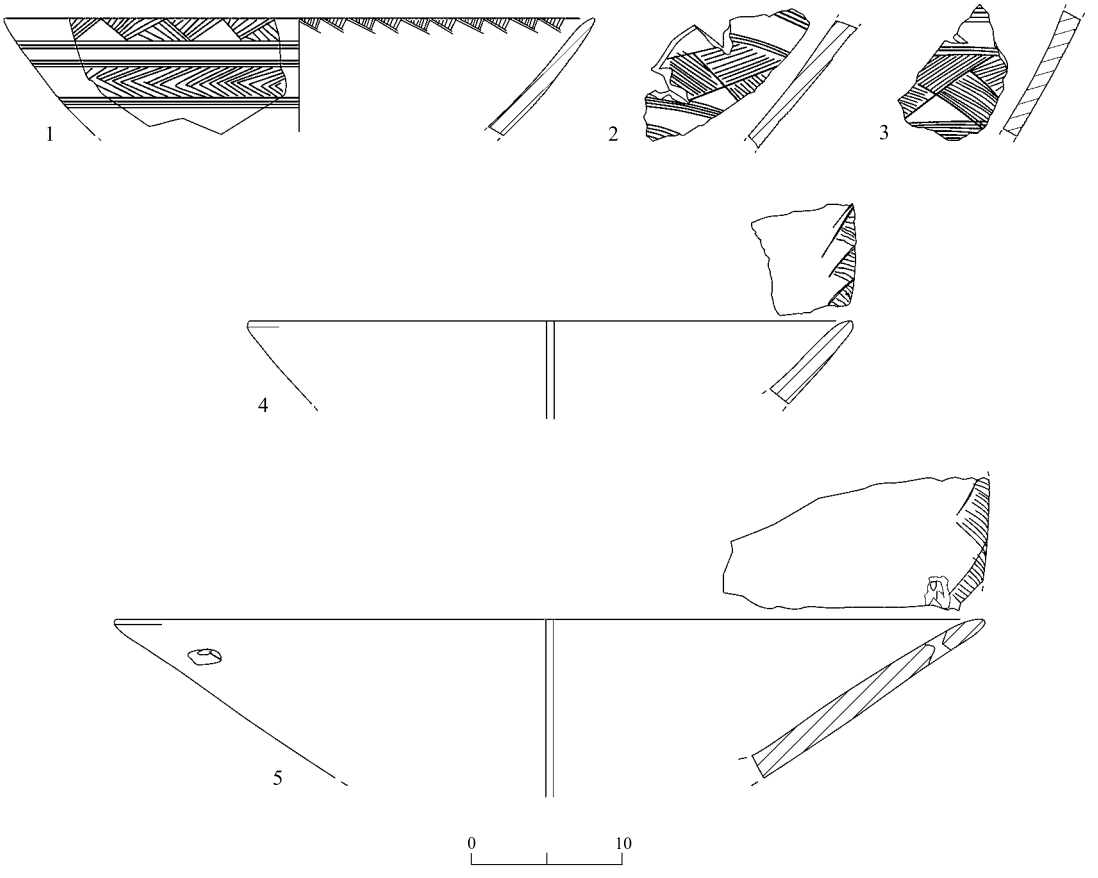

Fig. 8. Basalt vessels.

No.	Area	Locus	Basket	Description
1	A	133	4120	R2a, incised triangle on int., triangles and chevron on ext.
2	A	133	4120	Incised décor, filled diamonds; joins with Fig. 8:1
3	A	133	4120	Incised décor, filled triangles and diamonds; joins with Fig. 8:1
4	C	210	4378	R2a
5	A	107	4016	R2a, incised triangle on int.; mending hole; includes joined fragment from L115, B4050

hallmark motif common to Chalcolithic vessels. In addition to the triangle motif incised on the rim interior, Fig. 8:1 is more elaborately decorated, with a rim exterior incised with filled triangles, below which is an additional register comprising parallel horizontal lines borders an incised herringbone pattern. Other traces of incised decoration are visible on smaller wall fragments (Fig. 9:3, 6). Similar highly decorated basalt bowls, found at Abu Maṭar and Bir eṣ-Ṣafadi (Commenge, in press), Wadi Zeita (Rowan 1998: Fig. 53C) and Shiqmim (Levy and Alon 1985: Fig. 4.5), are relatively uncommon. Two additional wall fragments (Fig. 8:2, 3), probably from the same vessel, include diamonds and triangles filled with parallel

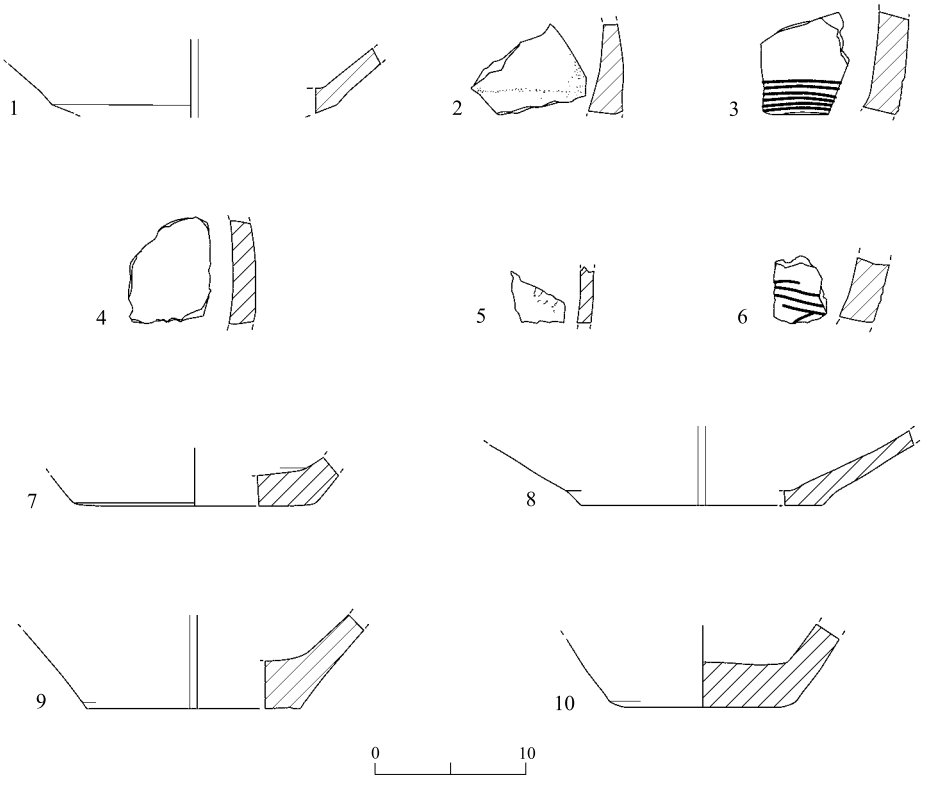

Fig. 9. Basalt vessels.

No.	Artifact	Area	Locus	Basket	Description
1	Medial	B	322	3045	
2	Wall	A	167	4278	
3	Wall	A	184	4331	Incised ext. parallel lines
4	Wall	A	110	4052	
5	Wall	B	321	3025	
6	Wall	?	?		Incised décor, ext. parallel lines?
7	Base	A	167	4269	Flat base, open form
8	Base	B	316	3002	Flat base, widely flaring open form
9	Base	A	157	4251	Flat base, open form
10	Base	A	157	4251	Flat base, open form

lines incised on the exterior—decorative styles also known from Abu Maṭar and Bir eṣ-Ṣafadi (Commenge, in press) and Shiqmim (Levy and Alon 1985: Fig. 4:5).

Twelve fragments of fenestrated, pedestalled basalt vessels were also recovered (Fig. 10; Table 3), including parts of legs/supports (n = 7; Fig. 10:2, 3, 5), base rings (n = 1; Fig. 10:8–11) and fragments from the medial section between the upper bowl and the legs/supports (n = 4; Fig. 10:1, 4, 6, 7). At least one example of a medial fragment has the broken section

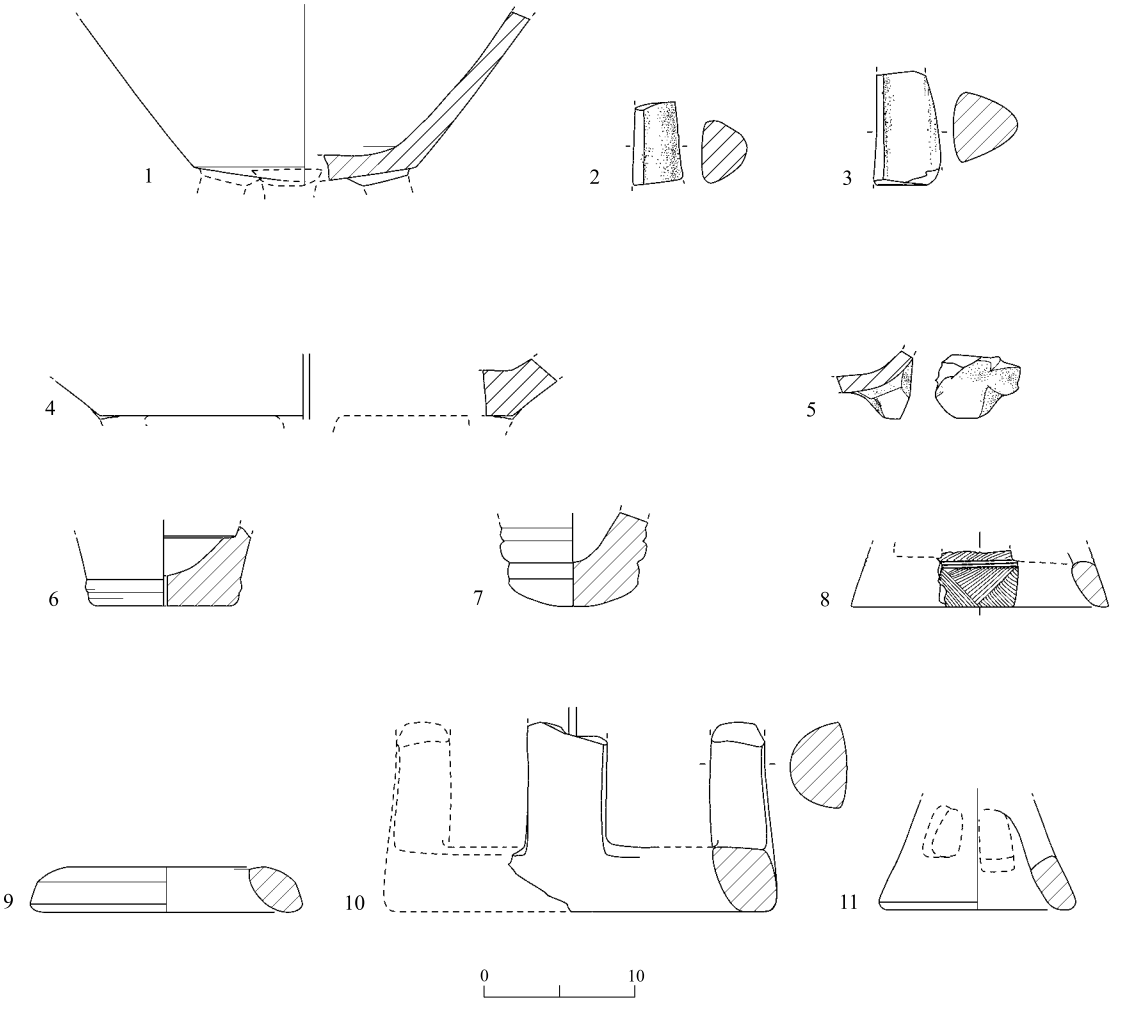

Fig. 10. Basalt fenestrated pedestalled vessels.

No.	Area	Locus	Basket	Description
1	A	184, 130	4258, 4123	Medial fragment, reground leg; 7 pieces total, all conjoined (2 from L184, B4258, 5 from L130, B4123)
2	A	122	4090	Leg fragment
3	A	184	4371	Leg fragment
4	A	117	4054	Medial fragment
5	A	101	4013	Medial fragment and leg
6	A	104	4014	Medial fragment(?), reworked
7	A	166	4290	Medial fragment with incised raised bands
8	A	117	4071	Base ring, with incised décor on ext.
9	A	179	4361	Base ring fragment
10	A	117	4070	Leg to base ring fragment
11	A	117	4067	Leg to base ring fragment

Table 3. Fenestrated Pedestalled Vessel Fragments

No.	Fragment Type	Locus	Basket	Length (mm)	Width (mm)	Thickness (mm)	Base Diameter (mm)	Description	Fig. No.
1	Leg	183	4376	129	60	36		Large, thick; elliptical cross-section	
2	Leg	184	4371	75	43	45		Large, thick; triangular cross-section	10:3
3	Leg	122	4090	57	42	29		Too small to be same as L117, B4070	10:2
4	Leg/ medial	101	4013	54	39	12		Leg stub; reground	10:5
5	Leg/ring base	117	4071	95			250	Finely ground, intricate exterior incised decoration	10:8
6	Leg/ring base	117	4070	121			240	Massive	10:10
7	Leg/ring base	117	4067	77			140	Wide leg; small ring base	10:11
8	Medial	117	4054	121	57	23 Base: 29		Thin, finely ground; Type 4cii	10:4
9	Medial	104	4014	49	48	16 Base: 19		Single band (9 mm in width)	10:6
10	Medial	130, 184	4123, 4258	162	90	17 Base: 20		7 pieces total; all conjoined	10:1
11	Medial	166	4290	71	61	17 Base: 27		4 raised bands (8–17 mm)	10:7
12	Ring base	179	4361	89	25	34	180		10:9

of the leg reground (Fig. 10:1). This reworking of a broken leg/support on fenestrated stands is typical of Chalcolithic basalt vessels. Presumably, this indicates an effort to extend the use of the vessel, or at least continue its display. Similar efforts at other sites, such as Gilat, Shiqmim and Shoham (North), support the impression that these were valued objects that were not simply discarded when damaged. Examples from Gilat are particularly re-levant because there are fenestrated basalt stands that were reground in similar fashion, including the *en relief* single band (Rowan et al. 2006: Figs. 12.32:8, 10; 13.33:7). Another very close example, excavated from Cave 4 at Shoham (North), also exhibits the same raised band and rounded exterior base (Rowan 2005: Fig. 9.10:2), as well as other examples of reground fenestrated stands, repurposed by grinding down the legs on the underside (Rowan 2005: Figs. 9.10:1, 3, 4).

Table 4 summarizes the stone vessel fragment types, including an estimate of the minimum number of vessels represented by these fragments. Each medial fragment represents a single

Table 4. Stone Vessel Fragments and Estimated Minimum Number of Vessels (MNV)

Area	A	B	C	None	Total
Fragment Element					
Rim	25		4		29
Wall	10	7		2	19
Base	3	1			4
Fenestrated Stands					
Medial	4				4
Leg	4				4
Base/leg	3				3
Base ring	1				1
Total	*50*	*8*	*4*	*2*	*64*
MNV					
Open form vessels	10	1	3		14
Fenestrated stands	4				4
Total MNV	*14*	*1*	*3*		*18*

vessel, such that a conservative estimate for the number of fenestrated, pedestalled vessels would be four. Estimating the number of open form vessels is more difficult. Four base fragments (Fig. 9:6, 7, 9, 10) each represent different vessels based on their size, profile and locus of discovery, but limiting the estimate to only these would ignore the numerous vessel rim fragments. With 25 basalt vessel rim fragments in Area A, a higher number of open vessels seems probable. Deducting four vessels represented by the fenestrated stand fragments and three vessels represented by the base fragments would suggest that these remaining vessel fragments represent approximately ten vessels as an estimate for Area A. In addition to that estimate, three additional vessels recovered from Area C are estimated, based on the four vessel rim fragments found in that area.

DISCUSSION

The ground stone assembledge from Ḥorbat Nevallaṭ represents an atypical group, presumably reflecting to some degree the different primary functions of the areas excavated at the site. The majority of the artifacts derive from two separate areas, A and C, each with a distinct repertoire of ground stone artifacts. The majority (60%) were found in Area A, and 70% of these were basalt vessel fragments. Only a quarter (28%) of the total site assemblage was found in Area C, with handstones and hammerstones/pounders being the most common tool types. Only eight artifact fragments were found in Area B, all stone vessel fragments.

This distribution reflects the apparently distinct activities carried out in the different site areas. Although three grinding slabs were found in each of Areas A and B, the majority

of functional ground stone artifacts—primarily handstones and hammerstones/pounders—were found in Area C (Table 1). Despite the small numbers of artifacts recovered here, the fact that this greatest concentration of basic ground stone tools came from a part of the site where bedrock features were documented supports the impression that this was a working area.

Of the handstones, only three are complete and therefore descriptive statistics would not be meaningful. However, these handstones show great dimensional similarity, measuring 190 to 205 mm in length and 150 to 168 mm in width—a variation of only 15 and 18 mm respectively. Comparing these dimensions with those of the rectangular bedrock features in Area C suggests a possible association. The three complete handstones—all from Area C—have an average length of around 200 mm, which would fit within the width measurements of almost all of the rectangular bedrock features in Area C (means: length 450 mm; width 250 mm; depth 150 mm), as shown in Table 5. Although this sample is too limited to confirm a direct correlation, the average length of the handstones would fit comfortably within the bedrock features, suggesting that handstones reduced substances in these rectangular bedrock concavities. Similar bedrock features have been documented at other sites (e.g., Modi‘in—van den Brink 2007) and represent areas for the production of agricultural products. The presence of many olive stones at Ḥorbat Nevallaṭ (van den Brink et al. 2001; see Liphschitz, this volume) suggests that these features may have been used for olive oil production. Additional residue analysis should be carried out on both the vessels and bedrock cut features in order to clarify this point, which would contribute significantly to our understanding of the importance of olive processing during late prehistory.

The high concentration of basalt vessels at the site, specifically in Area A, is unusual. Conservatively, the 64 stone vessel fragments found at the site represent approximately 18 vessels—a large collection for such a limited excavation area, and particularly, 14 vessels

Table 5. Area C, Mean Dimensions of Shallow Oblong Bedrock Features (in mm)

No.	Length	Width	Depth
1	61	30	21
2	50	56	31
3	50	30	31
4	50	20	13
5	50	30	16
6	50	30	28
7	30	12	4
8	50	21	11
9	55	35	13
10			
11	40	35	30
Means	*48.6*	*29.9*	*19.8*

from a single Chalcolithic broadroom building. By contrast, four seasons of excavation at Shiqmim (1987–1989, 1993)—a large Chalcolithic site with multiple building phases—yielded an MNV estimate (n = 22) only slightly greater than that of Ḥorbat Nevallaṭ (Rowan 1998: Table 14). Moreover, the ground stone vessels found at Ḥorbat Nevallaṭ are generally well-made of dense basalt, used to carefully manufacture fenestrated stands, fine bowls, and a few examples of exterior decoration. Such an assemblage does not seem typical of smaller domestic habitation sites (although quantitative data from other sites is only recently becoming available).

At the same time, the proportion of open form vessels to fenestrated, pedestalled stands is similar to that of settlement sites. Most sites recover higher quantities of open form, flat-based basalt vessels, but there are exceptions, particularly at sites such as Peqiʿin (van den Brink 2013), Shoham (North) (Rowan 2005), Naḥal Qana (Gopher and Tsuk 1996), Givʿat Ha-Oranim (Scheftelowitz and Oren 2004) and Gilat (Rowan et al. 2006). The first three are burial cave sites, while the other two have substantial mortuary components (Rowan and Ilan 2007; Rowan 2014a).

The quality and quantity of the Ḥorbat Nevallaṭ assemblage suggests that the site's inhabitants participated in networks distributing prestige objects, such as the basalt bowls. Alternatively, stone workers may have periodically traveled some distance to basalt sources in order to manufacture the bowls independently. We lack evidence for the production of basalt vessels during later prehistory, despite their notable presence even at sites some distance from potential basalt flows. Unfortunately, there are various potential sources for the basalt, including the Golan, northern Jordan, and central Jordan, but provenience studies have not narrowed these possibilities sufficiently to hypothesize sources (Philip and Williams-Thorpe 1993; Rowan 1998; Rutter et al. 2003). If we accept the first scenario, that vessels arrived via exchange with external manufacturers, we must wonder what the inhabitants of Ḥorbat Nevallaṭ offered in exchange for such prestige items. One clue may be hypothesized based on the evidence for local, intensified horticultural production. If the bedrock features reflect this intensified production of some valuable resource such as olive oil, this would have provided a valuable exchange good (van den Brink et al. 2001; Lovell 2008). Although speculative, the increasing evidence for olive oil production during the Chalcolithic and the probability that this was an important product transported to the ritual site of Gilat (Alon and Levy 1989; Burton and Levy 2006; Commenge 2006) may explain one aspect of activities pursued at Nevallaṭ.

Until recently, the relative neglect of ground stone studies created difficulties for interpreting broader trends. As this slowly changes, there seems room for optimism in the potential for fresh insights to the lives of ancient people. Even a relatively small assemblage such as that recovered from Ḥorbat Nevellaṭ provides comparative data to other sites, regions, and periods. Despite the slow change in basic grinding implements that renders many types poor chronological indicators, their importance in the overall material culture should not be underestimated. Many types are often not only the mundane tools of a subsistence economy, but may also have prestige and symbolic importance, reflect gendered activities, or play

important roles in production and distribution (Rowan and Ebeling 2008). As we build upon these descriptions and analyses, we must confront the problems inherent in our non-standardized terminology, inconsistent collection and curation methods, and problems of storage for future generations.

ACKNOWLEDGEMENTS

Research for this study was possible due to generous grants from the National Endowment for the Humanities and the United States Information Agency while the author was a Fellow at the W.F. Albright Institute of Archaeological Research, Jerusalem. The author would like to thank Edwin van den Brink and Dorit Lazar for the opportunity to study this assemblage.

REFERENCES

Adams J.L. 2002. *Ground Stone Analysis: A Technological Approach*. Salt Lake City.

Alon D. and Levy T.E. 1989. The Archaeology of Cult and the Chalcolithic Sanctuary at Gilat. *JMA* 2:163–221.

Amiran R. and Porat N. 1984. The Basalt Vessels of the Chalcolithic Period and Early Bronze Age I. *Tel Aviv* 11:11–19.

Braun E. 1990. Basalt Bowls of the EB I Horizon in the Southern Levant. *Paléorient* 16/1:87–96.

Brink E.C.M. van den. 2007. Modi'in—Ḥorbat Ḥadat and Be'erit (A). *HA–ESI* 119 (February 12). http://www.hadashot-esi.org.il/report_detail_eng.aspx?id=484&mag_id=112 (accessed November 8, 2015).

Brink E.C.M. van den. 2013. Basalt Ground Stone Assemblage. In D. Shalem, Z. Gal and H. Smithline. *Peqi'in: A Late Chalcolithic Burial Site, Upper Galilee, Israel* (Land of Galilee 2). Ẓemaḥ. Pp. 319–328.

Brink E.C.M. van den and Lazar D. This volume. Ḥorbat Nevallaṭ: A Chalcolithic Habitation Site with Agricultural Installations in the Shephelah Foothills.

Brink E.C.M. van den, Liphschitz N., Lazar D. and Bonani G. 2001. Chalcolithic Dwelling Remains, Cup Marks and Olive (*Olea europea*) Stones at Nevallaṭ. *IEJ* 51:36–42.

Burton M. and Levy T.E. 2006. Organic Residue Analysis of Selected Vessels from Gilat—Gilat Torpedo Jars. In T.E. Levy ed. *Archaeology, Anthropology and Cult: The Sanctuary at Gilat, Israel*. London–Oakville. Pp. 849–862.

Commenge C. In press. *Le mobilier en pierre des sites de Beersheva, Neguev septentrional, Israël* (Cahiers du CRFJ 9). Paris.

Commenge C. 2006. Gilat's Ceramics: Cognitive Dimensions of Pottery Production. In T.E. Levy ed. *Archaeology, Anthropology and Cult: The Sanctuary at Gilat, Israel.* London–Oakville. Pp. 394–506.

Dothan M. 1959. Excavations at Ḥorvat Beter (Beersheba). *'Atiqot* (*ES*) 2:1–42.

Epstein C. 1998. *The Chalcolithic Culture of the Golan* (IAA Reports 4). Jerusalem.

Gilead I. 1995. *Grar: A Chalcolithic Site in the Northern Negev* (Beer-Sheva VII*)*. Be'er Sheva'.

Gilead I. and Goren Y. 1989. Petrographic Analyses of Fourth Millennium B.C. Pottery and Stone Vessels from the Northern Negev, Israel. *BASOR* 275:5–14.

Gopher A. and Eisenberg E. 2001. Groundstone Artifacts and Small Finds. In E. Eisenberg, A. Gopher and R. Greenberg. *Tel Te'o: A Neolithic, Chalcolithic and Early Bronze Age Site in the Ḥula Valley* (IAA Reports 13). Jerusalem. Pp. 139–150.

Gopher A. and Orrelle E. 1995. *The Ground Stone Assemblages of Munhata: A Neolithic Site in the Jordan Valley, Israel; A Report* (Cahiers des missions archéologiques françaises en Israël 7). Paris.

Gopher A. and Tsuk T. 1996. The Chalcolithic Assemblages. In A. Gopher and T. Tsuk eds. *The Naḥal Qanah Cave: Earliest Gold in the Southern Levant* (Tel Aviv University Institute of Archaeology Monograph Series 12). Tel Aviv. Pp. 91–138.

Goren Y. 1991. Phosphorite Vessels of the 4th Mill. B.C. in the Southern Levant: New Data, New Interpretations. *JIPS* 24:102–111.

Hamon C. 2008. From Neolithic to Chalcolithic in the Southern Caucasus: Economy and Macrolithic Implements from Shulaveri-Shomu Sites of Kwemo-Kartli (Georgia). *Paléorient* 34/2:85–135.

Khalaily H. and Marder O. 2003. The Groundstone Assemblage. In H. Khalaily and O. Marder. *The Neolithic Site of Abu Ghosh: The 1995 Excavations* (IAA Reports 19). Jerusalem. Pp. 59–68.

Koeppel R. 1940. *Teleilāt Ghassūl* II: *Compte-rendu des fouilles de l'Institut Biblique Pontifical 1932–1936* (Scripta Pontificii Instituti Biblici 87). Rome.

Lee J.R. 1973. *Chalcolithic Ghassul: New Aspects and Master Typology.* Ph.D. diss. The Hebrew University. Jerusalem.

Levy T.E. and Alon D. 1985. Shiqmim: A Chalcolithic Village and Mortuary Centre in the Northern Negev. *Paléorient* 11/1:71–83.

Levy T.E. and Holl A. 1987. Theory and Practice in Household Archaeology: A Case Study from the Chalcolithic Village at Shiqmim. In T.E. Levy ed. *Shiqmim* I: *Studies concerning Chalcolithic Societies in the Northern Negev Desert, Israel (1982–1984)* (BAR Int. S. 356). Oxford. Pp. 373–410.

Liphschitz N. This volume. The Archaeobotanical Remains from Ḥorbat Nevallaṭ.

Lovell J.L. 2008. Horticulture, Status and Long-Range Trade in Chalcolithic Southern Levant: Early Connections with Egypt. In B. Midant-Reynes and Y. Tristant eds. *Egypt at Its Origins* 2 *(Proceedings of the International Conference "Origin of the State. Predynastic and Early Dynastic Egypt," Toulouse (France), 5th–8th September 2005)* (Orientalia Lovaniensia Analecta 172). Leuven–Paris–Dudley, Mass. Pp. 741–762.

Mallon A., Koeppel R. and Neuville R. 1934. *Teleilāt Ghassūl* I: *Compte rendu des fouilles de l'Institut Biblique Pontifical 1929–1932*. Rome.

Milevski I. 1998. The Groundstone Tools. In G. Edelstein, I. Milevski and S. Aurant. *Villages, Terraces and Stone Mounds: Excavations at Manaḥat, Jerusalem, 1987–1989* (IAA Reports 3). Jerusalem. Pp. 61–77.

Perrot J. 1955. The Excavations at Tell Abu Matar, near Beersheba. *IEJ* 5:17–41, 73–84, 167–189.

Perrot J., Zori N. and Reich Y. 1967. Neve Ur, un nouvel aspect du Ghassoulien. *IEJ* 17:201–232.

Philip G. and Williams-Thorpe O. 1993. A Provenance Study of Jordanian Basalt Vessels of the Chalcolithic and Early Bronze Age I Periods. *Paléorient* 19/2:51–63.

Rosen S.A. 1997. *Lithics after the Stone Age: A Handbook of Stone Tools from the Levant*. Walnut Creek–London–New Dehli.

Rowan Y.M. 1998. *Ancient Distribution and Deposition of Prestige Objects: Basalt Vessels during Late Prehistory in the Southern Levant* (2 vols.). Ph.D. diss. University of Texas. Austin.

Rowan Y.M. 2003. The Groundstone Assemblage. In A. Golani. *Salvage Excavations at the Early Bronze Age Site of Qiryat Ata* (IAA Reports 18). Jerusalem. Pp. 183–202.

Rowan Y.M. 2005. The Groundstone Assemblages. In E.C.M. van den Brink and R. Gophna. *Shoham (North): Late Chalcolithic Burial Caves in the Lod Valley, Israel* (IAA Reports 27). Jerusalem. Pp. 113–139.

Rowan Y.M. 2006. The Groundstone Assemblages. In E. Yannai. *'En Esur ('Ein Asawir)* I: *Excavations at a Protohistoric Site in the Coastal Plain of Israel* (IAA Reports 31). Jerusalem. Pp. 211–250.

Rowan Y.M. 2014a. The Mortuary Process in the Chalcolithic Period. In M. Sebbane, O. Misch-Brandl and D.M. Master eds. *Masters of Fire: Copper Age Art from Israel*. New York–Princeton. Pp. 100–113.

Rowan Y.M. 2014b. The Stone Artifact Assemblage from Tell Jemmeh. In D. Ben-Shlomo and G. van Beek eds. *The Smithsonian Excavations at Tell Jemmeh, Israel 1970–1990*. Washington, D.C. Pp. 917–969.

Rowan Y.M. and Ebeling J.R. 2008. Introduction: The Potential of Ground Stone Studies. In Y.M. Rowan and J.R. Ebeling eds. *New Approaches to Old Stones: Recent Studies of Ground Stone Artifacts*. London–Oakville. Pp. 1–15.

Rowan Y.M. and Ilan D. 2007. The Meaning of Ritual Diversity in the Chalcolithic of the Southern Levant. In D.A. Barrowclough and C. Malone eds. *Cult in Context: Reconsidering Ritual in Archaeology.* Oxford. Pp. 249–256.

Rowan Y.M., Levy T.E., Alon D. and Goren Y. 2006. Gilat's Ground Stone Assemblage: Stone Fenestrated Stands, Bowls, Palettes, and Related Artifacts. In T.E. Levy ed. *Archaeology, Anthropology and Cult: The Sanctuary at Gilat, Israel.* London–Oakville. Pp. 575–684.

Rutter G., Pearson D.G., Philip G., Day J.M.D. and Ottley C.J. 2003. The Use of ICP-MS in Provenancing Igneous Stone Artefacts: Examples from the Southern Levant. In G. Holland and S.D. Tanner eds. *Plasma Source Mass Spectrometry: Applications and Emerging Technologies.* Pp. 209–219.

Scheftelowitz N. and Oren R. 2004. *Giv'at ha-Oranim: A Chalcolithic Site* (*Salvage Excavation Reports* 1). Tel Aviv.

Wright K. 1992a. A Classification System for Ground Stone Tools from the Prehistoric Levant. *Paléorient* 18/2:53–81.

Wright K. 1992b. *Ground Stone Assemblage Variations and Subsistence Strategies in the Levant, 22,000 to 5,500 B.P.* Ph.D. diss. Yale University. New Haven.