*'Atiqot* 101, 2020

# Ḥorbat 'Illin Taḥtit: A Late Early Bronze Age IA–B Settlement in the Bet Shemesh Region

Ron Be'eri, Yitzhak Paz, Nuha Agha,
Anat Cohen-Weinberger and Ariel Vered

## Introduction

Ḥorbat 'Illin Taḥtit (Lower) is located on the eastern flank of the Judean Shephelah, within the municipal area of the city of Bet Shemesh (Fig. 1; map ref. 199538–611/627850–913).[1]

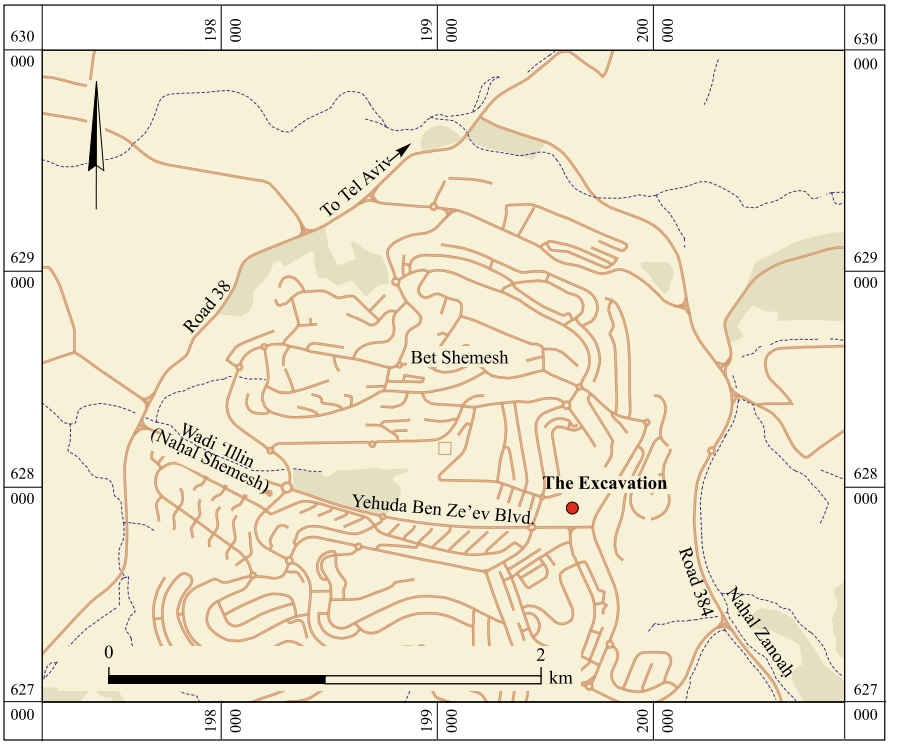


Fig. 1. Location map.

[1] The excavation (Permit No. A-6416), on behalf of the Israel Antiquities Authority, was directed by Ron Be'eri and Yoav Arbel, with the help of Nissan Nehama and Raid Abu Khalaf (administration), Eliot Braun (scientific advisor), Benyamin Storchan, Natalia German, Sivan Mizrahi and Zohar Turgeman-Yaffe (trial

An extensive salvage excavation conducted at the site in the early 1990s revealed a large settlement of the Early Bronze Age I (late fourth millennium BC) that was abandoned by the end of that period. A smaller-scale salvage excavation in 2012 revealed another part of this settlement, yielding further evidence of its occupation during both the early and late phases of EB I. This excavation is described in the present paper in light of recent insights from excavations in the vicinity of Bet Shemesh, at sites such as Eshta'ol, Hartuv and Ramat Bet Shemesh, and includes discussions regarding the chronology, geographic distribution and cultural practices in the region during EB I.

*The Site and History of Research*

The site of Ḥ. 'Illin Taḥtit is located west of Naḥal Zanoaḥ (Wadi en-Najil), a south–north oriented wadi connected to a tributary of Naḥal Soreq. The ancient settlement was built on a saddle, on the western slope of a limestone spur, from which the terrain descends moderately in an east–west direction toward the Naḥal Soreq basin and Tel Bet Shemesh (Fig. 2). The Survey of Western Palestine reported the presence of ruins at this location named "Kh. Wady 'Alin" (Conder and Kitchener 1883:128). In the survey map, two small tributaries of the east–west flowing Wadi 'Illin are shown to flank the limestone spur to the north and south; their juncture appears to delineate the western boundary of the ruins, while Naḥal Zanoaḥ marks their eastern boundary.

Extensive surveys and excavations uncovered the remains of a number of ancient settlements located in different topographic positions at the site. The site of Ḥ. 'Illin Taḥtit yielded the remains of a settlement dating from the Neolithic and Early Bronze Age I periods (Braun 1994; Fig. 3). On the adjacent, southern side of the Wadi 'Illin tributary, a Chalcolithic-period settlement was exposed (Ḥorbat 'Illin [South]; Stark 1994), and on the summit of the spur rising above and north of Ḥ. 'Illin Taḥtit, a settlement of the Byzantine, Abbasid and Mamluk periods was exposed (Ḥorvat 'Illin [Upper]; Seligman and May 1994).

The Ramat Bet Shemesh survey further reports pottery sherds from EB I–II, Iron II and the Persian, Hellenistic, Roman, Byzantine, Early Islamic, Mamluk and Ottoman periods at Ḥ. 'Illin Taḥtit (Dagan 2010:17–18, Sites 11.1, 11.2, 33.1). Those remains also include burial caves and rock-cut installations northeast of the site (Weksler-Bdolah 1998; Dagan 2010:17, Site 11.1), and the remnants of a paved road to its south, above the northern bank of Wadi 'Illin (Dagan 2010:19, Site 12). Pottery of the Chalcolithic and EB II–III periods was also collected during the survey at Ḥorbat 'Illin (South), in addition to sherds of the Late Roman, Early Islamic, Mamluk and Ottoman periods (Dagan 2010:25–26, Sites 33.1, 33.2, 34.1, 34.2, 35, 37). Abundant remains of burial caves and agricultural terraces

trenches). Also of assistance were Avraham Hajian, Rivka Mishayev and Mendel Kahan (field survey), Dov Porotsky (drafting), Elena Ilana Delerzon (location map), Assaf Peretz and Ron Be'eri (photography), Said Hassan 'Amlah (metal detecting), Hila Shoor-Rosenstein (metal cleaning), Yitzhak Paz (pottery reading), Irena Lidsky-Reznikov (pottery drawing) and Leonid Zeiger (flint drawing).

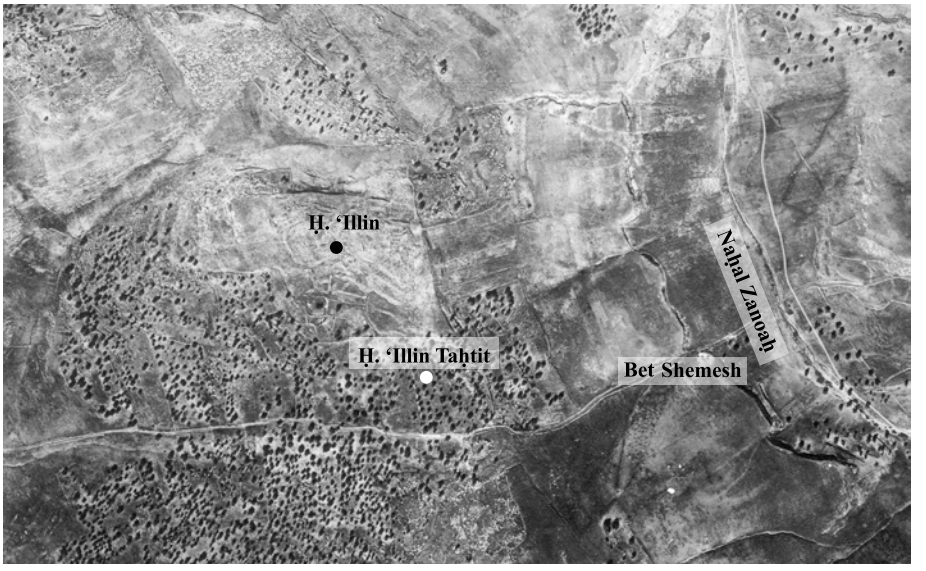


a

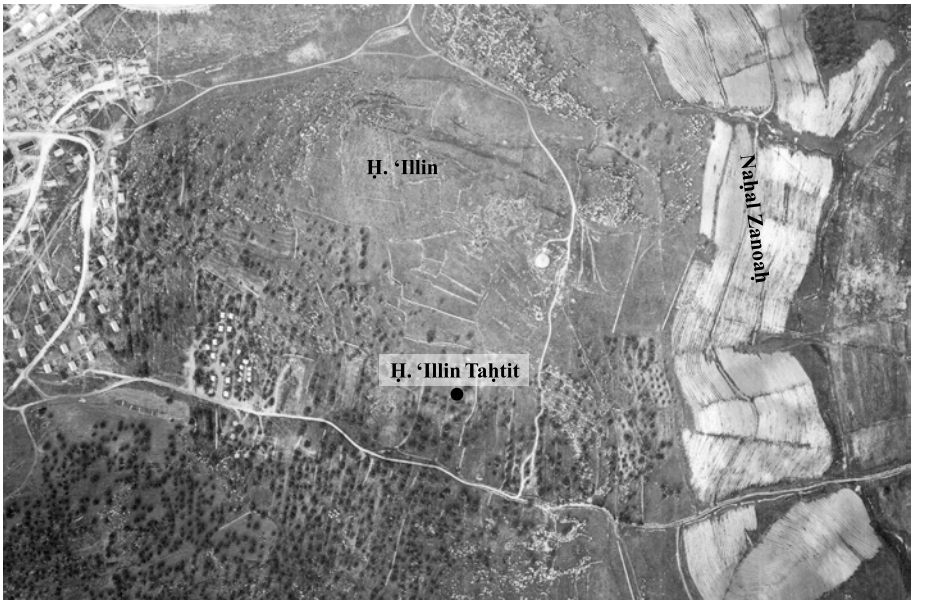


b

Fig. 2. Aerial photographs of Ḥ. ʻIllin Taḥtit: (a) from 27.20.1949 (p16-7093); (b) from 9.1.1958 (mm29-1888) (courtesy of the Survey of Israel: Government Agency for Geodesy, Cadastre, Mapping and Geographic information).

and installations, as well as some evidence of quarrying activity, dating mainly from the Hellenistic, Roman, Byzantine and Early Islamic periods, were also documented within the broad area of Ḥorbat ʻIllin (Braun 1994; 2008; Seligman and May 1994; Stark 1994; Weksler-Bdolah 1998; Avner 2000; Greenhut 2004; Zilberbod 2007; Dagan 2010).

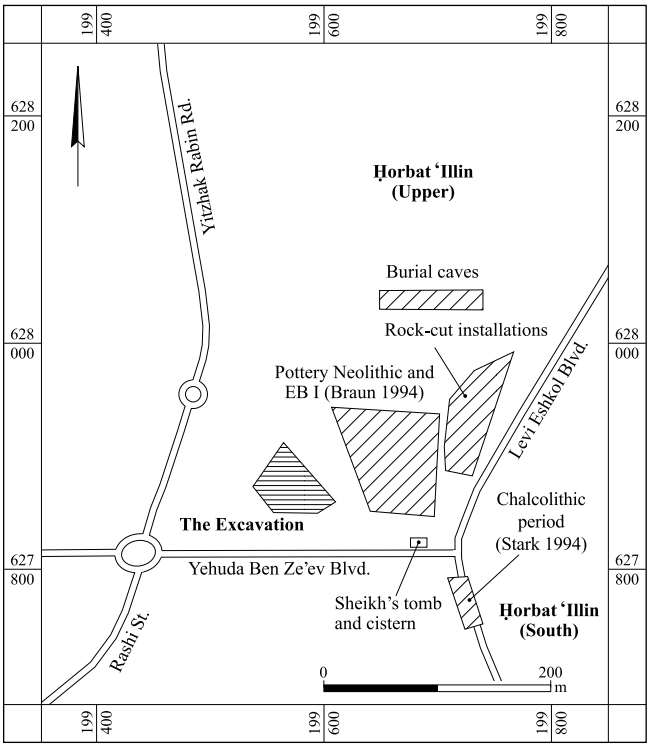


Fig. 3. Location map of the excavations at the site.

The excavation by Braun (1994; 2008) at Ḥ. 'Illin Taḥtit exposed five strata dating from the end of the Neolithic–beginning of the Chalcolithic (Stratum V), late EB I (Strata IV–III) and Hellenistic and later periods (Strata II–I); the latter mainly comprised remains of terraces. The late EB I (EB IB) strata, encompassing close to 20 architectural units ("rooms"), represent an extensive settlement, described by the excavator as a well-organized, unfortified village divided by alleyways or streets (Braun 2008).

A trial excavation by Mizrahi (2012), situated c. 30 m west of Braun's excavation, uncovered the remains of an EB I structure (see below; Plan 1: W218), which warranted the expansion of the excavation as described below.

## The Excavation

The 2012 salvage excavation, located in an area designated for construction by the municipal authority of Bet Shemesh, aimed at exposing a complete residential unit of the EB I settlement (Area B; Plan 1). It was preceded by an examination of sections in trial trenches, where wall segments and pottery sherds were uncovered. The excavation areas were opened near Wadi 'Illin, where soil and modern construction waste had accumulated

above the archaeological deposits. It was initially speculated that the archaeological remains in this area were better preserved; however, this was not the case. The remains turned out to be very badly preserved due to their proximity to bedrock and their exposure to erosion and weathering in antiquity, as well as additional damage due to post-Early Bronze Age human activities. No complete vessels were found within the excavated structures. This is in contrast with the findings in Braun's excavation at the site, where a 2–3 m thick accumulation was exposed, yielding much better-preserved remains. Also, our excavation uncovered only a single stratum of Late EB I (Stratum 2) as opposed to Braun's two layers (Strata IV–III) from this period.

The excavation consisted of fifteen 5 × 5 m squares (375 sq m), separated by one-meter-thick balks. The letters F–H were used to mark the southwest–northeast gridlines, and the numbers 13–18, for the southeast–northwest ones. The numbering of the loci began from 100, that of the baskets from 1000, and that of the walls from 200. All the uncovered remains were fully documented, and soil from secure contexts was sieved, mostly with 0.5 × 0.5 cm mesh screens, and occasionally with 1 × 1 cm mesh screens.

## Stratum 2: Early Bronze Age IB

### *A Large Residential Structure*

The main feature revealed in the excavated area was a large residential structure (Structure 156; c. 9 × 14 m; Plan 1; Figs. 4–7) comprising three units: two adjoining rectangular rooms on the west and east, and a large rectangular courtyard on the northeast. Only a small part of this badly preserved structure was excavated.

Structure 156 was built on a rocky terrain that slopes moderately from north to south toward Wadi ʻIllin. The walls of the northern part of the structure (W211, W224), standing one to two courses high, were built of fieldstones laid directly on bedrock. On its southern side, the structure was enclosed by an elongated stretch of three wall segments (W218, W219 and W225), constructed on an earthen fill that was used to level the bedrock and create a surface for laying down the floors of the adjacent rooms.

The stone courses of the wall foundations were presumably overlain by sun-dried mud bricks. The floors in the different parts of the structure were made of either packed earth or stone slabs, in accordance with the finds in Braun's (2008) excavation.

*The Western Room* (L154; Plan 1: Section 1–1; Fig. 5).— This was a rectangular broad room (3.5 × 5.0 m), enclosed by four straight walls (W211, W212, W213 and W219), 0.5–0.7 m wide, all built of two rows of medium- to large-sized stones with a fill of stone rubble and earth in-between. The floor in the northern side of the room was the leveled *qirṭon* (chalk) bedrock, whereas the remainder of the room was covered by a floor of packed earth (L123) laid over an earthen leveling fill (L150). Outside Room 154, to its north and west, hewn bedrock surfaces were exposed, overlain by an earthen layer (L115) containing EB IB pottery.

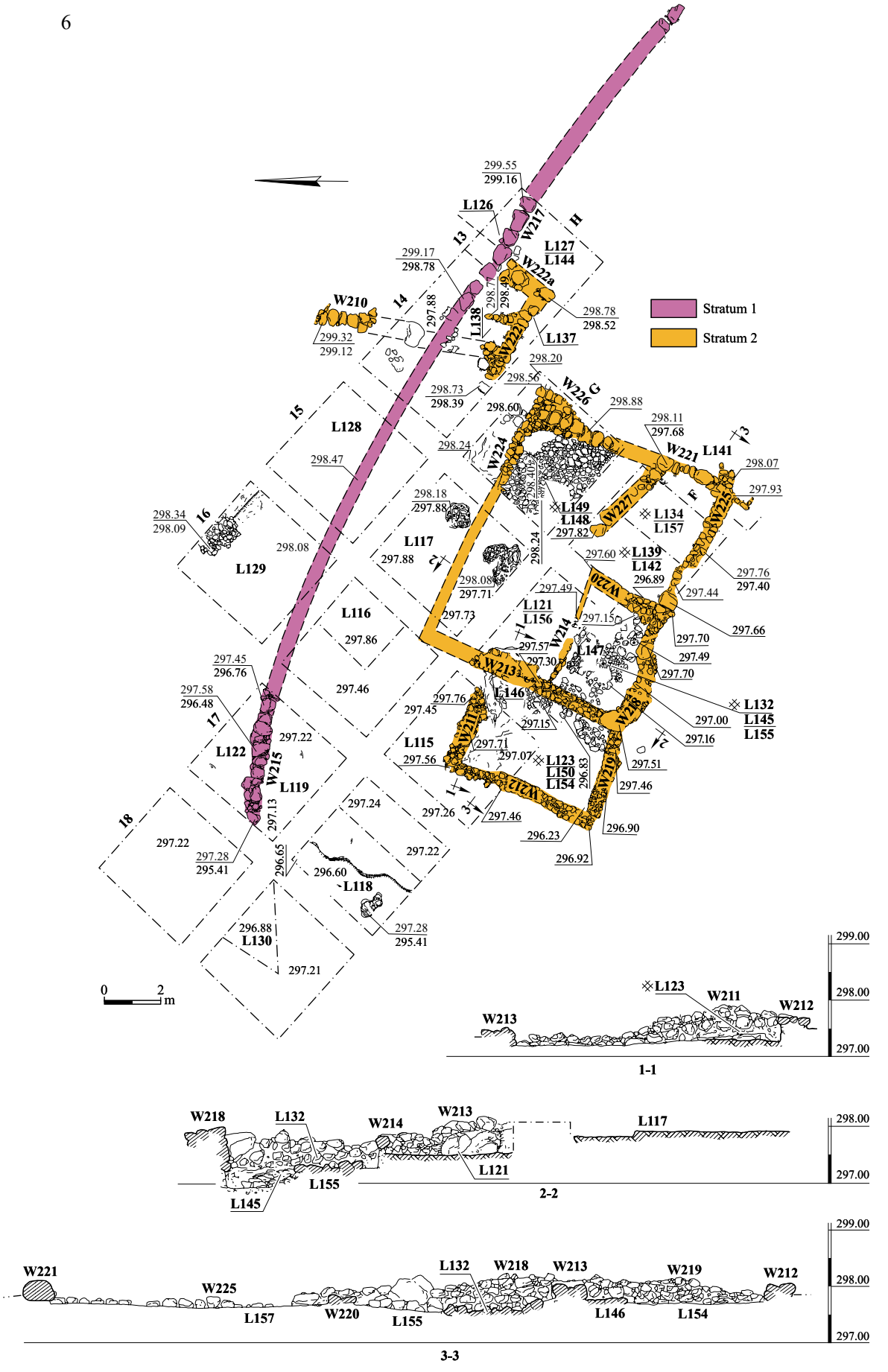


Plan 1. Strata 2–1, plan and sections.

*The Eastern Room* (L155; Plan 1: Section 2–2; Figs. 4–6).— This was a small rectangular room (2.7 × 4.0 m); its long walls (W214, W218) were perpendicular to Room 154. Northern W214, preserved to a height of two courses, was flimsily made of a single row of small fieldstones laid on top of a continuation of the earthen leveling fill, L150, underlying the southern part of Room 154. The southern wall, W218, preserved to a height of 4–5 courses, incorporated three larger stones, possibly for reinforcement. The floor of Room 155 (L132) was made of small fieldstones and laid over an earthen fill (L145).

In each of the two rooms (L154, L155), an oval installation (L146 and L147 respectively), built of flat stones and partly incorporated within the inner wall of the structure, atop the floor, was exposed. The installations may have been built as foundations for placing large containers. Numerous pottery sherds in addition to some flint sickle blades, grinding stones,

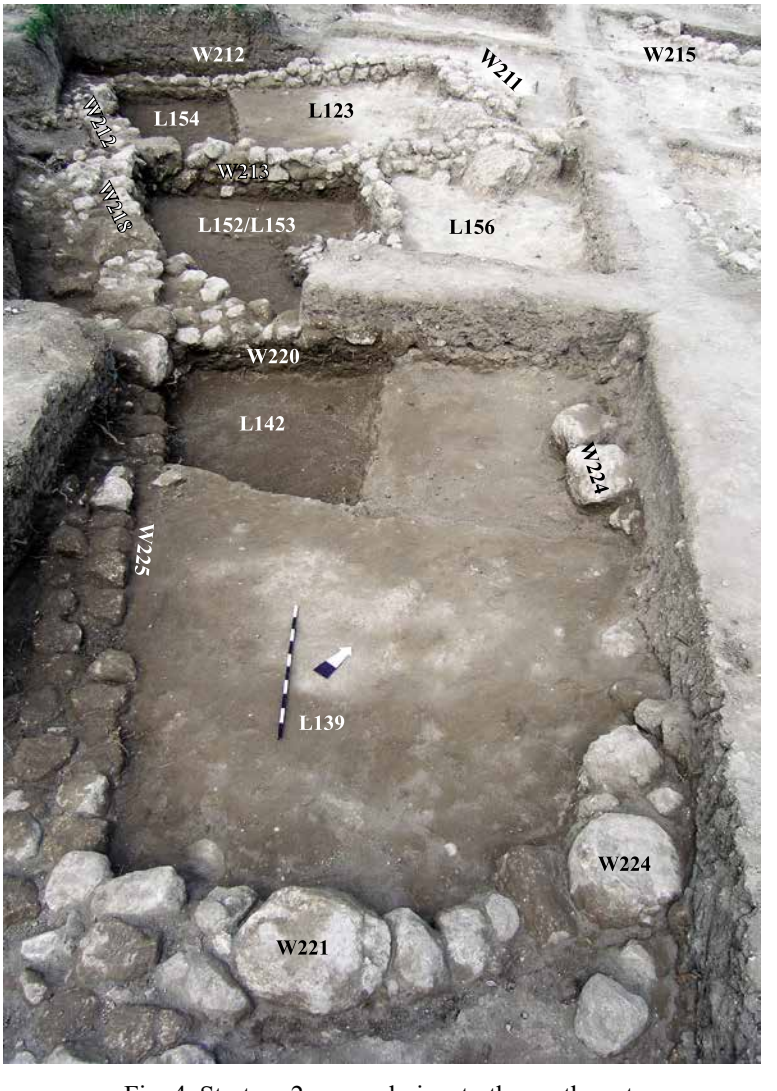


Fig. 4. Stratum 2, general view to the northwest.

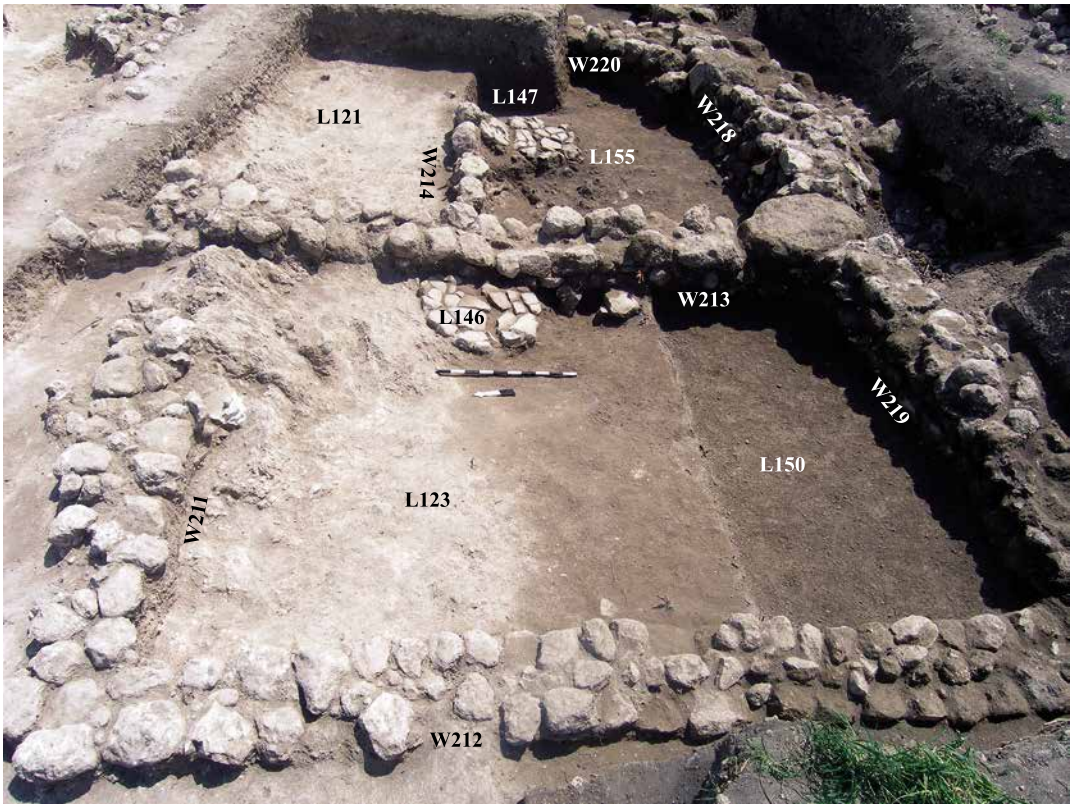


Fig. 5. Stratum 2, the western and eastern rooms, looking east.

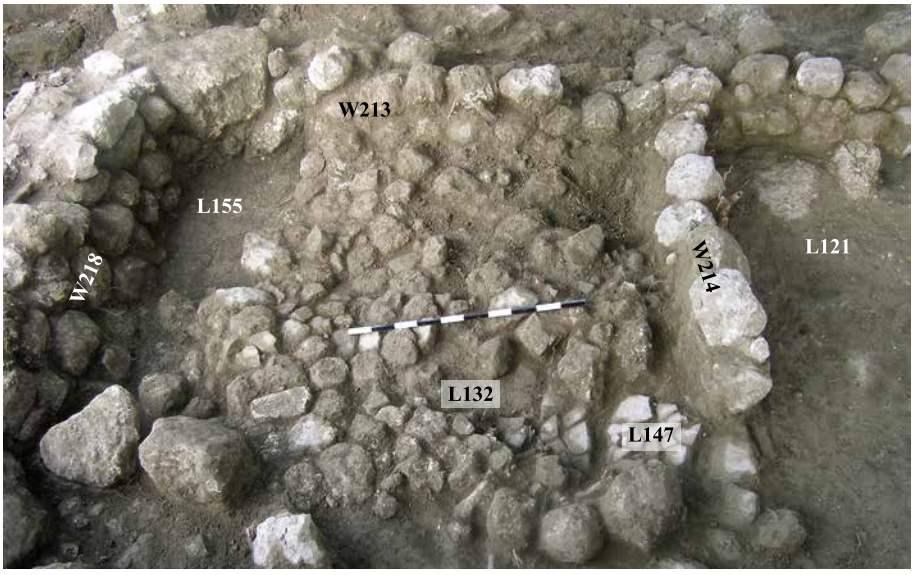


Fig. 6. Stratum 2, the eastern room, looking north.

round hammerstones, bitumen fragments and animal bones were retrieved from above the floors and their beddings.

*Courtyard* (L149, L156, L157; Plan 1: Section 3–3; Figs. 4, 7).— Northeast of Rooms 154 and 155, a large courtyard (c. 56 sq m) was partly excavated. On the west (L156), the courtyard was partly enclosed by W213 and W214 of Rooms 154 and 155, respectively. The floor of L156 was the leveled *qirṭon* bedrock, above which a dark brown earthen layer (L121), containing EB IB sherds, was exposed. In this part of the courtyard, its northern wall was not preserved.

In the eastern part of the courtyard (L157), its enclosing walls from the south (W225) and north (W224) were built of two rows of small stones, preserved to a height of one course. The eastern wall of the courtyard (W221) was built of larger stones, also preserved to a

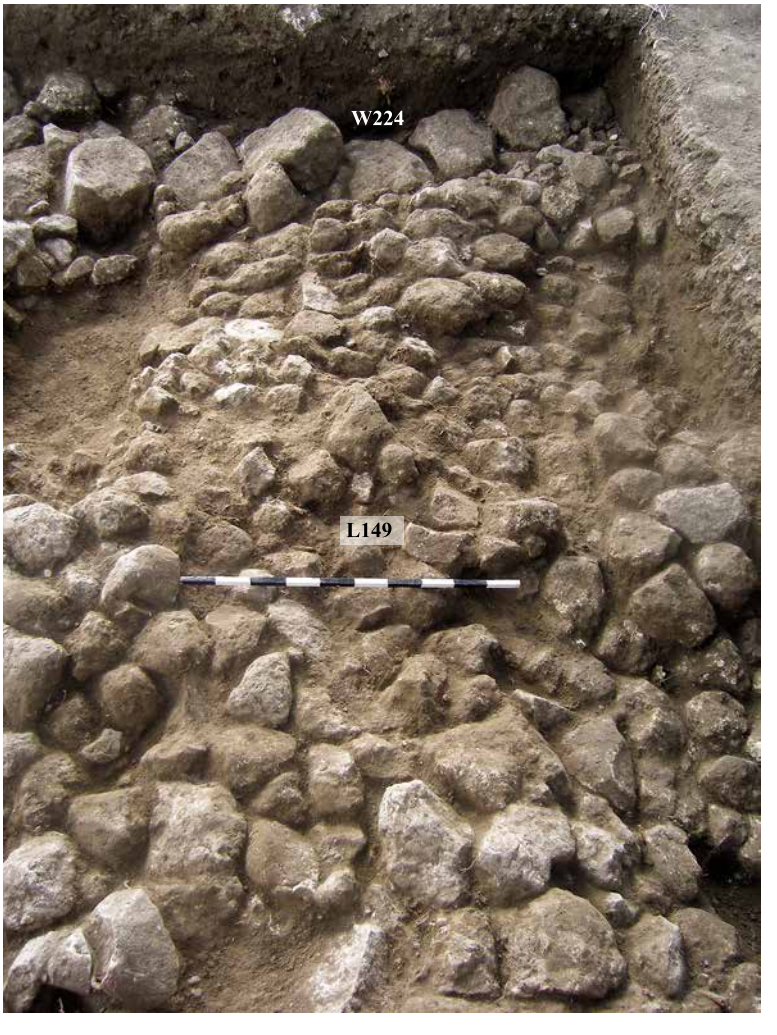


Fig. 7. Stratum 2, the northeastern corner of the courtyard (L149).

height of a single course. The corners of W221 with conjoining W224 and W225 seem to be rounded, which may indicate that this part of the courtyard was constructed in a different phase than the remainder of the structure. In the southeastern corner (L157), a packed earth floor (L134, L139), rested atop a leveling fill of brown earth (L142).

In the northeastern corner of the courtyard, a stone pavement (L149) was built on bedrock. In the foundation of the pavement (L148), a few Bronze Age sherds were found. A short, partially preserved partition wall (W227), between L157 and L149, also served as a retaining wall.It was made of one row of large fieldstones laid at the edge of a rock shelf before it inclined toward the streambed.

*A Northeastern Structure*

In the northeastern edge of the excavated area (Sqs H–I/13–14; Plan 1), the remnants of another, partially preserved structure were unearthed, separated from the large residential structure by an alleyway (1.5 m wide) on its southwest. A fill (L137) in Sq H13, on the southern side of the southern wall of the structure (W222), may have been part of this alleyway. The remains of this structure include W222 (0.5 × 3.0 m), constructed of one row of medium-sized stones, forming a corner with W222a (1.7 × 2.0 m). Wall 222a appears to have been badly disturbed by later Stratum 1 W217 (see below), so that its northern extension was entirely missing. A segment of another wall (W210; 0.5 × 2.0 m), located further north in Sq I14 (unexcavated), may have also been part of this structure, although numerous sherds of the Roman and Byzantine periods were found in adjacent accumulations, indicating that W210 might have belonged to overlying Stratum 1.

The fragmentary state of this structure prevented a reconstruction of its full plan and dimensions. The pottery collected from accumulations related to the structure (L138, L144) dates to EB I (see below).

## Stratum 1: Post-Early Bronze Age

A brown layer of alluvium (L116–119, L122, L126, L128–130, L141; Plan 1), exposed immediately below the surface level in all the excavation squares, contained sherds of the Early Bronze Age, Iron Age II, and the Early Roman, Byzantine and Mamluk periods.

Below this layer, a long terrace wall (W217, W215) was built of large fieldstones, traversing the excavation area from southeast to northwest. Wall 217, constructed over the Stratum 2 EB I remains, is the southeastern segment of this terrace wall (Sq H13); it was preserved to a height of a single course of stones. Wall 215 (Fig. 8), the northwestern segment of the terrace wall, was preserved to a height of 2–3 courses of large stones; it lay on the bedrock against the hewn face of a rock ledge. The accumulations on the northern side of the terrace wall (L122, L126) consisted of *terra rossa* soil with abundant small stones and pottery of the Early and Late Roman, and Byzantine periods, which may have been the result of soil erosion from upslope. A coin, apparently of the first half of the fifth

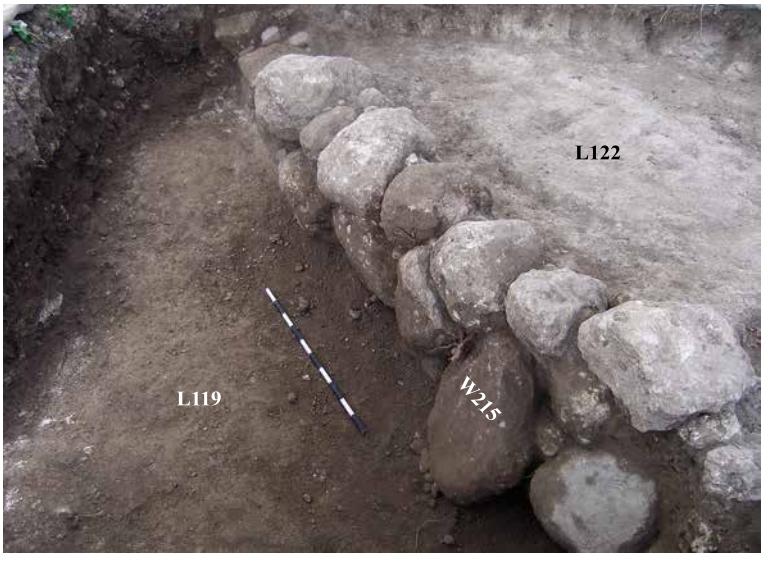


Fig. 8. Stratum 1, Terrace W215 from the Byzantine period, looking north.

century CE, was also found in these accumulations.[2] South of W215 was a thin layer of soil that had accumulated on bedrock (L119); it was devoid of finds. The terrace wall may have been constructed to direct runoff water from upslope into the Wadi ʻIllin channel.

## The Finds

### The Pottery

The 2012 excavation at Ḥ. ʻIllin Taḥtit yielded thousands of pottery sherds, most of which date to EB I. The EB I pottery belongs to the ceramic industries of both EB IA and EB IB. Interestingly, the 2012 assemblage contains abundant EB IA specimens, a phase that was not previously identified at the site.

#### Early Bronze Age IA–B Pottery from the 1990s Excavation

The Early Bronze Age pottery from Braun's excavation at Ḥ. ʻIllin Taḥtit, much of which has not been described in previous publications of the site, was re-examined by Yitzhak Paz.[3] This examination, conducted at the IAA storage facility, showed that EB IA pottery

[2] The coin (IAA 143486) depicts a bust on the right and Victory on the left, on the obverse, and a wreath on the reverse. It appears to be an imitation of the *Securitas Reipublicae* type struck in 364–375 CE; the imitation circulated half a century later. Our thanks to Gabriela Bijovsky for this information.

[3] We are grateful to Eliot Braun for allowing the re-examination of the pottery from his excavation at the site.

is well-represented at the site, despite the absence of deposits and architectural remains from this phase. The EB IA assemblage includes ridged holemouth vessels, made of pale buff-pink clay, and thumbed rim "pie crust" pithoi—the main features of this early ceramic tradition. It was also observed, however, that unlike the EB IA pottery from other regions to the north and west of the Bet Shemesh area, the use of red slip or wash was rare on EB IA vessels at Ḥ. 'Illin Taḥtit. The same can be said of the EB IB pottery vessels from the site, most of which lacked decoration. In contrast, at the EB IB sites of Tel Lod and Rishpon-4, located northwest of the Bet Shemesh area, c. 60% of the pottery is red-washed (Paz, Rosenberg and Nativ 2005: Figs. 23:9; 25:2, 5–7, 10–11, 13, 15–17; 26:1, 2, 10; 27:5, 7–9; Gophna and Paz 2017).

The exceedingly rare presence of red wash on holemouth vessels at Ḥ. 'Illin Taḥtit is particularly notable, as well as the near absence of ridged and ribbed holemouth types, which are common in EB IB contexts elsewhere (see Gophna and Paz 2017). Also rare at the site are carinated bowls of the "Aphek family" (Beck 1985) and proto-platters, known from the late EB IB onward (e.g., Paz, Rosenberg and Nativ 2005: Fig. 23:10). At Ḥ. 'Illin Taḥtit, plain-rim holemouths and holemouths with partial rope decoration comprise the majority of the assemblage.

The examination of the pottery from the 1990's excavation shows an affinity between the Ḥ. 'Illin Taḥtit assemblage and those of the Bet Shemesh region. The EB I ceramic tradition of the Bet Shemesh region is distinct from that of other regions, such as the eastern Ayyalon basin ("Lod Valley"; Gophna and Paz 2014; see *Discussion*, below).

## Early Bronze Age IA Pottery from the 2012 Excavation

No complete or restorable vessels were retrieved from the excavation. The pottery was sorted in the field, where the body sherds were recorded and discarded. Altogether, 233 diagnostic Early Bronze Age sherds were kept for restoration and are described below. The predominant types of vessels in the assemblage are represented by the illustrated sherds (Figs. 9, 10).

All types of vessels, including bowls, holemouths and storage jars are mostly made of pale buff-pink clay. This is in contrast with the variety of clay types used in the production of the EB IB pottery (for a petrographic analysis, see below). Many of the vessels were made of well-levigated clay, in which no inclusions were observed. The vessels appear to have been fired at low temperatures, as many of the larger holemouths and jars have gray cores.

Typological considerations allowed us to differentiate between the EB IA and EB IB pottery. As almost all the excavation loci contained a mixture of both EB IA and EB IB pottery types, a spatial breakdown of the assemblage was not attempted, and the material is presented below by period.

*Bowls*

*Straight-Sided V-Shaped Bowls* (Fig. 9:1, 2).— Only a few small sherds of this type were found. Parallels are found at Azor (Golani and Brink 1999: Fig. 4:3) and Ashqelon-Afridar (Khalaily 2004: Fig. 6:4–6). Number 2 exhibits a red-painted band decoration on its inner side, which resembles a form of decoration found on Chalcolithic vessels of this type.

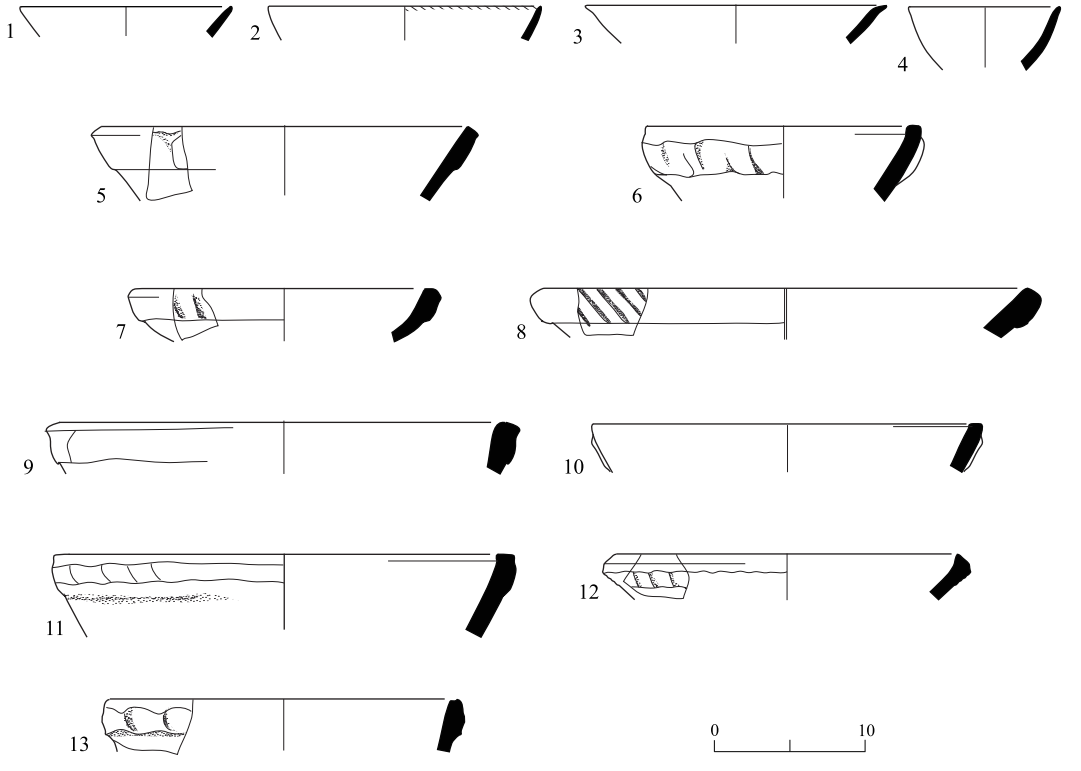


Fig. 9. EB IA pottery: bowls.

| No. | Locus | Basket | Description |
|---|---|---|---|
| 1 | 150 | 1137/9 | Orange clay |
| 2 | 151 | 1141 | Pink clay, red-painted decoration on int. |
| 3 | 123 | 1136/6 | Grayish clay, well-levigated |
| 4 | 150 | 1137/14 | Gray clay |
| 5 | 138 | 1121 | Buff clay, gray core, plastic decoration |
| 6 | 139 | 1136/2 | Buff-white clay, gray core, poorly fired, plastic decoration |
| 7 | 123 | 1092/3 | Pink clay, gray core, plastic decoration |
| 8 | N/A[i] | | Buff clay, gray core, poorly fired, plastic decoration |
| 9 | 148 | 1130/5 | Pink clay, gray core, plastic decoration |
| 10 | 148 | 1130/4 | Pink clay, gray core, plastic decoration |
| 11 | 144 | 1173/5 | Buff-pink clay, gray core, plastic decoration |
| 12 | 123 | 1080/3 | Buff clay, plastic decoration |
| 13 | 145 | 1123/7 | Pink clay, gray core, plastic decoration |

[i] N/A = data not available.

*Shallow, Sinuous-Sided Bowls with Sharp Tapering Rims* (Fig. 9:3).— One specimen of this type, made of buff-light gray well-levigated clay, was found at the site. Bowls with this type of rim appear to have existed throughout EB I. Examples from secure EB IA contexts include sites such as Niẓẓanim Stratum V (Yekutieli and Gophna 1994: Fig. 12:19).

*Deep Bowls with Slightly Tapering Rims* (Fig. 9:4).— This type of bowl has thin walls and a sharp, slightly tapering rim. Although Yekutieli (2000: Fig. 8.3:3) considered these bowls among the hallmarks of the early EB IB Horizon C at Tel 'Erani ('Erani-C; additional parallels can be found at Hartuv, see Mazar and Miroschedji 1996: Fig. 17:6), this type is already known in EB IA contexts at Niẓẓanim (Yekutieli and Gophna 1994: Fig. 12:17) and at Ashqelon-Afridar (Khalaily 2004: Fig. 6:13).

*Thick-Walled Bowls with Applied Plastic Decoration* (Fig. 9:5–13).— This type of bowl is very common at Ḥ. 'Illin Taḥtit. The nine specimens presented here were badly fired. The bowls are medium- or large-sized, and some are deep enough to be considered kraters. The rim shapes vary, including square (No. 5), in-turned (Nos. 10–12) and splayed (No. 13). Plastic rope decoration was attached to the rim or below it. Examples of such bowls are well-known from EB IA strata, e.g., at Yiftaḥ'el (Braun 1997: Fig. 9.5), 'En Esur ('Ein Asawir; Yannai 2006: Figs. 4.35:28; 4.36:3, 15), Ashqelon-Barne'a,[4] Azor (Golani and Brink 1999: Fig. 4:11) and Ashqelon-Afridar (Khalaily 2004: Fig. 6:17).

*Holemouth Vessels*

*Holemouth with Plain, Sharpened Rim* (Fig. 10:1).— In this type of holemouth, the rim shape resembles that of the Chalcolithic holemouth vessels. Parallels are found in EB IA contexts, such as Niẓẓanim Stratum V (Yekutieli and Gophna 1994: Fig. 12:15) and Ashqelon-Barne'a Stratum V (see n. 4).

*Holemouths with Geometric Beveled Rim* (Fig. 10:2–10).— This type of holemouth is very common at Ḥ. 'Illin Taḥtit. Two main variants of this type were identified: one with a plain, square-shaped rim (Nos. 2–6) and another, with an in-turned notch that descends inward (Nos. 7–9). Parallels for these vessels are common in EB IA contexts, such as Yiftaḥ'el (Braun 1997: Fig. 9.10:2), 'En Esur (Yannai 2006: Fig. 4.43:12), Azor (Golani and Brink 1999: Fig. 6:1) and Niẓẓanim (Yekutieli and Gophna 1994: Fig. 12:13). A parallel for Nos. 2 and 3 is known from Hartuv, in an 'Erani-C context (Mazar and Miroschedji 1996: Fig. 19:7). Number 5 had a lug handle attached to it, a parallel for which is known from Yiftaḥ'el (Braun 1997: Fig. 9.10:1).

[4] We wish to thank Amir Golani for allowing Yitzhak Paz to examine the pottery from his excavation at Ashqelon-Barne'a.

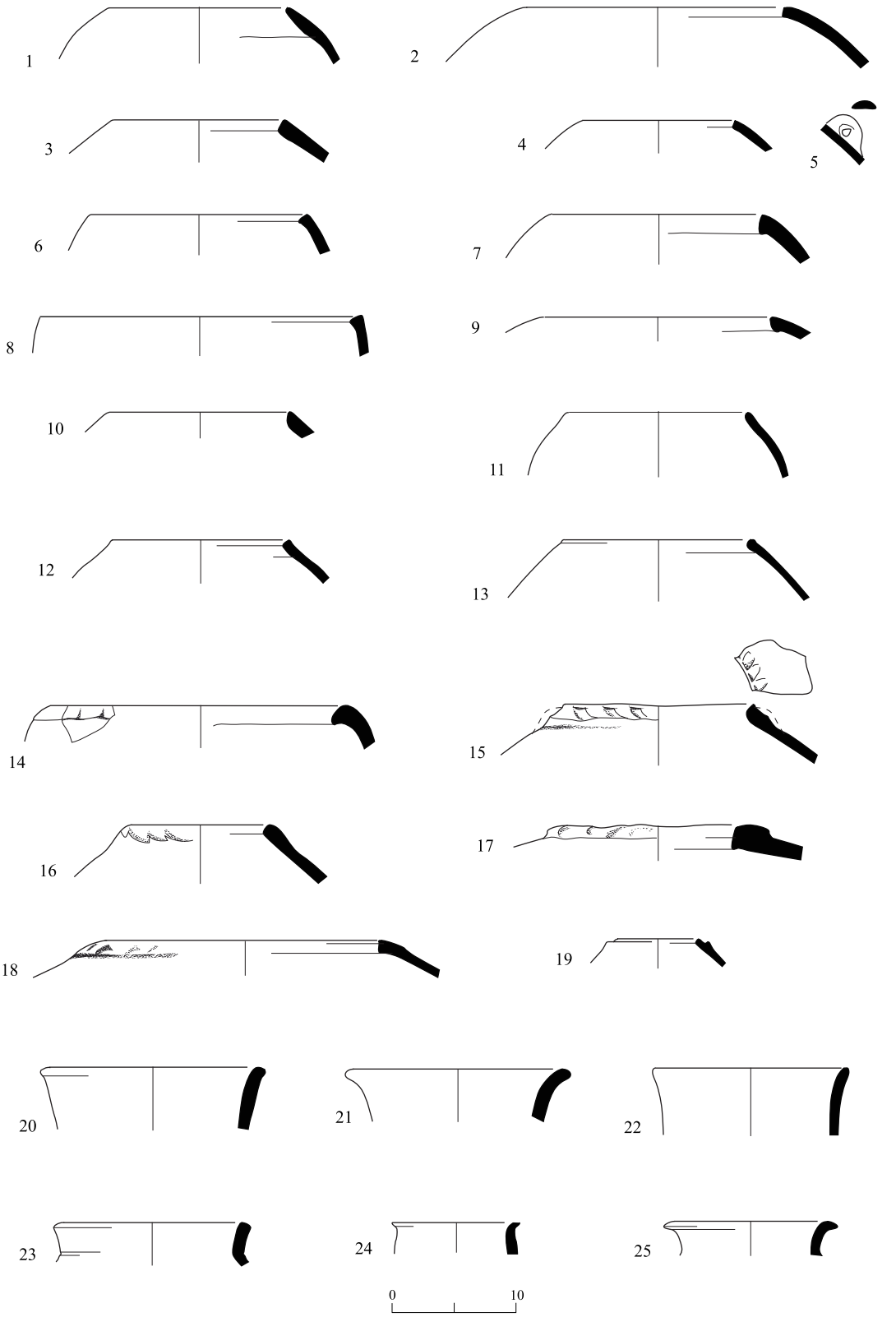


Fig. 10. EB IA pottery: holemouths and jars.

◂ **Fig. 10**

| No. | Type | Locus | Basket | Description |
|---|---|---|---|---|
| 1 | Holemouth | 136 | 1110/17 | Pink clay, gray core |
| 2 | Holemouth | 108 | 1075 | Buff clay |
| 3 | Holemouth | 139 | 1144/12 | Buff clay, gray core |
| 4 | Holemouth | 120 | 1041/4 | Buff |
| 5 | Holemouth | 131 | 1107/1 | Light brown clay |
| 6 | Holemouth | 151 | 1141/4 | Buff clay, gray core, gray grits |
| 7 | Holemouth | 134 | 1185/2 | Brown clay, brown core |
| 8 | Holemouth | 151 | 1141/6 | Buff clay |
| 9 | Holemouth | 138 | 1127 | Buff clay |
| 10 | Holemouth | 127 | 1679/2 | Gray clay, white grits |
| 11 | Holemouth | 123 | 1108 | Buff clay, gray core, poorly fired |
| 12 | Holemouth | 123 | 1108 | Buff clay |
| 13 | Holemouth | 123 | 1048/1 | Buff-pink clay, gray core |
| 14 | Holemouth | 123 | 1090/6 | Pink clay, gray core |
| 15 | Holemouth | 131 | 1124/2 | Buff clay, gray core, poorly fired |
| 16 | Holemouth | 121 | 1093/2 | Buff clay, gray core, many small grits |
| 17 | Holemouth | 149 | 1123/6 | Buff clay, gray core, int. finger smear |
| 18 | Holemouth | 141 | 1112 | Buff clay, gray core, int. finger smear |
| 19 | Holemouth | 149 | | Buff-gray clay |
| 20 | Storage jar | 139 | 1098/1 | Buff-white clay |
| 21 | Storage jar | 139 | 1097/1 | Buff clay |
| 22 | Storage jar | 139 | 1132/1 | Buff-gray clay |
| 23 | Storage jar | 123 | 1092/7 | Pink clay |
| 24 | Storage jar | 142 | 1117 | Buff clay |
| 25 | Storage jar | 123 | 1108/4 | Pink clay, well-levigated |

*Holemouths with Sinuous-Shaped Rim* (Fig. 10:11, 12).— This type of holemouth has thin walls and a curving upper part. The rim is either sharpened or square-shaped. Parallels are known from 'En Esur (Yannai 2006: Figs. 4.37:2; 4.43:15–17) and Ashqelon-Afridar (Khalaily 2004: Fig. 7:12).

*Holemouths with Rounded Thickened "Bulbous" Rim* (Fig. 10:13).— This type of vessel has thin walls and a rounded thickened rim. Parallels are known in EB IA contexts at Yiftaḥ'el (Braun 1997: Fig. 9.12:4), 'En Esur (Yannai 2006: Fig. 4.44:24) and Ḥorbat Ḥani (Lass 2003: Fig. 19:3).

*Holemouth with Rounded Descending Rim* (Fig. 10:14).— This holemouth has a rather squat-shaped body; its rim is rounded and descends inward in the shape of a wave. Parallels were found at sites such as Yiftaḥ'el (Braun 1997: Fig. 9.10:5), 'En Esur (Yannai 2006: Fig.

4.42:14) and Ashqelon-Barne‘a (see n. 4). Although this type of holemouth is usually found in EB IB contexts (e.g., at ‘En Esur), the vessel from Ḥ. ‘Illin Taḥtit should be dated to EB IA, based on the pinkish clay which was used in the production of contemporary vessels at the site.

*Holemouth with Ridged Thumbed "Pie Crust" Rim* (Fig. 10:15–18).— In these vessels, the rim is ridged and has a profiled shape. A variant of this type has an inner notch (No. 17). The rim of these vessels was thumbed to create the very common EB IA "pie crust" design. Close parallels can be found at Yiftaḥ'el (Braun 1997: Fig. 9.10:6), ‘En Esur (Yannai 2006: Figs. 4.46:8; 4.47:12–18), Azor (Golani and Brink 1999: Fig. 8:3) and Ashqelon-Barne‘a Stratum IV (see n. 4). Another possible variant of this type (No. 18) closely resembles No. 17, but lacks the thumbing on the rim. Both variants show traces of the potter's fingers on the inner side of the vessel, beneath the rim, formed while shaping the wet clay.

*Small Ridged Holemouth* (Fig. 10:19).— One specimen of a small, even miniature, holemouth was found. Parallels for this type of vessel are known at Yiftaḥ'el (Braun 1997: Figs. 9.9:2; 9.12:10) and Ashqelon-Barne‘a (see n. 4).

*Storage Vessels*

*Storage Jars with Elongated Neck* (Fig. 10:20–22).— The three sherds presented here are parts of an elongated neck of what appears to have been a storage jar. The rims are either sharpened or profiled. Parallels can be found at sites such as ‘En Esur (Yannai 2006: Fig. 4.39:13) and Azor (Golani and Brink 1999: Fig. 5:1). A parallel similar to No. 21 was found at Yiftaḥ'el, where it was defined as a "jarlet" (Braun 1997: Fig. 9.25:1).

*Storage Jars with Short Everted Rim* (Fig. 10:23–25).— These vessels have short everted rims. Plain rounded rims were much more common in EB IA (e.g., Azor—Golani and Brink 1999: Fig. 5:8–18); however, variants with an angular everted rim and a rectangular profile are known as well. A close parallel was found at Ashqelon-Barne‘a (see n. 4).

Number 24 is a small jar with a short everted rim. Parallels are known from Yiftaḥ'el (Braun 1997: Fig. 9.25:5), Azor (Golani and Brink 1999: Fig. 5:17) and Ashqelon-Afridar (Khalaily 2004: Fig. 9:17).

## Early Bronze Age IB Pottery from the 2012 Excavation

The EB IB pottery from Ḥ. ‘Illin Taḥtit exhibits a wider variety of clay types than that of the EB IA assemblage. In addition to the use of buff-pink clay, bowls were made of orange-red clay, holemouths of brown-red clay and storage vessels of orange, brown or buff clay. Some of the vessels were made of well-levigated clay and well-fired, whereas others were of a coarse fabric and poorly fired. Large inclusions were employed in the manufacture of holemouths—a very common feature of this late EB I tradition. As in the EB IA phase

at Ḥ. 'Illin Taḥtit, the EB IB vessels also lack surface treatment, such as a slip or wash. Exceptions are a specific bowl type, exhibiting red slip and burnish, storage jars, which are often slipped with a white lime substance, and holemouths with a plastic rope decoration. These observations apply also to the EB IB material from Braun's excavation at the site (see n. 3).

*Bowls*

*Hemispherical Bowl with Plain Rim* (Fig. 11:1–3).— This vessel, made of a well-levigated orange clay and well-fired, is a common form both in early and late EB IB contexts. An example of the former type is known from the 'Erani-C horizon at Hartuv (Mazar and Miroschedji 1996: Fig. 17:5), and of the later type, from Shoham (North) (Gophna and Brink 2005: Fig. 7.2:4).

*Carinated Bowls* (Fig. 11:4, 5).— The two specimens presented here are made of well-levigated orange clay. Number 4 is a very small vessel, which has parallels in both EB IA and IB contexts (see, e.g., Braun 1997: Fig. 9.4:13; Beck 2000: Fig. 8.2:26; Khalaily 2004: Fig. 6:7). Number 5 (thin-sectioned for petrographic analysis; see below) is closely affiliated with the widespread group of carinated bowls, the "Aphek family", which typically had horizontal lug handles (Beck 1985). At Ḥ. 'Illin Taḥtit, no slip or burnish was applied to these vessels.

*Platter Bowl* (Fig. 11:6).— This small vessel has a triangular in-turned rim and is made of buff-pink clay. Parallels are found in the 'Erani-C Horizon at Ramat Bet Shemesh (Eisenberg, forthcoming), as well as in late EB IB contexts at al-Maghar (Gophna, Paz and Taxel 2010: Fig. 8:10).

*Deep Bowls with a Flat Triangular Rim* (Fig. 11:7–10).— This type of bowl is a rather large vessel, made of buff-pink clay, with a triangular flat rim. Unlike at other sites, at Ḥ. 'Illin Taḥtit these bowls are intensely red-slipped and burnished, both techniques that are rarely encountered at the site (No. 8 was thin-sectioned for petrographic analysis; see below). Such vessels are common in EB IB contexts, e.g., at Afeq (Beck 2000: Fig. 8.2:23), Tel Lod (Paz, Rosenberg and Nativ 2005: Fig. 23:5) and al-Maghar (Gophna, Paz and Taxel 2010: Fig. 8:4).

*Deep Bowls with In-Turned Rims* (Fig. 11:11–14).— The three specimens presented here are all made of buff-pink clay and have a gray core, indicating a low to medium quality of firing. Numbers 11–13 are coarsely made; vessels of a similar shape are widely distributed in EB IB contexts, e.g., Afeq (Beck 2000: Fig. 8.3:5), Shoham (North) (Gophna and Brink 2005: Fig. 7.2:6), Bet Yeraḥ (Paz 2006: Fig. 7.21) and 'En Esur (Yannai 2006: Fig. 7.54:12).

Number 14 is a large vessel, a vat or a krater, with a horizontal ledged knob. Parallels can be found at 'En Esur (Yannai 2006: Figs. 4.52:18; 4.75:14).

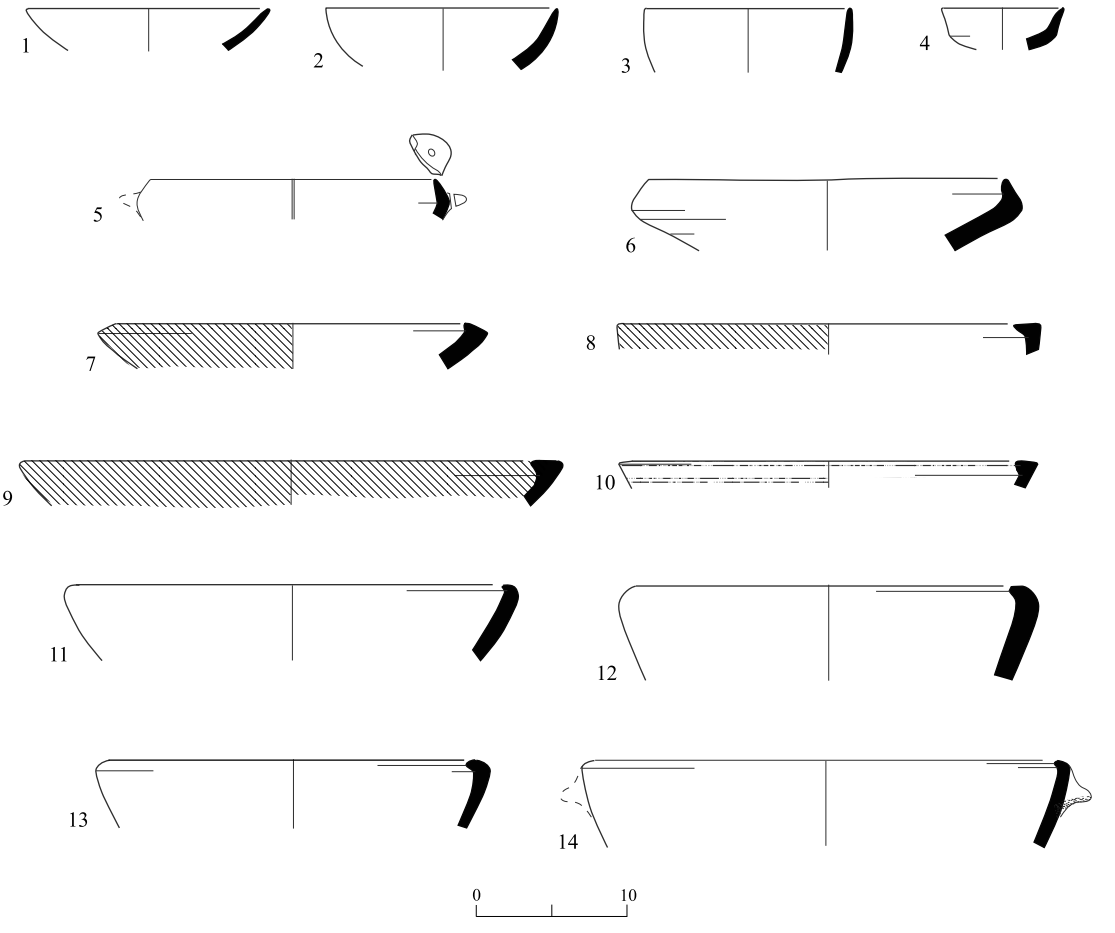


Fig. 11. EB IB pottery: bowls.

| No. | Locus | Basket | Description |
|---|---|---|---|
| 1 | 121 | 1055 | Orange clay, well-fired |
| 2 | 123 | 1092/6 | Light brown clay, gray core, poorly fired |
| 3 | 158 | 1137/14 | Gray clay |
| 4 | 123 | 1134/4 | Orange clay |
| 5 | 113 | 1024/3 | Orange clay |
| 6 | 139 | 1106/3 | Buff-pink clay |
| 7 | 145 | 1136/7 | Orange clay, red slip, burnished |
| 8 | 113 | 1035 | Buff clay, red slip, burnished |
| 9 | 100 | 1006/7 | Pink clay, red wash |
| 10 | 121 | 1042/7 | Orange clay, red slip, burnished |
| 11 | 121 | 1093/1 | Buff clay, gray core |
| 12 | 151 | 1141/1 | Pink clay, gray core |
| 13 | 139 | 1125/3 | Orange clay, white grits |
| 14 | 123 | 1108/2 | Buff clay, gray core |

*Holemouth Vessels*

The EB IB holemouths at Ḥ. 'Illin Taḥtit differ from their EB IA predecessors in the inclusion of large grits within the clay; they are also more coarsely made and their rims are always thickened.

*Holemouth with Plain Thickened Rim* (Fig. 12:1, 2).— These vessels have a rounded thickened rim, which is very common in EB IB contexts at sites such as Tel Lod (Paz, Rosenberg and Nativ 2005: Fig. 24:8), Tel Dalit (Gophna 1996: Fig. 41:2, 4, 5) and Shoham (North) (Gophna and Brink 2005: Fig. 7.3:2).

*Holemouth with "Shark Nose" Rim* (Fig. 12:3–9).— This type of vessel is generally made of red-brown or orange clay, to which large gray and shiny (calcite?) grits were added. The triangular "shark nose" shape of the rim was very common in EB IB contexts, known, e.g., from Tel Lod (Paz, Rosenberg and Nativ 2005: Fig. 24:10–13), Shoham (North) (Gophna and Brink 2005: Fig. 7.3:1) and al-Maghar (Gophna, Paz and Taxel 2010: Fig. 10:10–13).

Numbers 7–9 are variants of this holemouth type, exhibiting a cavity in the lower interior part of the rim. Parallels for this variant are known at EB IB sites such as 'En Esur (Yannai 2006: Fig. 4.55:12) and Tel Lod (Paz, Rosenberg and Nativ 2005: Fig. 24:11).

**Fig. 12 ▸**

| No. | Type | Locus | Basket | Description |
|---|---|---|---|---|
| 1 | Holemouth | 123 | 1108/9 | Buff clay, gray core, soot marks |
| 2 | Holemouth | 138 | 1110/11 | Buff clay, gray core |
| 3 | Holemouth | 139 | 1138/10 | Gray clay, white grits |
| 4 | Holemouth | 126 | 1058/2 | Pink clay, gray core, small grits |
| 5 | Holemouth | 153 | 1143/1 | Orange-red clay, gray core, very coarse, large light grits |
| 6 | Holemouth | 150 | 1137/11 | Orange clay, very coarse, large shiny gray grits |
| 7 | Holemouth | 139 | 1139/11 | Pink clay, gray core |
| 8 | Holemouth | 138 | 1110/8 | Red-brown clay, gray core |
| 9 | Holemouth | 104 | | Buff-pink clay, red wash |
| 10 | Holemouth | 148 | 1130/1 | Orange clay |
| 11 | Holemouth | 150 | 1137/5 | Buff clay, gray core, very coarse, large light grits; plastic decoration |
| 12 | Storage jar | 145 | 1124 | Buff-pink clay, lime wash |
| 13 | Storage jar | 123 | 1108/3 | Orange clay, gray core |
| 14 | Storage jar | 150 | 1137/4 | Orange clay |
| 15 | Storage jar | 150 | 1137/8 | Orange clay |
| 16 | Storage jar | 123 | 1126/3 | Orange clay |
| 17 | Storage jar | N/A[i] | | Orange clay |
| 18 | Storage jar | 134 | 1144/7 | Buff clay, gray core |
| 19 | Storage jar | 139 | 1001/7 | Orange clay, gray core |
| 20 | Storage jar | 139 | 1110/9 | Buff clay, gray core |
| 21 | Vat | 123 | 1108/1 | Buff clay, gray core, poorly fired |

[i] N/A = data not available.

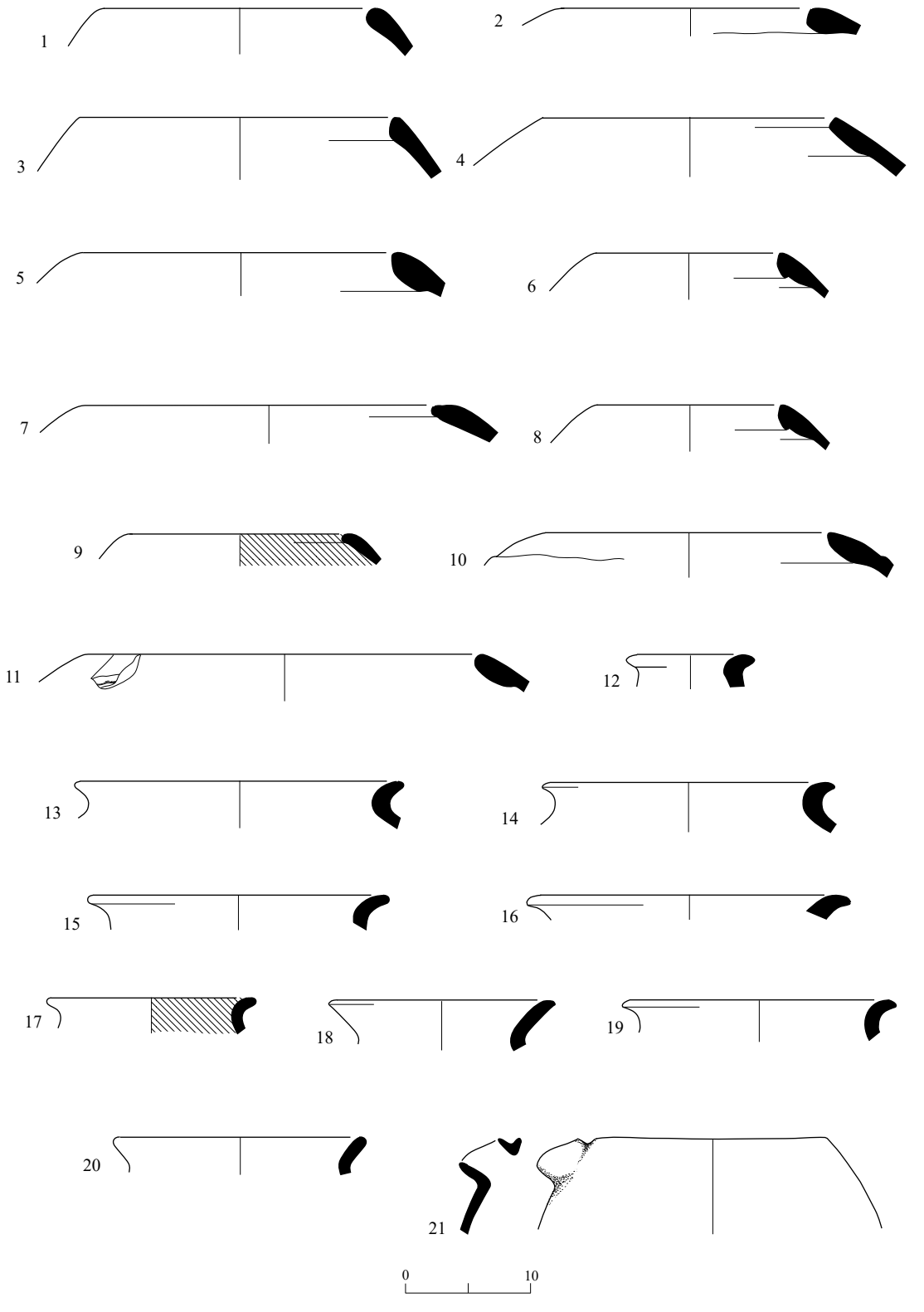


Fig. 12. EB IB pottery: holemouths and storage vessels.

*Furrowed Rim Holemouth* (Fig. 12:10).— One specimen exhibits a thickened rim with a furrow just below it. Parallels for this vessel form were found, for example, at Shoham (North) (Gophna and Brink 2005: Fig. 7.3:5).

*Holemouth with Plastic Rope-Decorated Rim* (Fig. 12:11).— Only a few specimens of this type of holemouth were retrieved in the 2012 excavation, whereas it was common in the earlier excavations at the site (personal examination of the pottery from Braun's excavation; see n. 3). The small fragment presented here belongs to a coarse vessel, made of buff-pink clay, in which large light grits are included. The plastic rope decoration seems to be of the "interrupted" type, i.e., it was applied in a few small separate segments around the contour of the rim, rather than as a continuous band. This type of decoration was common in both early EB IB contexts (e.g., 'Erani-C Horizon at Ashqelon-Barne'a Stratum II [see n. 4] and Ramat Bet Shemesh [Eisenberg, forthcoming]), and late EB IB contexts (e.g., Tel Lod—Paz, Rosenberg and Nativ 2005: Fig. 24:14).

*Storage Vessels*

*Storage Jar with Thickened Everted Rim* (Fig. 12:12).— This small vessel is made of buff-pink clay and has an everted, thickened rim. Parallels were found at Tel Lod (Paz, Rosenberg and Nativ 2005: Fig. 26:10).

*Pithoi with Short, Plain Everted Rim* (Fig. 12:13–20).— The majority of the storage vessels at Ḥ. 'Illin Taḥtit were large pithoi made of various clay types. The rims of these pithoi are rounded, plain, sharpened or everted. This vessel type is common in EB IB contexts at sites such as Shoham (North) (Gophna and Brink 2005: Fig. 7.4:4, 8, 9) and Tel Lod (Paz, Rosenberg and Nativ 2005: Fig. 26:13, 14, 16).

*Spouted Vessel* (Fig. 12:21).— A fragment of a spouted vessel, belonging to a holemouth or a vat, was found at the site. Parallels were found at 'En Esur (Yannai 2006: Fig. 4.54:11).

*Handles* (Fig. 13).— The majority of the handles found at the site are ledge handles, mostly belonging to storage vessels, and are not diagnostic of either the EB IA or IB ceramic traditions. The handles were either plain or thumbed. One handle (Fig. 13:1) carries traces of a white lime wash, which may indicate an EB IB date.

*Petrographic Analysis of Two Early Bronze Age IB Vessels*

Two sherds exhibiting a unique treatment of the exterior were selected for petrographic analysis: (1) a carinated bowl, which may be related to the "Aphek family" of well-levigated and well-fired vessels (Beck 1985); and (2) a deep bowl that was slipped and burnished.

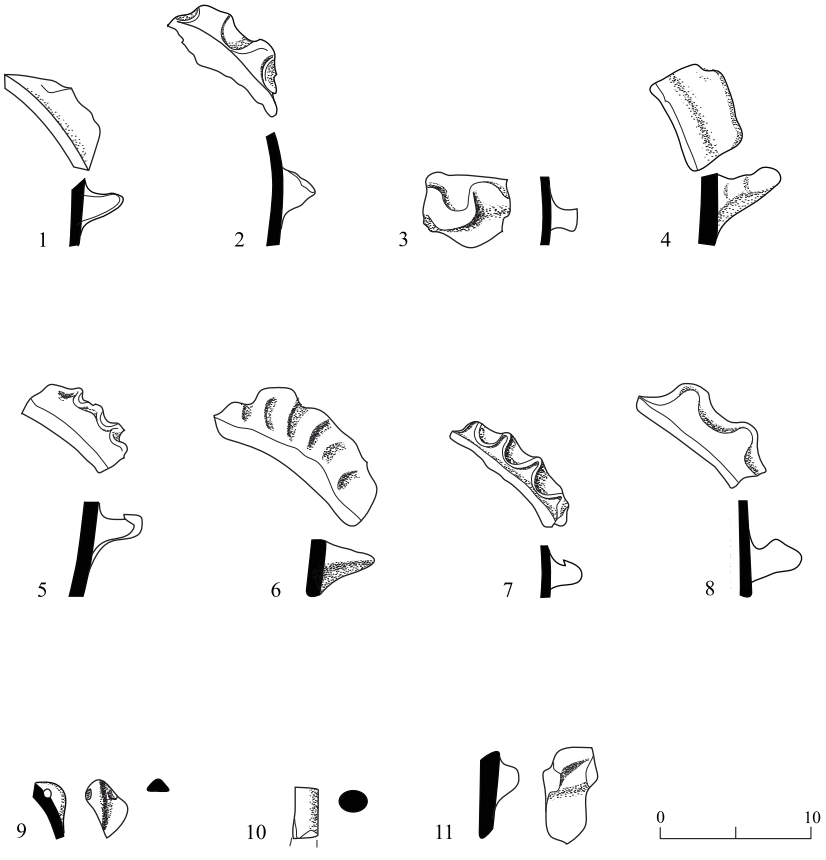


Fig. 13. Pottery handles.

| No. | Locus | Basket | Description |
|---|---|---|---|
| 1 | 150 | 1137/2 | Orange clay, lime wash |
| 2 | 145 | 1123/4 | Buff clay, gray core |
| 3 | 121 | 1042/5 | Buff clay |
| 4 | 126 | 1058/1 | Light brown clay, coarse |
| 5 | 145 | 1136/1 | |
| 6 | 127 | 1077 | Orange clay, burnished |
| 7 | 139 | 1098/1 | Buff clay |
| 8 | 139 | 1125/4 | Buff clay, gray core |
| 9 | 123 | 1092/11 | Light brown clay |
| 10 | 145 | 1771/4 | Light brown clay |
| 11 | 123 | 1048/6 | Orange clay, gray core, lime wash |

*Carinated Bowl* (B1024, L113; Fig. 11:5).— The matrix of this vessel is optically active and characterized by layering. The non-plastic components (f:c ratio$_{\{0.062mm\}}$ = ~90:10)[5] comprise angular grog fragments of up to 0.5 mm, as well as silt- to sand-sized rhomboid-shaped dolomite crystals, which are not homogeneously spread in the paste. A few dolostone fragments also occur. This raw material is identified as originating in the Moẓa Formation, which crops out all along the Judean and Samarian mountain range (Sneh, Bartov and Rosensaft 1998).

*Bowl* (B1035, L113; Fig. 11:8).— The matrix is calcareous and contains silty quartz grains (~3%), a few fine, badly-preserved foraminifera and occasional grains of feldspar, hornblende and mica. The non-plastic components (f:c ratio$_{\{0.062mm\}}$ = ~90:20) comprise angular grog fragments of up to 1 mm, and rarely, sand-sized, rhomboid-shaped dolomite crystals; a fragment of a quartz geode is also present. Some of the grog fragments are identified as made from clay of the Moẓa Formation. The matrix is of an unidentified origin. The Moẓa-made grog fragments may indicate that the production site was located in the Judean Mountains or in the Shephelah, regions where this raw material was used in the production of local pottery (see, e.g., Goren, Finkelstein and Na'aman 2004).

## The Flint Assemblage

A small assemblage of 254 knapped flint artifacts was unearthed at Ḥ. 'Illin Taḥtit. The items were retrieved from various contexts, including fills, accumulations and floors. They were well-preserved, lacking traces of carbonate coating or instances of recent breaks. The assemblage appears to be homogenous in composition. The material from all loci was analyzed as a single assemblage (Table 1), due to the small sample size and the EB IA–B date of most of the contexts from which the artifacts were retrieved. It was not possible to distinguish between EB IA and IB lithic material due to the lack of known typological differences between the industries of these two phases.

The small size of the assemblage is surprising given the extent of the excavated area. As sieving was employed only in contexts that could be clearly ascribed to the Early Bronze Age during the excavation, and in some cases 1 × 1 cm mesh screens were substituted for 0.5 × 0.5 cm ones, it is possible that some small items were lost during the excavation. Although there may be other reasons for the low sample size, it is noted that the composition of the assemblage, especially the high frequency of tools, is typical of manually picked assemblages. In fact, the frequency of tools in this assemblage (16.5%) is higher than their frequency in the Early Bronze Age strata of Braun's 1990's excavation at the site, where

[5] The f:c ratio expresses the relative proportion of the fine (f) and coarse (c) components of a fabric. In this case, the boundary between these two components is 0.062 mm, which is the boundary between silt and sand size (Kemp 1985:22).

**Table 1. General Count of the Lithics**

| Type | N | % |
|---|---|---|
| *Debitage* | | |
| Primary elements | 8 | 7.1 |
| Flakes | 80 | 71.4 |
| Blades | 5 | 4.5 |
| Bladelets | 4 | 3.6 |
| CTEs | 15 | 13.4 |
| *Total debitage* | *112* | *100.0* |
| *Debris* | | |
| Chips | 4 | 5.8 |
| Chunks | 65 | 94.2 |
| *Total debris* | *69* | *100.0* |
| Tools | 42 | 16.5 |
| Cores | 29 | 11.4 |
| Hammerstones | 2 | 0.8 |
| *Grand Total* | *254* | *100.0* |

**Table 2. Flint Tool Frequencies**

| Type | N | % |
|---|---|---|
| *Expedient Tools* | | |
| Awls | 3 | 7.1 |
| Denticulates | 4 | 9.5 |
| Endscraper | 1 | 2.4 |
| Sidescrapers | 3 | 7.1 |
| Steep scraper | 1 | 2.4 |
| Notches | 7 | 16.7 |
| Truncations | 2 | 4.8 |
| Retouched flakes | 6 | 14.3 |
| Retouched blades | 4 | 9.5 |
| Varia | 4 | 9.5 |
| *Formal Tools* | | |
| Sickle blades | 4 | 9.5 |
| Tabular scraper | 1 | 2.4 |
| Bifacial tools | 2 | 4.8 |
| *Total* | *42* | *100.0* |

no sieving was conducted (10.2%; Marder, Braun and Milevski 1995:64, 72, Table 5). The almost complete absence of chips is also of note in this respect. Therefore, the compositional breakdown of the assemblage cannot be considered as representative of the actual lithic disposal at the site. At best, it can be stated that on-site knapping activity is indicated by the presence of waste products of all types, irrespective of their overall low frequency.

The excavation focused on exposing EB I occupation remains. Hence, one of the aims of the lithic analysis was to assess the presence of intrusive elements from deposits overlying the EB I layer and the possibility of mixing with earlier material from the Late Neolithic period previously uncovered at the site (Marder, Braun and Milevski 1995; Braun 2008). A broader goal was to compare the present assemblage with the results of other lithic studies of EB I sites in the region.

*Raw Material*

The majority of the items were made of brecciated flint of the Senonian–Eocene Meshash Formation. This flint, which appears in a variety of colors, ranging from dark brown to gray, can be found in outcrops in close proximity to the site. Its knapping properties vary greatly, depending on fractures and veins often found within it. The extensive use of this raw material cannot, therefore, be attributed to its quality, but rather to its availability to the inhabitants of the site. This low-quality raw material was used in the manufacture of the simplest tools, but not of the formal tools, whose production required greater precision.

Other raw materials that are represented in smaller quantities include homogenous gray flint and semi-translucent brown flint, both of local origin, as well as "crackled" white flint and what seems to be "banded" flint, each represented by a single item. The material of a chunk made of the white "crackled" flint is characterized by a dense web of tiny black veins. A sickle blade made of the banded flint is pale brown in color, with stripes of brown and white color. The parent geological formation of this type of raw material lies in Transjordan, and it can also be found as pebbles in streambeds in the northern and western Negev.

*Cores*

The cores are mostly small (<5 cm long) and exhibit 5–7 removal scars. Flake cores with a single striking platform (n = 12; Fig. 14:1–3) together with amorphous cores (n = 10) are the dominant core types. The remainder of the cores is made up of flake cores with two striking platforms (n = 3; Fig. 14:4), core fragments (n = 3) and a single non-Canaanean blade core. Thus, blade cores are greatly outnumbered by flake cores in the assemblage. Some of the flake cores display a few bladelet removals. About half of the cores (n = 16), notably the single-platform cores, retain much of their cortex (20%–50%), whereas the others have very little of their cortex remaining (0–20%). The cores were made of pebbles of either gray-brown Meshash flint or homogenous gray flint in more-or-less equal numbers, regardless of their type or of the category of debitage produced.

*Waste Products*

Flakes are by far the dominant waste product; they are nearly nine times more frequent than the blades and bladelets combined. This is in accordance with the composition of core types, which included only one blade core. The few blades and bladelets found show no morphological standardization, and were most probably unintentional by-products of flake manufacture. In particular, the bladelets may have been produced in the final stages of the exploitation of flake cores and hence, a few of the cores exhibit both flake and bladelet scars while true blade/bladelet cores are absent.

Primary elements include only flakes. These elements are conspicuously scarce, taking into account the relatively small size of the flint pebbles from which the debitage was detached and the high frequency of primary flakes previously reported at the site (18.3%; Marder, Braun and Milevski 1995:72, Table 6).

Other than a single core tablet, the core-trimming elements (CTE) consist mainly of overshot pieces and relatively thick flakes of surface rejuvenation. The frequency of the latter flakes is somewhat higher than expected, given the small size of the cores and the otherwise lack of evidence for their maintenance. It is doubtful that the detachment of such pieces contributed to efficient core exploitation. Possibly, these were the last pieces to be removed from the cores before their abandonment, rather than the product of beginning a new knapping sequence.

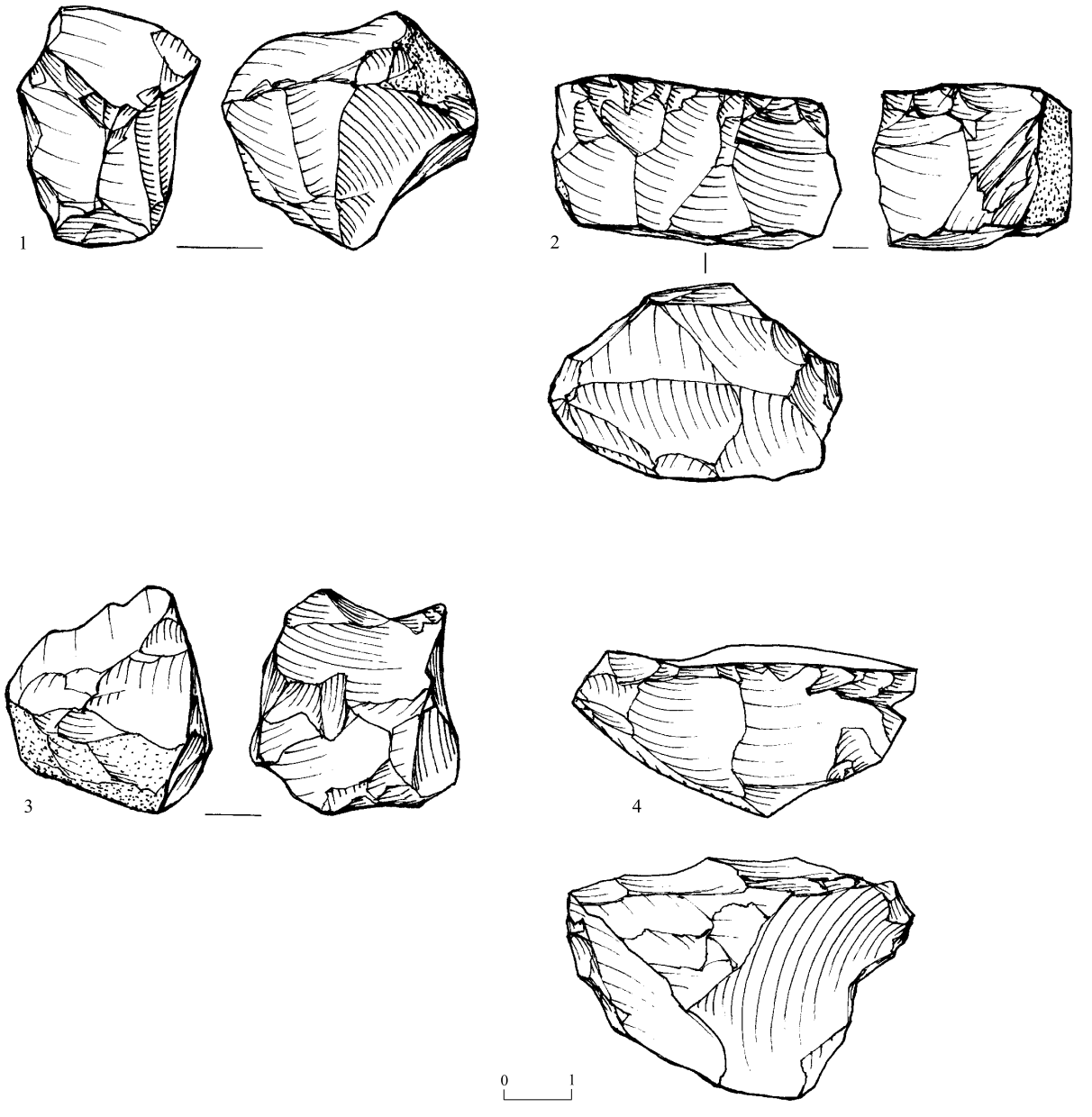


Fig. 14. Cores: (1–3) single-platform cores; (4) double-platform core.

*Tools*

The tools can be divided into two groups: expedient types, comprising more than 80% of the tools in the assemblages; and formal types, including Canaanean blades, tabular scrapers and bifacial tools, the latter of an intrusive origin (Table 2).

*Sickle Blades*.— Two sickles were made on Canaanean blades. One (Fig. 15:1; 34.9 × 22.2 × 5.2 mm) was made of brown Eocene flint; both of its working edges are finely retouched

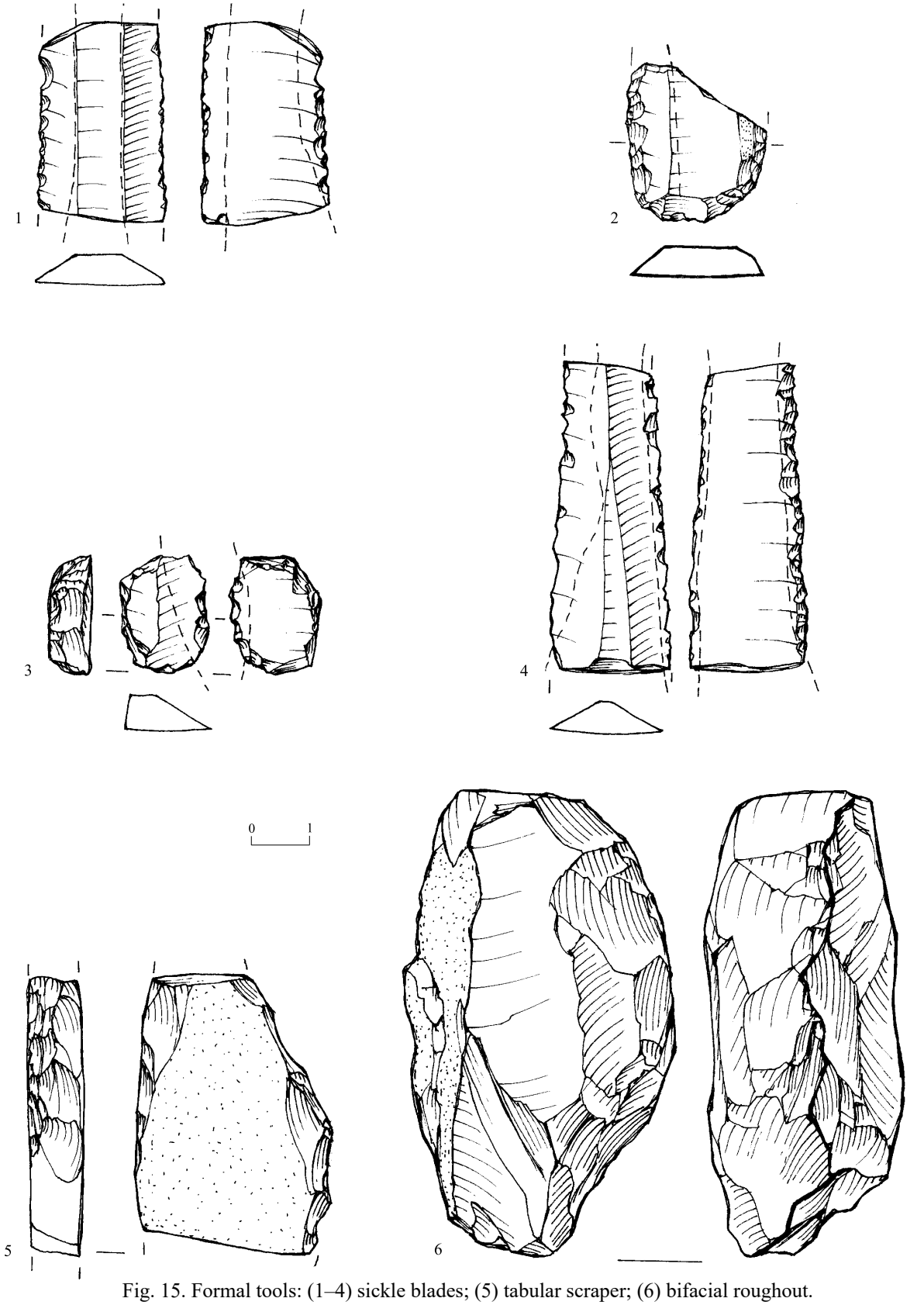


Fig. 15. Formal tools: (1–4) sickle blades; (5) tabular scraper; (6) bifacial roughout.

and covered with gloss on both faces, indicating that once the original working edge became worn, the item was rotated and then inserted once again into the haft. The other sickle (Fig. 15:2; 27.4 × 24.3 × 4.7 mm) is a fragment that was made on the truncated, proximal end of a Canaanean blade. It has a denticulated working edge and is backed by semi-abrupt retouch. Although bearing no gloss, this item was identified as a sickle blade, as it was most probably prepared with the intention of being used as such.

A short, thick fragment of a sickle blade (Fig. 15:3; 20.4 × 15.1 × 6.2 mm) was made of dark brown flint. It has an irregular fine retouch and gloss on one edge. At some time, it was reshaped by an abrupt, invasive retouch on its other edge and both of its ends, probably in order to be put into secondary use.

One sickle blade (Fig. 15:4; 52.5 × 20.3 × 5.4 mm) was made of banded flint. It presents a regular retouch on one side and serration on the other, and has convergent ridges on its dorsal side. Along one of the ventral sides, a thin coating (<1 mm thick) of a pale gray material can be seen. This coating can be traced all along the item, although it is best preserved near the proximal end, and extends c. 7 mm from the edge. No similar coating was found on any other item in the assemblage. It should be noted that the item was washed in water, as was the rest of the lithic material. Given the location of the coating material and its appearance, it may be identified as plaster that was purposefully spread along the item's edge in order to serve as a bonding material in hafting. Previous excavations at Ḥ. ʻIllin Taḥtit yielded a large number of Canaanean blades presenting remains of a black material, probably bitumen, which was used for the same purpose (Marder, Braun and Milevski 1995:77, and see *Conclusions,* below).

*Tabular Scraper*.— A fragment of a tabular scraper (Fig. 15:5), made on dark brown–gray flint, is covered with a white limestone cortex and has abrupt retouch along its edge. The break is partially covered with a stepped retouch, indicating that the item was recycled. Broken tabular scrapers transformed into borers were previously reported at the site (Marder, Braun and Milevski 1995:82).

*Bifacial Tools*.— A fragmentary bifacial tool was found; its edge was so intensively resharpened that it was hard to determine whether the tool was originally an axe or an adze. One roughout of a bifacial tool was also identified (Fig. 15:6; 76.5 × 42.5 × 30.3 mm). It was made on a rectangular block of Meshash flint, and shaped only on one of its lateral sides before the item was abandoned.

*Truncations*.— Two truncated pieces were made on primary elements (Fig. 16:1); one of these was also retouched.

*Awls*.— These tools were made on thick, short flakes (<3 cm long). In one case (Fig. 16:2), a broken bifacial tool, probably a chisel, was used for this purpose.

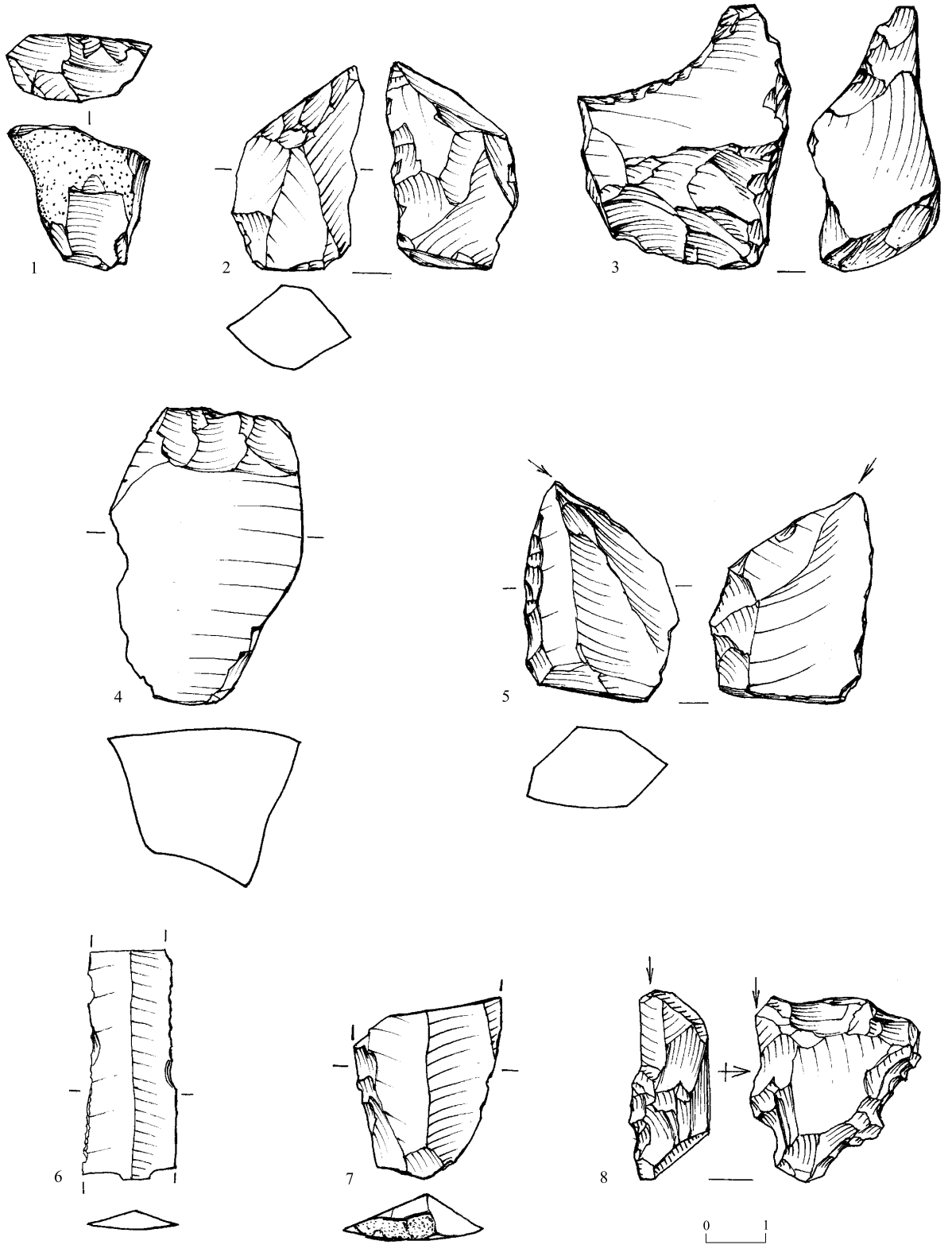


Fig. 16. Ad-hoc tools: (1) truncation; (2) awl; (3) notch; (4) sidescraper; (5) steep scraper; (6) retouched blade; (7) blade with signs of use; (8) multipurpose tool (notch/burin).

*Notches*.— The notches form a varied group. Most were made on small flakes (n = 4; <2 cm long) and include one inverse notch. The remaining items are somewhat larger, although the notches tend to be rather shallow (e.g., Fig. 16:3).

*Denticulates*.— Three denticulates were made on either thick or primary flakes and bear intensive, crude retouch, while a fourth is a broken tool with a series of small notches made on a thinner flake.

*Endscraper*.— The only endscraper in the assemblage was made on a primary element. Much of its retouched working end was struck off at a later time.

*Sidescrapers*.— One sidescraper was made on an oval flake, made of gray, homogenous partially decertified flint. It bears an abrupt to semi-abrupt retouch on both edges, and probably on its tip as well, and perhaps should be seen as a crude imitation of a tabular scraper. A fragment of a similar tool (Fig. 16:4) was made of flint of a somewhat lesser quality. A third sidescraper has a stepped retouch on one side and a simple retouch on part of its other side, which is otherwise naturally backed.

*Steep Scraper*.— This tool (Fig. 16:5) was made of a thick flake (c. 2 cm thick), whose longer end was abruptly shaped by intensive blows and finer retouch. It bears a notch on the other end.

*Retouched Flakes*.— The retouched flakes were made on relatively thick blanks (c. 1 cm thick), including two CTEs and one flake that was detached from a core on a flake. The retouch is abrupt, semi-abrupt or fine, and is rarely regular.

*Retouched Blades*.— One thin, broken rectangular blade (Fig. 16:6), triangular in cross-section, shows some evidence of use on its edges. Three additional retouched blades are non-standardized and bear fine irregular retouch or signs of use (e.g., Fig. 16:7).

*Varia*.— This group includes three multipurpose tools: an awl/burin (Fig. 16:8), a notch/denticulate and a notch/truncation. Also included is one exhausted core, which shows heavy battering marks on one of its scars, indicating secondary use; this item should possibly be classified as a *pièce esquillée*.

*Hammerstones*

Two rounded flint pebbles, both broken, bear battering marks and occasional scars on their outer faces, indicating their use as hammerstones.

*Conclusions*

The majority of the Ḥ. 'Illin Taḥtit flint assemblage consists of debitage, which is chronologically non-diagnostic, and ad-hoc tools. This makes the identification of intrusive elements difficult, as characteristics such as the high abundance of flakes made on simple cores of local raw materials are not unique to the Early Bronze Age lithic industry of the Shephelah. Nonetheless, judging from the composition of the tools, it appears that the degree to which earlier lithic items occur within the Early Bronze Age stratum is limited. The only items that clearly do not belong in this stratum and must be attributed to the Neolithic/Chalcolithic period are the two bifacial tools and the chisel/awl described above, amounting to c. 7% of the tools in the assemblage. Also of note in this respect are a few crude items—two chunks and a broken flake—with extensive patina of orange and black colors, which are most probably of Paleolithic age. The assemblage can, therefore, be largely regarded as representing the EB I industry alone.

The results of the analysis match those of previous studies of lithics from Ḥ. 'Illin Taḥtit (Marder, Braun and Milevski 1995) and other Early Bronze Age assemblages (e.g., Rosen 1983; 1997). As is typical of the EB I period, the Ḥ. 'Illin Taḥtit assemblage consists of three distinct components: (1) flakes produced from local raw materials, of which expedient tools (80% of the tool assemblage) were made—their knapping took place on-site, as is indicated by the presence of cores, debris, debitage and tools; (2) Canaanean blades, which are represented by sickle blades/reaping knives and by plain blanks, clearly indicating that they were imported to the site, either as finished tools, or as blades—the quality of these blades indicates that they were produced by specialists; (3) tabular scrapers were also likely imported to the site, most probably from the Negev highlands, perhaps for cultic purposes (Rosen 1997:74, and see references therein)—when broken, they were reshaped into other tool types.

One of the sickle blades, which is made of banded flint and exhibits the remains of a plaster coating, is of interest. This type of raw material was not reported from the Late Neolithic or Early Bronze Age strata in the previous excavation at Ḥ. 'Illin Taḥtit, nor from other Early Bronze Age sites in the Shephelah region (Omry Barzilai, pers. comm.). Sickle blades made of banded flint are, however, typical of the Chalcolithic period in the northern Negev, and appear in small numbers at Chalcolithic sites in the Shephelah as well, e.g., Kh. 'Aliya (East) (Hermon 2008:67), Ḥorbat 'Illit B (Milevski et al. 2013) and Bet Shemesh (Vered, forthcoming). Provided that the identification of the raw material as "banded flint" is correct, it is possible that the sickle blade from Ḥ. 'Illin Taḥtit does not belong to the Early Bronze Age assemblage at the site, and is rather of an earlier origin, perhaps of the Ghassulian phase of the Chalcolithic period. Morphologically, however, the blade is not unlike other non-Canaanean blades that were produced ad-hoc at Ḥ. 'Illin Taḥtit and at other Early Bronze Age sites (Rosen 1997:49–50), and does not reveal any features which would indicate a period other than the Early Bronze Age.

As for the traces of plaster found on the same sickle blade, the use of plaster as an adhesive for hafting sickle blades is known from the Southern Levant, although mostly from the

second millennium BC onward (Vardi 2011:42). The use of bitumen for this purpose, on the other hand, was widespread during the Early Bronze Age, as documented at Jericho, ʻArad and Ashqelon-Afridar, among other sites (Milevski 2011: Table 9.1). At Ḥ. ʻIllin Taḥtit, traces of black material identified as bitumen were recorded on nearly half of the Canaanean sickle blades, as well as on several Canaanean blanks, retrieved in the 1990s excavation; the identification of this residue as bitumen is supported by the discovery of bitumen lumps in both the 1990s (Marder, Braun and Milevski 1995:77) and 2012 excavations. The presence of the sickle blade with traces of plaster in the 2012 excavation is especially conspicuous when considering the proximity of this excavation area to that of the previous excavation at the site, where bitumen rather than plaster was applied extensively to sickle blades. Thus, both the plaster coating on the sickle blade and its manufacture from banded flint are at odds with the earlier findings at Ḥ. ʻIllin Taḥtit, as well as with the general knowledge of the Early Bronze Age archaeological record. These inconsistencies may be taken as an indication of the problematic context and dating of the sickle blade in question.

Providing that the plaster-coated sickle blade does belong to the Early Bronze Age assemblage, the seemingly exclusive use of plaster with locally-produced ad-hoc blades and of bitumen with non-local, specialized Canaanean blades at Ḥ. ʻIllin Taḥtit begs an explanation. Unlike the locally available plaster, bitumen was a mineral acquired by trade, likely from sources in the Dead Sea (Milevski 2011:164–169), and may have been reserved for the maintenance of the more valued Canaanean sickle blades. In addition, functional considerations related to the physical properties of each of the two adhesive materials, and to the larger size and weight of the Canaanean blades, could also have played a role in the choice of the adhesive used on either type of blade. It is also worth noting that the majority of sites yielding bitumen remains are located in the southern part of Israel, and that bitumen has not been found in sites north of the Lod Valley (Milevski 2011:169). The occurrence of both plaster and bitumen remains on sickle blades at Ḥ. ʻIllin Taḥtit could be related to the northern location of the site within the distribution area of bitumen-bearing tools.

## Faunal Remains

The excavation at Ḥ. ʻIllin Taḥtit yielded a small assemblage (n = 76) of faunal remains, retrieved from 12 loci (L120–121, L123, L131, L134, L138–139, L142, L145, L150–151, L153). Due to the small assemblage size, differences among the remains from different contexts of the site will not be considered.

### *Methods*

Faunal remains were collected by hand and retrieved from sieves of a 0.5 × 0.5 or 1 × 1 cm mesh. The bones were washed with water and dried in the shade. All remains, including limbs and cranial fragments, were identified to biological taxon or, in cases where this was not possible, were assigned to size groups, "medium-sized mammal" (the size of caprines, a sheep or a goat) or "large-sized mammal" (the size of cattle). The identification was based

on morphological comparison of the bones with reference material, using the National Osteological Collections of the Hebrew University.

Long bone fragments were documented by assigning them to one of five parts of the bone: proximal epiphysis, proximal shaft fragment, central shaft fragment, distal shaft fragment and distal epiphysis, and noting the percentage surviving relative to the complete element. The other bone fragments were assigned to diagnostic zones (following Dobney and Rielly 1988). The minimum number of elements (MNE) of the long bones was calculated by summing the percentage survival values of the bone fragments (Klein and Cruz-Uribe 1984; Lyman 2008). Quantification of the fragments of other skeletal elements was based on the method of counting only those which represent diagnostic parts of the bone, and noting the most abundant diagnostic part as the MNE (following Dobney and Rielly 1988). Due to the small assemblage size, skeletal element representation was also assessed based on the number of identified specimens (NISP).

Signs of bone surface modification were examined in every specimen that was identified to element by inspecting the surface on each side of the bone with a magnifying glass under a lamp (Blumenchine, Marean and Capaldo 1996). A record was made of evidence of human impact, including cut marks and burn marks (Binford 1981; Rixson 1989), and bone breakage patterns, indicating whether the bone was broken intentionally when fresh in order to retrieve the marrow or unintentionally when dry (Villa and Mahieu 1991). Also noted were signs of natural impact on the bones, such as weathering (Behrensmeyer 1978) and biting or chewing by predators (Binford 1981; Blumenschine, Marean and Capaldo 1996).

The bones of caprines were assigned to sheep or goat based on known morphological differences between the two species in specific skeletal elements (Payne 1973; Zeder and Lapham 2010). Bones that could not be securely assigned to either sheep or goat were allocated a separate category of "sheep/goat". Estimating the age of the animals in the assemblage was based on observations on the state of epiphyseal fusion in long bones (Silver 1969; Zeder 2006) and on the extent of erosion of the teeth (Grant 1982). The bones were measured using a digital caliper, accurate to 0.1 mm, following Driesch 1976 (for bone measurements, see Table 7, below).

*Results*

The assemblage from Ḥ. 'Illin Taḥtit includes 76 bones, teeth and horns that could be assigned to anatomical element and taxon or size group (Tables 3, 4). Forty-four of these remains could be identified to taxon, whereas the rest were assigned only to the size group. All the identified remains belong to mammals.

The identified remains were mostly those of domestic herd animals. Sheep and goat remains form the majority of the assemblage (NISP = 28, 63.6%). This percentage could have been greater considering that most of the bones assigned to the medium-sized mammal group likely belonged to sheep/goat. Three remains were identified as sheep and two as goat, together representing at least two individuals. Cattle (NISP = 14, 31.8%) is the second most abundant species in the assemblage, represented by at least two individuals. In addition, one

**Table 3. Bone Counts by Locus and Taxon**

| Locus | Caprine | Sheep | Goat | Cattle | Equid | Gazelle | Medium-Sized Mammals | Large-Sized Mammals | Total |
|---|---|---|---|---|---|---|---|---|---|
| 120 | 2 | | | | | | 1 | | 3 |
| 121 | 1 | | | 1 | | | | | 2 |
| 123 | 1 | | | 1 | | | 2 | 1 | 5 |
| 131 | 4 | | | 1 | | | 4 | | 9 |
| 134 | 1 | | | | | 1 | | | 2 |
| 138 | | | | | | | 1 | | 1 |
| 139 | 6 | 2 | 2 | 2 | 1 | | 7 | 5 | 25 |
| 142 | 1 | | | 1 | | | | | 2 |
| 145 | 2 | | | 6 | | | 3 | 2 | 13 |
| 150 | 4 | 1 | | 2 | | | 4 | | 11 |
| 151 | 1 | | | | | | | | 1 |
| 153 | | | | | | | 2 | | 2 |
| *Total* | *23* | *3* | *2* | *14* | *1* | *1* | *24* | *8* | *76* |

**Table 4. Frequencies of Animal Taxa (NISP)**

| Taxon | NISP | % |
|---|---|---|
| *Capra hircus* and *Ovis aries* (Caprines) | 28 | 63.6 |
| *Bos taurus* (Cattle) | 14 | 31.8 |
| *Equus* sp. (Equid) | 1 | 2.3 |
| *Gazella gazella* (Gazelle) | 1 | 2.3 |
| *Total taxa* | *44* | *100.0* |
| Medium-sized mammals | 24 | 75.0 |
| Large-sized mammals | 8 | 25.0 |
| *Total size class* | *32* | *100.0* |
| *Grand total* | *76* | *100.0* |

worn tooth of a horse or a donkey (2.3%) and one bone of a gazelle (2.3%) were identified. The absence of pig remains is notable.

A detailed analysis of the representation of different skeletal elements was not possible due to the small assemblage size, although it can be noted that for sheep, goat and cattle, nearly all parts of the animal body are represented (Table 5). The absence of cattle cranial remains may be due to the small assemblage size. In sheep, goat and cattle there is a high frequency of the more meaty skeletal elements, indicating that they may represent the remains of food consumption activities, although elements from less meaty parts of the

**Table 5. Skeletal Element Representation (NISP and MNE) of Caprines (together with Medium-Sized Mammals) and Cattle (together with Large-Sized Mammals)**

| Element/Portion | Caprine | | Cattle | |
|---|---|---|---|---|
| | NISP | MNE | NISP | MNE |
| Mandible (w/o teeth) | 3 | 1 | | |
| *Total skull* | *3* | *1* | | |
| Vertebra, cervical | 1 | 1 | | |
| Vertebra, lumbar | | | 1 | 1 |
| Rib | 5 | 2 | | |
| Pelvis | 2 | 1 | 2 | 1 |
| *Total axis* | 8 | 4 | 3 | 2 |
| Scapula | 4 | 2 | 2 | 2 |
| Humerus | 4 | 1 | | |
| Radius | 4 | 2 | 1 | 1 |
| *Total forelimb* | *12* | *5* | *3* | *3* |
| Femur | 2 | 1 | | |
| Tibia | 3 | 1 | 4 | 1 |
| Calcaneus | 1 | 1 | 4 | 3 |
| *Total hind limb* | *6* | *3* | *8* | *4* |
| Metacarpus | 5 | 3 | 2 | 1 |
| Metatarsus | 4 | 2 | | |
| Phalanx 1 | 2 | 2 | 2 | 2 |
| Phalanx 3 | 1 | 1 | | |
| *Total feet* | *12* | *8* | *4* | *3* |
| *Total* | *37* | *21* | *18* | *14* |

skeleton, which could indicate the presence of slaughtering waste, are also represented. It is, therefore, possible that the animals were both slaughtered and consumed near the excavated area.

The age at death of the animals could be assessed for only a few specimens. The data collected were not sufficient to reconstruct the age profiles of the main herd species in the assemblage. Three specimens of sheep or goat are shown to belong to animals slaughtered at the age of 1–2.5 years. Two additional specimens belong to animals that survived beyond the age of 2.5 years. For the rest of the sheep and goat remains, although the exact age of slaughter could not be established, it was noted that none of them were younger than one year. The age of death calculated for the five specimens of cattle shows that they were slaughtered at the age of 1.5–3 years, save for one that belonged to an older individual (Table 6).

The extent of bone weathering was evaluated according to Behrensmeyer (1978): 17 (60.7%) were classified as level 2; 10 (35.7%), as level 3; and one, as level 4. This indicates

**Table 6. State of Epiphyseal Fusion and Tooth Wear for Caprine and Cattle**

| Taxon | Element | Fused/Unfused | Age (years) |
|---|---|---|---|
| Caprine | Radius, proximal | Fused | >0.5 |
| | Radius, proximal | Fused | >0.5 |
| | Humerus, distal | Fused | >1 |
| | Scapula | Fused | >1 |
| | Scapula | Fused | >1 |
| | Phalanx 1 | Fused | >1.5 |
| | Phalanx 1 | Fused | >1.5 |
| | Metacarpus, distal | Unfused | >2.5 |
| | Metacarpus, distal | Fused | >2.5 |
| | Metacarpus, distal | Fused | >2.5 |
| | Mandible (M3) | G | Adult |
| | Mandible (M2) | C | Young adult |
| Cattle | Scapula | Fused | >1 |
| | Phalanx 1 | Fused | >1.5 |
| | Calcaneum | Unfused | >3 |
| | Calcaneum | Unfused | >3 |
| | Metacarpus, distal | Fused | >3 |
| | Mandible (M2) | C | Young adult |

a relatively low degree of weathering. None of the remains showed the impact of fire or predators.

Four bones bear cut marks: two, a cattle radius and a sheep/goat humerus, bear signs of meat removal; and two, a cattle lumbar vertebra and a cervical vertebra of a medium-sized mammal, bear chopping marks. Half of the fractures of long bones were of the spiral type, indicating that their breakage occurred when the bone was fresh, perhaps for obtaining the marrow (but see Marom 2016). The morphology of the rest of the long bone fractures reflects the breakage of dry bones, possibly after their burial.

*Conclusions*

The faunal remains from Ḥ. ʻIllin Taḥtit suggest an economy based on sheep, goat and cattle. In spite of the small size of the assemblage, the composition of skeletal elements indicates that the slaughtering and consumption of the animals were conducted in proximity to the site. Some of the long bones may have been fractured in order to retrieve the marrow. There is evidence that some of the sheep and goats were slaughtered as adults; however, as it was not possible to establish a culling profile for the assemblage, it is unclear for which economic purpose the flocks were kept, milking, wool production or meat consumption. The fact that all the individuals were older than one year fits with the demographic profile previously documented at the site (Allentuck 2013:126) and at other sites of the Early Bronze Age (Horwitz 2003). This has been explained as a mixed strategy of herd keeping for the production of both meat and secondary products (Horwitz 2003; Allentuck 2013:169).

The scant data on cattle mortality indicate the slaughtering of adults, and in one case of an older animal. These animals may have been kept as a source of meat and secondary products, as well as for labor, as indicated by the presence of the older individual. Data on cattle remains from the previous excavation at the site revealed some bone pathologies, also indicating their use for labor (Allentuck 2013:172).

The absence of pig remains is of interest, as pigs were reported in the previous excavation of Ḥ. 'Illin Taḥtit (Allentuck 2013), and are generally known in EB I contexts. High pig frequencies, exceeding 20% and even reaching 50%, are known from sites located in regions richer in water such as Tell esh-Shuneh (North) (Croft 1994), Qiryat Ata (Horwitz 2003; Agha 2014) and Azor (Horwitz 1999), whereas further south, in more arid regions, pigs are much scarcer (e.g., at 'Arad, where only a few bones were found, Lernau 1978). In sites located in the central hill region, where water availability is relatively low, e.g., 'Ai (Hesse and Wapnish 2001), or Tel Dalit (Horwitz, Hellwing and Tchernov 1996) at the periphery of this region, the frequency of pig remains is often low, not exceeding 10%. This is also the case at Ḥ. 'Illin Taḥtit (Allentuck 2013). The absence of pigs in the 2012 excavation at Ḥ. 'Illin Taḥtit may, however, be due to the small sample size, as was the case at other sites (e.g., 'En Besor, n = 24, Horwitz et al. 2002; Jebel Abu Thawab, n = 49, Köhler-Rollefson 2001), or to intra-site variation in the distribution of pig remains.

**Table 7. Bone Measurements** (in mm; following Driesch 1976; with the exception of HTC = vertical diameter of trochlea at its central constriction, after Davis 1996)

| Taxon | N | Locus | Element | Notes | SLC | GLP | LG | BG | |
|---|---|---|---|---|---|---|---|---|---|
| Cattle | 21 | 139 | Scapula | Fused | 47.1 | 56.3 | 49.8 | 42.3 | |
| Sheep/Goat | 49 | 139 | Scapula | Fused | 16.3 | 27.5 | 23 | 18 | |
| Sheep/Goat | 51 | 139 | Scapula | Fused | | 31.9 | | | |
| | | | | | BT | HTC | | | |
| Sheep/Goat | 38 | 145 | Humerus | Fused | 29.5 | 14.5 | | | |
| | | | | | BP | BFp | SD | | |
| Sheep/Goat | 18 | 120 | Radius | Fused | 28.1 | 27.4 | | | |
| Sheep/Goat | 22 | 139 | Radius | Fused | 28.2 | 27.1 | 17.2 | | |
| | | | | | Bp | Dp | SD | Bd | Dd |
| Cattle | 1 | 150 | Metacarpus | Fused | | | | 53.28 | 27.2 |
| Cattle | 43 | 145 | Metacarpus | Fused | 60.46 | 34.38 | | | |
| Sheep | 45 | 139 | Metacarpus | Fused | | | | 27.68 | 17.97 |
| Sheep/Goat | 37 | 121 | Metatarsus | | 18.7 | 17.5 | | | |
| | | | | | GLpe | Bp | SD | Bd | |
| Cattle | 14 | 121 | 1 st Phalanx | Fused | | | 27.4 | 30.8 | |
| Cattle | 41 | 142 | 1 st Phalanx | Fused | | 27.5 | 24 | | |
| Goat | 44 | 139 | 1 st Phalanx | Fused | 32.26 | 11.44 | 8.82 | 9.69 | |
| Sheep | 62 | 139 | 1 st Phalanx | Fused | 33.8 | 13.4 | 10.2 | | |

## Discussion

*Settlement History of Ḥorbat ‘Illin Taḥtit*

The results of the 2012 excavation, combined with the analysis of the pottery from Braun’s excavation, indicate that the beginning of the settlement at Ḥ. ‘Illin Taḥtit was during EB IA. The lack of architectural remains from this period could be explained by the razing of the earlier remains in preparation for the establishment of the subsequent EB IB settlement. Another possibility is that some early structures were partly reused in the later phase of settlement, although no evidence for this was detected in the excavations.

The EB IA settlement was probably abandoned, followed by a gap in the early phase of EB IB (EB $IB_1$, following Yekutieli 2002). The absence of pottery of the ‘Erani-C Horizon at Ḥ. ‘Illin Taḥtit, although it was common at nearby sites in the Bet Shemesh region, such as Ramat Bet Shemesh (Eisenberg, forthcoming), Hartuv (Mazar and Miroschedji 1996) and Eshta’ol (Y. Paz, personal observation of the pottery from the 2013 excavation at the site), supports the possibility that such a settlement gap took place.

The settlement at Ḥ. ‘Illin Taḥtit resumed during late EB IB (EB $IB_2$, following Yekutieli 2002), when it reached its zenith (see below). Nearby, the sites of Ramat Bet Shemesh, Hartuv and Eshta’ol were abandoned at this time and not resettled in the late fourth millennium BC; at Eshta’ol, there may have been a phase of partial reoccupation.[6] A contemporaneous settlement of this period is known from the site of Beqo‘a within the same region (Golani, Storchan and Eirich-Rose 2018).

The EB IB settlement at Ḥ. ‘Illin Taḥtit was deserted by the end of the fourth millennium BCE, as was evidenced from Braun’s excavation (Braun 2008); no subsequent occupation was observed at the site.

*Settlement Planning in the Early Bronze Age IB*

The two structures exposed in the 2012 excavation share the same general east–west orientation, and are separated by a narrow alleyway. This resembles the settlement layout uncovered in the much larger area excavated in the 1990s (see plan in Braun 2008).

The evidence from the excavated residential units of both the 1990s and 2012 excavations, including the rectangular units, the agglomeration of insular compounds and the narrow streets which separate them, reflects at least some degree of planning. The variation observed in the architectural layouts of EB IB sites seems to defy any notion of a typical settlement layout at this time. However, certain features of what might be considered an organized settlement layout do repeatedly occur in many EB IB sites, such as Eshta’ol, Hartuv, Ḥorbat Petora, Palmaḥim Quarry, Beqo‘a and Shoham (North) Stratum II.

---

[6] We wish to thank Amir Golani, Benyamin Storchan and Jacob Vardi for this information.

The EB IB strata at Eshta'ol, Hartuv and Ḥorbat Petora may represent a chronological phase which predates the EB IB architecture at Ḥ. 'Illin Taḥtit, contemporary with that site's settlement gap in EB $IB_1$ (see Yekutieli 2000; 2002). It is significant that the architecture of this plausible early phase of EB IB, which corresponds to 'Erani-C Horizon and Naqada IIIa2 in Egypt (see, e.g., Braun and Brink 1998), comprises well-built rectangular structures and straight alleyways and streets, and is considered to represent the earliest instances of settlement planning. These features of settlement planning were clearly demonstrated in recent excavations, e.g., at Eshta'ol (Golani and Storchan 2014; Golani et al. 2016). At that site, the structures were rather large, mostly rectangular, either right-angled or with rounded corners, and well-built, with walls up to 1 m in width. Some of the structures revealed monumental features, including walls of even greater width, pavements of flat stones and large pillar bases, indicating that they may have been public buildings (see, e.g., the "temple" at Hartuv, Mazar and Miroschedji 1996). Similar architecture was uncovered at the site of Ḥorbat Petora, where an extensive settlement was excavated (Milevski and Baumgarten 2008).

The subsequent chronological phase, EB $IB_2$, dated between 3200/3150 and 3050 BCE (see Yekutieli 2000), is characterized by a strong Egyptian presence in the region, evidenced, for example, by a widespread distribution and abundance of Egyptian pottery and artifacts in Canaanite settlements, such as Shoham (North) and Tel Lod (see, e.g., Yannai and Marder 2000). This is also the case at Ḥ. 'Illin Taḥtit, where numerous Egyptian pottery sherds and other objects were unearthed in Braun's excavation.

The EB $IB_2$ settlement layout and architecture closely resembles those exposed at Shoham (North), Palmaḥim Quarry, Beqo'a and Qiryat Ata. As opposed to the well-organized settlement planning and extensive buildings of EB $IB_1$, during this phase, the residential compounds were loosely organized and the rectangular structures often have rounded corners and are connected by long walls to a smaller, rounded structure, probably used for storage (Golani 1999; 2003:64).

The excavations at Ḥ. 'Illin Taḥtit revealed neither rounded structures nor amorphic loosely organized compounds. On the contrary, the plan of this site shows some resemblance to that of the fortified towns of the succeeding EB II period, e.g., Tel Bareqet (Paz and Paz 2007) and 'Arad Stratum III (Amiran 1978: Plan 178). This resemblance was already suggested by S. Paz (2010:50–51), who pointed to the uniqueness of Ḥ. 'Illin Taḥtit in terms of settlement pre-planning. Paz considered Tel Bareqet and 'Arad as settlements that partly accepted the "urban parcel." These settlements were fortified and adopted rectangular architecture and a degree of town planning, but still maintained some of the characteristics of the "old order" of EB I village life in the form of multiroomed compounds (Paz 2010:50–51). This model of early urbanism in the EB II period of Tel Bareqet and 'Arad cannot, however, account for the EB IB settlement at Ḥ. 'Illin Taḥtit. Although many similarities are noted between the pottery assemblages of Ḥ. 'Illin Taḥtit and Tel Bareqet, including the forms of several complete vessel types—especially the appearance of storage jars with a double pair of handles and of red washed jugs with high loop handles (see Paz and Paz

2007; Braun 2008)—the respective strata of the two sites appear to represent separate chronological phases. The EB IB date of Ḥ. ‘Illin Taḥtit is firmly established by the presence of Naqada IIIb1–c Egyptian pottery, while the EB II date of Tel Bareqet is confirmed by the Northern Canaanite Metallic Ware and high-quality carinated bowls (see, e.g., Beck 1985; Greenberg and Porat 1996).

An additional factor which complicates the understanding of the chronological relationship between Ḥ. ‘Illin Taḥtit and Tel Bareqet concerns the sequence of occupation at the site of Shoham (North), located less than 1 km from Tel Bareqet. During the 1992 and 2007 excavations at this site, a late EB IB settlement was uncovered (Stratum II), in which Naqada IIIb1–c Egyptian pottery was found along with local pottery, as well as mixed architecture of both the rectangular and rounded forms. The subsequent Stratum I at Shoham (North) contained the remains of only rectangular structures, although this stratum could not be securely dated, due to the near absence of pottery which could be clearly assigned to structures. This settlement was abandoned at the very end of the late EB IB period, and the settlement shifted to the elevated hill of Tel Bareqet, where a fortified settlement was established. It is possible that some pottery types from the earliest phase of occupation at Tel Bareqet belong to the final phase of the EB I ceramic tradition, and that this phase is contemporaneous with Shoham (North) Stratum I. However, the majority of the pottery from the fortified town represents a full-fledged new tradition, closely affiliated with ceramic assemblages of EB II horizons in sites from southern Israel.

At the same time, a comparison between the ceramic assemblages of Ḥ. ‘Illin Taḥtit (Braun’s Strata IV–III) and Shoham (North) (Strata II–I), both dated to the late EB IB, reveals more differences than similarities. This, however, can be attributed to regional variation, as Ḥ. ‘Illin Taḥtit was part of the Judean Shephelah region, whereas Shoham (North) was part of the Lod Basin, eastern Ayyalon–Yarqon region.

A possible explanation for these observations is that Ḥ. ‘Illin Taḥtit was still an EB IB village at the time that Tel Bareqet developed into a fortified town. In Table 8, it is proposed that Ḥ. ‘Illin Taḥtit Stratum III in Braun’s excavation was chronologically later than Shoham (North) Stratum II, and contemporaneous with an early stage of the occupation at

**Table 8. Chronological Comparison between Ḥ. ‘Illin Taḥtit and Other Sites in the Bet Shemesh Region and in the Lod Valley during the Early Bronze Age**

| Site / Date (BCE) | Shoham (North) | Tel Bareqet | Ḥ. ‘Illin Taḥtit | Beqo‘a | Hartuv | Eshta’ol | Period |
|---|---|---|---|---|---|---|---|
| 3650–3300 | | | Occupation | | | | EB IA |
| 3300–3150 | | | | | Temple? | Settlement | Early EB IB |
| 3150 | Settlement II | | Settlement Stratum IV (Braun 2008) | Settlement | | | Late EB IB |
| 3100 | Settlement I | Few sherds | Settlement Statum III (Braun 2008) | ? | | | Late EB IB |

Tel Bareqet. Based on the ceramic assemblages alone, nonetheless, Ḥ. 'Illin Taḥtit Stratum III and Shoham (North) Stratum II both belonged to an earlier cultural tradition than the one encountered at Tel Bareqet. The early signs of settlement planning at Ḥ. 'Illin Taḥtit raise the possibility that this late EB IB settlement was in fact a town, possibly even fortified, although no evidence of a defense system was found at the site; this, however, may be due to the limited extent of the excavations.

## Conclusions

The results of the 2012 excavation at Ḥ. 'Illin Taḥtit complement Braun's earlier findings in terms of architecture, pottery and lithic traditions of the Early Bronze Age, as well as the exposure of architectural features postdating the Early Bronze Age, such as the terrace walls. The location of the 2012 excavation, in an area adjacent to the Wadi 'Illin streambed, where the bedrock slopes moderately toward the stream, likely represents the fringes of the settlement, whereas its center (Braun's excavation) was located c. 30 m east, at a somewhat more elevated position. In the present excavation, the accumulations above bedrock did not exceed 1 m in depth, and consequently, remains from periods preceding the Early Bronze Age were not found. This stands in contrast to the situation in Braun's excavation, where the accumulations reached 3 m in depth and included Neolithic and Chalcolithic remains below the Early Bronze Age strata (Braun 2008). It is, however, possible that during these earlier periods of occupation, the settlement was confined to the higher elevation of the 'Illin spur.

The presence of EB IA pottery in both the 2012 excavation and in Braun's excavation suggests the existence of an extensive settlement at the site during this period. The site was not occupied in the early EB IB period, and occupation resumed in late EB IB.

## References

Agha N. 2014. Faunal Remains from the Early Bronze Age Site of Qiryat Ata—Area N. *'Atiqot* 79:45–57.

Allentuck A.E. 2013. *Human-Livestock Relations in the Early Bronze Age of the Southern Levant*. Ph.D. diss. University of Toronto. Toronto.

Amiran R. 1978. *Early Arad* I: *The Chalcolithic Settlement and Early Bronze City; First–Fifth Seasons of Excavations, 1962–1966* (Judean Desert Studies). Jerusalem.

Avner R. 2000. Ḥorbat 'Illin. *HA–ESI* 111:105*.

Beck P. 1985. An Early Bronze Age "Family" of Bowls from Tel Aphek. *Tel Aviv* 12:17–28.

Beck P. 2000. Area B: Pottery. In M. Kochavi. *Aphek-Antipatris* I: *Excavations of Areas A and B; The 1972–1976 Seasons* (Tel Aviv University Institute of Archaeology Monograph Series 19). Tel Aviv. Pp. 93–133.

Behrensmeyer A.K. 1978. Taphonomic and Ecologic Information from Bone Weathering. *Paleobiology* 4:150–162.

Binford L.R. 1981. *Bones: Ancient Men and Modern Myths*. New York.

Blumenschine R.J., Marean C.W. and Capaldo S.D. 1996. Blind Tests of Inter-Analyst Correspondence and Accuracy in the Identification of Cut Marks, Percussion Marks and Carnivore Tooth Marks on Bone Surfaces. *JAS* 23:493–507.

Braun E. 1994. Lower Ḥorvat ʻIllin. *ESI* 12:79–80.

Braun E. 1997. *Yiftaḥ'el: Salvage and Rescue Excavations at a Prehistoric Village in Lower Galilee, Israel* (IAA Reports 2). Jerusalem.

Braun E. 2008. ʻIllin Taḥtit, Ḥorvat. *NEAEHL* 5. Pp. 1789–1790.

Braun E. and Brink E.C.M. van den. 1998. Some Comments on the Late EB I Sequence of Canaan and the Relative Dating of Tomb Uj at Umm el-Gaʻab and Graves 313 and 787 from Minshat Abu Omar with Imported Ware: Views from Egypt and Canaan. *Egypt and the Levant* 7:71–94.

Conder C.R. and Kitchener H.H. 1883. *The Survey of Western Palestine* III: *Juda.* London.

Croft P. 1994. Some Preliminary Comments on Animal Remains from the First Three Seasons at Shuna. In D. Baird and G. Philip. Preliminary Report on the Third (1993) Season of Excavations at Tell esh-Shuna North. *Levant* 26:130–131.

Dagan Y. 2010. *The Ramat Bet Shemesh Regional Project: The Gazetteer* (IAA Reports 46). Jerusalem.

Davis S.J.M. 1996. Measurements of a Group of Adult Female Shetland Sheep Skeletons from a Single Flock: A Baseline for Zooarchaeologists. *JAS* 23:593–612.

Dobney K. and Rielly K. 1988. A Method for Recording Archaeological Animal Bones: The Use of Diagnostic Zones. *Circaea* 5:79–96.

Driesch A. von den. 1976. *A Guide to the Measurement of Animal Bones from Archaeological Sites* (Peabody Museum Bulletin 1). Cambridge, Mass.

Eisenberg E. Forthcoming. *The EB I and LB II Sites at Khallat el-Himara (Naḥal Yarmut) and Later Archeological Remains.*

Golani A. 1999. New Perspectives on Domestic Architecture and the Initial Stages of Urbanization in Canaan. *Levant* 31:123–133.

Golani A. 2003. *Salvage Excavations at the Early Bronze Age Site of Qiryat Ata* (IAA Reports 18). Jerusalem.

Golani A. and Brink E.C.M. van den. 1999. Salvage Excavations at the Early Bronze Age IA Settlement of Azor. *ʻAtiqot* 38:1–49.

Golani A. and Storchan B.D. 2014. Eshta'ol—A Proto-Historic Site in Transition: Preliminary Inter/Intra-Site Observations. In G.D. Stiebel, O. Peleg-Barkat, D. Ben-Ami and Y. Gadot eds. *New Studies in the Archaeology of Jerusalem and Its Region*, *Collected Papers* VIII. Jerusalem. Pp. 18*–31*.

Golani A., Storchan B.D., Be'eri R. and Vardi J. 2016. Eshta'ol, Areas H and J—2013. *HA–ESI* 128 (February 12). http://www.hadashot-esi.org.il/report_detail_eng.aspx?id=24911&mag_id=124 (accessed December 9, 2019).

Golani A., Storchan B. and Eirikh-Rose A. 2018. The Chalcolithic and Early Bronze Age IB Site of Beqo'a. *'Atiqot* 90:9–54.

Gophna R. 1996. *Excavations at Tel Dalit: An Early Bronze Age Walled Town in Central Israel.* Tel Aviv.

Gophna R. and Brink E.C.M. van den. 2005. The Early Bronze Age I Pottery. In E.C.M. van den Brink and R. Gophna. *Shoham (North): Late Chalcolithic Burial Caves in the Lod Valley, Israel* (IAA Reports 27). Jerusalem. Pp. 99–105.

Gophna R. and Paz Y. 2014. From Village to Town to Village Again: Settlement Dynamics in the Central Coastal Plain and Adjacent Shephelah from the Late Early Bronze Age I to Early Bronze Age III. *Strata BAIAS* 32:13–35.

Gophna R. and Paz Y. 2017. Excavations at Rishpon 4, Tel Aviv (1978–1990). In A. Gopher, R. Gophna, Eyal R. and Y. Paz eds. *Jacob Kaplan's Excavations of Protohistoric Sites 1950s–1980s* II (Tel Aviv University Institute of Archaeology Monograph Series 36). University Park, Pa.–Tel Aviv. Pp. 627–648.

Gophna R., Paz Y. and Taxel I. 2010. Al-Maghar: An Early Bronze Age Walled Town in the Lower Soreq Valley and the EB IB–II Sequence in the Central Coastal Plain of Israel. *Strata BAIAS* 28:9–37.

Goren Y., Finkelstein I. and Na'aman N. 2004. *Inscribed in Clay: Provenance Study of the Amarna Letters and Other Ancient Near Eastern Texts* (Tel Aviv University Institute of Archaeology Monograph Series 23). Tel Aviv.

Grant A. 1982. The Use of Tooth Wear as a Guide to the Age of Domestic Ungulates. In B. Wilson, C. Grigson and S. Payne eds. *Ageing and Sexing Animal Bones from Archaeological Sites* (BAR British S. 109). Oxford. Pp. 91–108.

Greenberg R. and Porat N. 1996. A Third Millennium Levantine Pottery Production Center: Typology, Petrography, and Provenance of the Metallic Ware of Northern Israel and Adjacent Regions. *BASOR* 301:5–24.

Greenhut Z. 2004. Early Islamic Remains at Ḥorbat 'Illin (Upper). *'Atiqot* 47:15*–32* (Hebrew; English summary, pp. 210–211).

Hermon S. 2008. *Socio-Economic Aspects of Chalcolithic (4500–3500 BC) Societies in the Southern Levant: A Lithic Perspective* (BAR Int. S. 1744). Oxford.

Hesse B. and Wapnish. P. 2001. Commodities and Cuisine: Animals in the Early Bronze Age of Northern Palestine. In S.R. Wolff ed. *Studies in the Archaeology of Israel and Neighboring Lands in Memory of Douglas L. Esse* (SAOC 59/ASOR Books 5). Chicago–Atlanta. Pp. 251–282.

Horwitz L.K. 1999. The Fauna. In A. Golani and E.C.M. van den Brink. Salvage Excavations at the Early Bronze Age IA Settlement of Azor. *'Atiqot* 38:33–39.

Horwitz L.K. 2003. Early Bronze Age Animal Exploitation at Qiryat Ata. In A. Golani. *Salvage Excavations at the Early Bronze Age Site of Qiryat Ata Valley* (IAA Reports 18). Jerusalem. Pp. 225–241.

Horwitz L.K., Hellwing S. and Tchernov E. 1996. Patterns of Animal Exploitation at Early Bronze Age Tel Dalit. In R. Gophna. *Excavations at Tel Dalit: An Early Bronze Age Walled Town in Central Israel*. Tel Aviv. Pp. 193–216.

Horwitz L.K., Tchernov E., Mienis H.K., Hakker-Orion D. and Bar-Yosef Mayer D.E. 2002. The Archaeozoology of Three Early Bronze Age Sites in Naḥal Besor, North-Western Negev. In E.C.M

van den Brink and E. Yannai eds. *In Quest of Ancient Settlements and Landscapes: Archaeological Studies in Honour of Ram Gophna*. Tel Aviv. Pp. 107–133.

Kemp R.A. 1985. *Soil Micromorphology and the Quaternary* (Quaternary Research Association Technical Guide 2). London.

Khalaily H. 2004. An Early Bronze Age Site at Ashqelon, Afridar—Area F. *ʻAtiqot* 45:121–159.

Klein R.G. and Cruz-Uribe K. 1984. *The Analysis of Animal Bones from Archaeological Sites*. Chicago.

Köhler-Rollefson I. 2001. The Animal Bones. In Z.A. Kafafi. *Jebel Abu Thawwab (er-Rumman), Central Jordan: The Late Neolithic and Bronze Age I Occupations* (Yarmouk University Monograph of the Institute of Archaeology and Anthropology 3). Berlin. Pp. 211–213.

Lass E.H.E. 2003. An Early Bronze Age IB Burial Cave and a Byzantine Farm at Ḥorbat Ḥani (Khirbet Burj el-Ḥaniya) (West). *ʻAtiqot* 44:1–51.

Lernau H. 1978. Faunal Remains, Strata III–I. In R. Amiran. *Early Arad* I: *The Chalcolithic Settlement and Early Bronze Age City; First–Fifth Seasons of Excavations, 1962–1966*. Jerusalem. Pp. 83–113.

Lyman L.R. 2008. *Quantitative Paleozoology*. Cambridge.

Marder O., Braun E. and Milevski I. 1995. The Flint Assemblage of Lower Ḥorvat ʻIllin: Some Technical and Economic Considerations. *ʻAtiqot* 27:63–93.

Marom N. 2016. Fragmentation in Zooarchaeological Assemblages: The Role of Equifinal, Random Processes. *JAS Reports* 8:11–14.

Mazar A. and Miroschedji P. de. 1996. Hartuv, an Aspect of the Early Bronze I Culture of Southern Israel. *BASOR* 302:1–40.

Milevski I. 2011. *Early Bronze Age Goods Exchange in the Southern Levant: A Marxist Perspective*. London.

Milevski I. and Baumgarten Y. 2008. Between Lachish and Tel ʻErani: Horvat Ptora, a New Late Prehistoric Site in the Southern Levant. In J.M. Córdoba, M. Molist, C. Pérez, I. Rubio and S. Martínez eds. *Proceedings of the 5th International Congress on the Archaeology of the Ancient Near East: Madrid, April 3–8, 2006*. Madrid. Pp. 609–626.

Milevski I., Vardi J., Gilead I., Eirikh-Rose A., Birkenfeld M., Mienis H.K. and Horwitz L.K. 2013. Excavations at Ḥorbat ʻIllit B: A Chalcolithic (Ghassulian) Site in Haelah Valley. *JIPS* 43:73–147.

Mizrahi S. 2012. Bet Shemesh, Wadi ʻIllin. *HA–ESI* 124 (December 31). http://www.hadashot-esi.org.il/report_detail_eng.aspx?id=2182&mag_id=119 (accessed December 9, 2019).

Payne S. 1973. Kill-off Patterns in Sheep and Goats: The Mandibles from Aşvan Kale. *Anatolian Studies* 23:281–303.

Paz S. 2010. *Life in the City: The Birth of an Urban Habitus in the Early Bronze Age of Israel.* Ph.D. diss. Tel Aviv University. Tel Aviv (Hebrew; English summary, pp. I–VIII).

Paz Y. 2006. Area UN: The Ussishkin-Netzer Excavations, 1967. In R. Greenberg, E. Eisenberg, S. Paz and Y. Paz. *Bet Yeraḥ. The Early Bronze Age Mound* I: *Excavations Reports, 1933–1986* (IAA Reports 30). Jerusalem. Pp. 277–338.

Paz Y. and Paz S. 2007. Tel Bareket—Excavations in a Fortified City of the Early Bronze Age II in the Central Coastal Plain. *Qadmoniot* 134:82–88 (Hebrew).

Paz Y., Rosenberg D. and Nativ A. 2005. Excavations at Lod: Neolithic and Chalcolithic Remains and an Egyptian Presence in the Early Bronze Age. *Salvage Excavation Reports* 2:114–158.

Rixson D. 1989. Butchery Evidence on Animal Bones. *Circaea* 6:49–62.

Rosen S.A. 1983. *Lithics in the Bronze and Iron Ages in Israel*. Ph.D. diss. University of Chicago. Chicago.

Rosen S.A. 1997. *Lithics after the Stone Age: A Handbook of Stone Tools from the Levant*. Walnut Creek–London–New Delhi.

Seligman J. and May N. 1994. Upper Ḥorvat 'Illin. *ESI* 12:76–78.

Silver I.A. 1969. The Aging of Domestic Animals. In D.R. Brothwell and E.S. Higgs eds. *Science in Archaeology: A Survey of Progress and Research* (2nd ed.). London. Pp. 283–302.

Sneh A., Bartov Y. and Rosensaft M. 1998. *Geological Map of Israel. Scale 1:200,000. Sheet 2.* Jerusalem.

Stark H. 1994. Ḥorvat 'Illin, South. *ESI* 12:80–82.

Vardi J. 2011. *Sickle Blades and Sickles of the Sixth and Fifth Millennia BCE in Light of the Finds from the Chalcolithic Sickle Blade Workshop Site of Beit Eshel*. Ph.D. diss. Ben-Gurion University of the Negev. Be'er Sheva' (Hebrew; English summary, pp. I–IX).

Vered A. Forthcoming. The Flint Assemblage from Bet Shemesh—The Baseball Field Site. *'Atiqot*.

Villa P. and Mahieu E. 1991. Breakage Patterns of Human Long Bones. *Journal of Human Evolution* 21:27–48.

Weksler-Bdolah S. 1998. Ḥorbat 'Illin (Upper). *ESI* 18:95–96.

Yannai E. 2006. *'En Esur ('Ein Asawir)* I: *Excavations at a Protohistoric Site in the Coastal Plain of Israel* (IAA Reports 31). Jerusalem.

Yannai E. and Marder O. 2000. Lod. *HA–ESI* 112:63*–65*.

Yekutieli Y. 2000. Early Bronze Age I Pottery in Southwestern Canaan. In G. Philip and D. Baird eds. *Ceramics and Change in the Early Bronze Age of the Southern Levant* (Levantine Archaeology 2). Sheffield. Pp. 129–152.

Yekutieli Y. 2002. The Ceramic Assemblage of Level C of the Early Bronze Age IB1 in Area DII at Tel Erani. In E.D. Oren and S. Ahituv. *Aharon Kempinski Memorial Volume: Studies in Archaeology and Related Disciplines* (Beer-Sheva XV). Be'er Sheva'. Pp. 59*–79* (Hebrew).

Yekutieli Y. and Gophna R. 1994. Excavations at an Early Bronze Age Site near Nizzanim. *Tel Aviv* 21:162–185.

Zeder M.A. 2006. Reconciling Rates of Long Bone Fusion and Tooth Eruption and Wear in Sheep (*Ovis*) and Goat (*Capra*). In D. Ruscillo ed. *Recent Advances in Ageing and Sexing Animal Bones (Proceedings of the 9th Conference of the International Council of Archaeozoology, Durham, August 2002)*. Oxford. Pp. 87–118.

Zeder M. and Lapham H.A. 2010. Assessing the Reliability of Criteria Used to Identify Postcranial Bones in Sheep, *Ovis*, and Goats, *Capra*. *JAS* 37:2887–2905.

Zilberbod I. 2007. Ḥorbat 'Illin (North) (A). *HA–ESI* 119 (October 18). http://www.hadashot-esi.org.il/report_detail_eng.aspx?id=597&mag_id=112 (accessed December 9, 2019).