'Atiqot 105, 2021

Pottery of the Persian, Hellenistic, Roman and Byzantine Periods at Kerem Maharal

Peter Gendelman and Kareem Sa'id

The excavations at Kerem Maharal (see 'Ad and Sa'id, this volume) exposed several occupation strata from the Persian to the end of the Byzantine periods (Strata XI–VII). The pottery finds are described below chronologically and typologically.

Strata XI–X: The Persian–Hellenistic Periods

Most of the Persian-period pottery was found in Area C, where several floors, with earth deposits above (L314, L319, L320, L326, L336, L337)[1] and below (L328) them, yielded a considerable quantity of pottery dating to the sixth–fourth centuries BCE. Also included are several fragments that originated in mixed loci (L302, L305, L307, L312, L315, L317, L321, L323, L325, L334) that were dated to the Persian period based on parallels from published sites.

Fine Table Ware

The fine table ware assemblage contained both imports and local imitations.

Attic Imports (Fig. 1:1, 2).— A fragment of an Attic lekythos (Fig. 1:1), with a knob base and a high-quality black gloss, dates to the fifth–fourth centuries BCE. Similar vessels were discovered at sites such as Tel Mikhal (Marchese 1989:147, Fig. 10.2:16, 17), Tel Mevorakh (Johnson 1978:40, Pl. 29:9) and Tell el-Ḥesi (Risser and Blakely 1989:106, Figs. 70:72, 107).

The base fragment of a footed bowl (Fig. 1:2) has a reserved and grooved resting surface; it is made of the characteristic fabric and gloss of Attic vessels. Due to its fragmentary state, it is hard to identify the shape of the vessel, although it may well be a hemispherical

[1] Please note: Loci numbers of fills above floors received the same number as the floor; however, the floor is denoted by the letter F. For a list of all loci according to excavation areas, see 'Ad and Sa'id, this volume: Appendix 1.

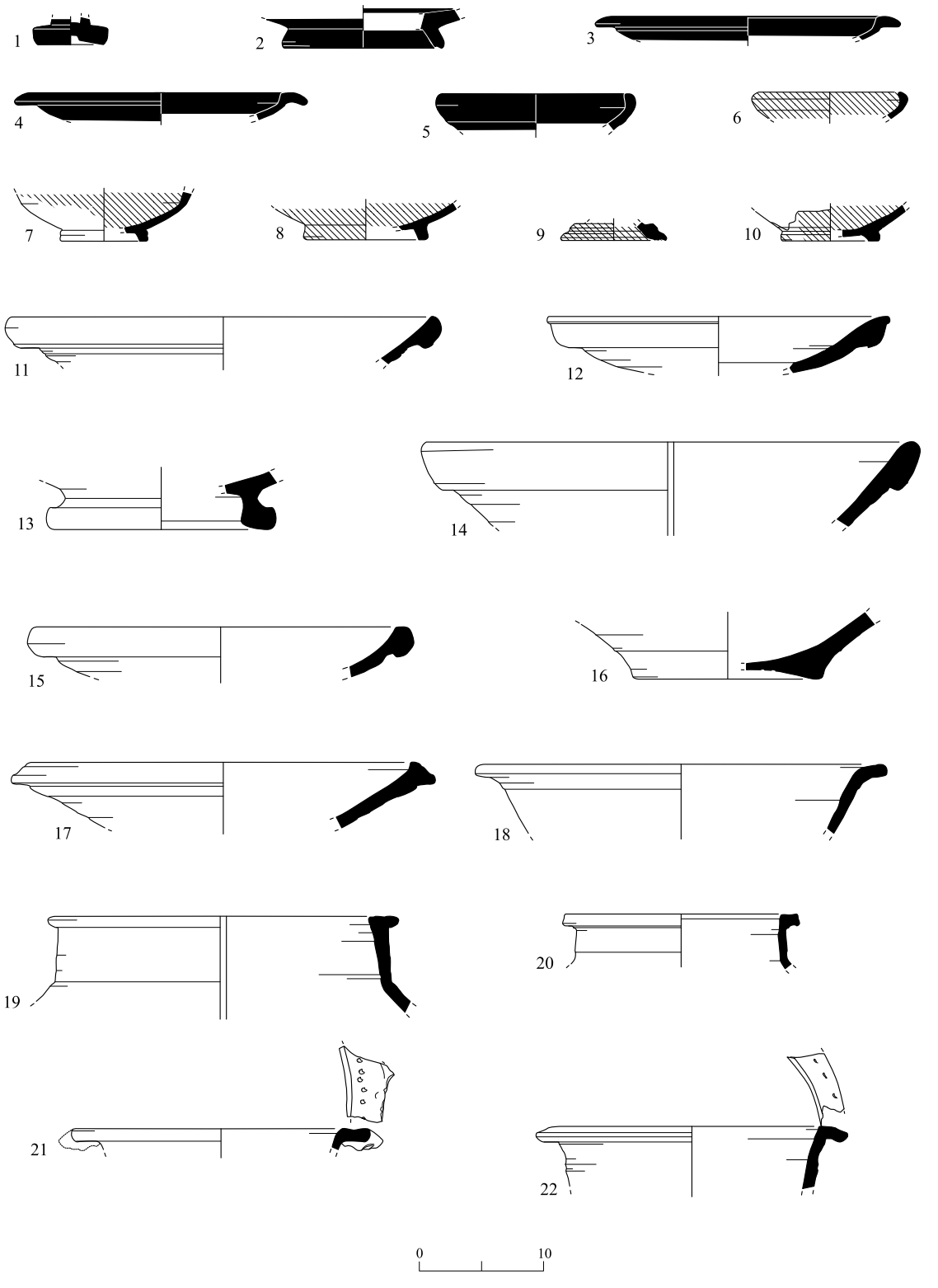

Fig. 1. Persian and Hellenistic pottery: fine table ware (1–10) and household vessels (11–22).

◂ **Fig. 1**

No.	Vessels	Locus	Basket No.	Description
1	Lekithos	305	3018/1	Pink fabric; black gloss
2	Bowl	303	3004/8	Pink fabric; black gloss
3	Fish plate	306	3008/1	Brown fabric; dark gray slip
4	Fish plate	303	3017/1	Light gray fabric; dark gray slip
5	Bowl	301	3060/12	Light gray fabric; dark gray slip
6	Bowl	334	3059/2	Brown fabric; dark gray to light red slip
7	Bowl	321	3044/4	Reddish yellow with white grits fabric; dark brown to red slip
8	Bowl	320	3038/15	Reddish brown fabric; dark gray to light red slip
9	Skiphos	301	3007/44	Reddish yellow fabric; dark brown to light red slip
10	Bowl	257	2516/11	Yellowish red fabric; sandy; red slip, worn
11	Mortarium	336	3064/1	Yellowish gritty fabric
12	Mortarium	336	3064/4	Yellowish gritty fabric
13	Mortarium	257	2515/1	Yellowish gritty fabric
14	Mortarium	320	3044/3	Pink gritty fabric; whitish coating
15	Mortarium	312	3068/1	Dark brown gritty fabric; pink coating
16	Mortarium	326	3045	Brown gritty fabric with minerals
17	Mortarium	317	3034/1	Brown gritty fabric
18	Mortarium	305	3006/8	Reddish yellow gritty fabric
19	Krater	336	3064/3	Gray coarse fabric; pink coating
20	Krater	336	3037/2, 4	Light gray coarse fabric
21	Krater	302	3027/17	Red coarse fabric; pink coating
22	Krater	307	3027/1	Yellowish red coarse fabric

bowl. Such bowls were produced in Athenian workshops in the early–mid-fourth century BCE (Thompson 1934:435, Figs. 4:A20; 117:A20; Sparkes and Talcott 1970:131–132, Fig. 8:825–842).

Regional Imports (Fig. 1:3–9).— Regional imports consist of a group of fine-ware bowls made of hard brownish fabric, covered with mottled slip varying from dark gray to dark red. The following types are included in the group: fish plates, hemispherical Echinus bowls and a high-footed skyphos.

Fish plates with a wide, down-curved rim (Fig. 1:3, 4) are a common type in Israel, dating from the third to the first centuries BCE (Kenyon 1957:260–263, Fig. 54:7, 9–12; Guz-Zilberstein 1995:292, Type BL 4d, Fig. 6.3:22–27). Hemispherical Echinus bowls (Fig. 1:5–8) are a widespread type, dating from the fifth century BCE (Tal 1999:123, 153–154, Figs. 4.21:3; 4.35:2–4) and throughout the Hellenistic period (Kenyon 1957:248–251, Fig. 49:7–13; Guz-Zilberstein 1995:292–293, Fig. 6.1:1–24). Echinus bowls are rather common at Kerem Maharal. The base fragment of a high-footed skyphos (Fig. 1:9) resembles a Pergamene vessel from Apollonia-Arsuf (Fischer and Tal 1999:236, Fig. 11:4).

Local Bowls (Fig. 1:10).— Local imitations of Echinus bowls with a distinct soft fabric and a thin red wash appear as early as the mid-fifth century BCE (Tal 1999:123, Fig. 4.21:8) and remain in use throughout the Hellenistic period.

Household Vessels

Mortaria and Heavy Bowls (Fig. 1:11–18).— Persian bowls, or Levantine mortaria (Bennett and Blakely 1989:196–201), are common in the Persian period. The common type has a trumpet base, flaring walls and a thickened folded rim (Fig. 1:11–13). A Cypriot/Aegean origin was suggested for these vessels (Tal 1999:97–98), which date to the sixth–fourth centuries BCE (Porath 1974:46, Fig. 4:1, 2; Stern 1982:98–101, Fig. 121; 1995:53–55, Fig. 2.2:1–5; Singer-Avitz 1989:116, 119–120, 124, 139, Figs. 9.1:1, 16; 9.2:2; 9.7:1, 2; 9.8:2; 9.13:1, 2; Berlin 1997:124–127, Pl. 38:341–347; Kapitaikin 2006:23–27, Fig. 2:1–9; Segal, Kletter and Ziffer 2006:6*, Fig. 7:4–12). Although usually dated within the Persian period, the evidence from Tel Kisan (Briend and Humbert 1980:108, Pl. 12:1–3), Tell el-Ḥesi (Bennett and Blakely 1989:196–203, Fig. 164:b) and Tel Dor (Guz-Zilberstein 1995:295, Fig. 6.9:1–7) suggests that the import of Levantine mortaria continued until the mid-third century BCE. Alongside the imports, local imitations made of hard pink ware (Fig. 1:14) were also found.

Two other types of mortaria were found: flat-based mortaria (Fig. 1:15, 16) and mortaria with flaring walls and a triangular rim (Fig. 1:17). Vessels similar to Nos. 15 and 16 were reported from Cyprus, where they were dated from the late eighth/early seventh to the sixth century BCE, or slightly later (Gjerstad 1948:88, Fig. LVI:5). Locally produced parallels are known throughout the Persian period, for example, at Dor (Stern 1995:53–55, Fig. 2.2:11, 12), Tel Kisan (Nodet 1980:122, Pl. 20:20), Ḥorbat 'Eleq (Silberstein 2000:441, Pl. XI:1) and Tell el-Ḥesi (Bennett and Blakely 1989:196–203, Fig. 164:a).

Mortaria, or heavy bowls, with flaring walls and a triangular rim similar to that of No. 17, were found in Tel Kisan Stratum 4 (seventh–early sixth centuries BCE; Salles 1980:147–148, Pl. 31:1).

Grouped with the mortaria is also a local type of heavy bowls with flaring walls (Fig. 1:18)—an imitation of Persian-period vessels that were produced in Cyprus (sixth century BCE; Salles 1983:74–75, Fig. 28:247, Type 2-2). Such bowls were reported from deposits that date to the Persian period at Dor (Stern 1995:53–55, Fig. 2.2:13), Tel Kisan (Nodet 1980:122, Pl. 20:16), Tel Mevorakh (Stern 1978:31, Fig. 4:21), Apollonia-Arsuf (Tal 1999:98–99, Fig. 4.11:19; 4.35:20) and Tel Mikhal (Singer-Avitz 1989:130, Fig. 9.9:1; Kapitaikin 2006:26–27, Fig. 3:17–21).

Kraters (Figs. 1:19–22; 2:1–3).— The Persian and Hellenistic strata at Kerem Maharal yielded several shapes of local kraters. The most common one is a footed krater characterized by a wide shoulder, cylindrical neck and ledge rim (Fig. 1:19, 20). The type persisted from the sixth to the second century BCE at Dor (Guz-Zilberstein 1995:297, Fig. 6.14:10, 11; Stern

1995: Fig. 2.3:1), Tel Kisan (Briend and Humbert 1980:108, Pl. 12:10), Samaria-Sebaste (Kenyon 1957:234, Fig. 43:10) and Maresha (Levine 2003:91, Fig. 6.5:63). Examples of this form at Kerem Maharal originated in Persian strata (L319, L336), and consequently a date in the sixth–fourth centuries BCE is proposed.

A type which seems to be related to the previous one, is represented by vessels with a ledge rim and a poinçon decoration (Fig. 1:21, 22). The poinçon decoration seems to be a local feature (see below, Fig. 2:1).

The small globular krater, with a flaring rim and oval handle with poinçon decoration (Fig. 2:1), is the only example of its type. It resembles a krater from Tel Kisan, which was dated to the Persian period (Nodet 1980:123–124, Fig. 33:1).

A globular krater with a cylindrical neck and a square rim (Fig. 2:2), made of coarse local clay, is related to a fourth–third-century BCE type from the excavations at Dor (Type KR 11a; Guz-Zilberstein 1995:297, Fig. 6.14:1); an example was also published from Ḥorbat ʻEleq (Silberstein 2000:438, Pl. VII:12).

The wide, open krater with a rounded rim (Fig. 2:3) resembles a vessel from Tell el-Ḥesi, which was dated to the Persian period (Bennett and Blakely 1989:178, Fig. 155:17).

Juglet and Jugs (Fig. 2:4–7).— The small pear-shaped juglet with a narrow neck, funnel rim and ring handle (Fig. 2:4) is similar to Stern's Perfume Juglet Type 3, dated to the fifth–fourth centuries BCE (Stern 1982:122, Fig. 186). It is a type commonly found in assemblages of the sixth–fourth centuries BCE, as for example at Dor (Stern 1995:65, Fig. 2.11:4), Shiqmona (Elgavish 1974: Pl. XL:57), Tell el-Ḥesi (Bennett and Blakely 1989:214, Fig. 175a) and Tel Mikhal (Singer-Avitz 1989:137, Fig. 9.15:9).

Two common types of household jugs were found: a pitcher with a flaring neck and a rod handle rising above the rim (Fig. 2:5), related to the Hellenistic-period Type JG4 from Dor (Guz-Zilberstein 1995:309, Fig. 6.31); and a bag-shaped jug with a cylindrical neck and a thickened flaring rim (Fig. 2:6, 7)—a common form of the fifth–second centuries BCE, also reported from Tel Kisan (Briend and Humbert 1980:106, Pl. 9:6), Dor (Type JG 11; Guz-Zilberstein 1995:308–309, Fig. 6.30:1–6), Apollonia-Arsuf (Tal 1999:100, Figs. 4.12:8, 4.38:1) and Ḥorbat ʻEleq (Silberstein 2000:426, Pl. III:1–5).

Cooking Ware

Cooking Pots (Fig. 2:8–10).— Two types of cooking pots were identified. The first is globular, with thick walls, a high neck and a flat or grooved rim (Fig. 2:8, 9). Similar vessels from Dor were dated to the fifth–fourth centuries BCE (Stern 1995:55, Fig. 2.4:5, 6). The second type, a cooking pot with a cylindrical neck and a triangular rim (Fig. 2:10), is a characteristic Hellenistic form, dated from the second half of the fourth to the late second century BCE (e.g., Kenyon 1957:228, Fig. 41:3–5; Briend and Humbert 1980:107, Pl. 11:1, 2; Guz-Zilberstein 1995:299, Fig. 6.18, Photo 6.15; Berlin 1997:90, Pl. 24:278, 279).

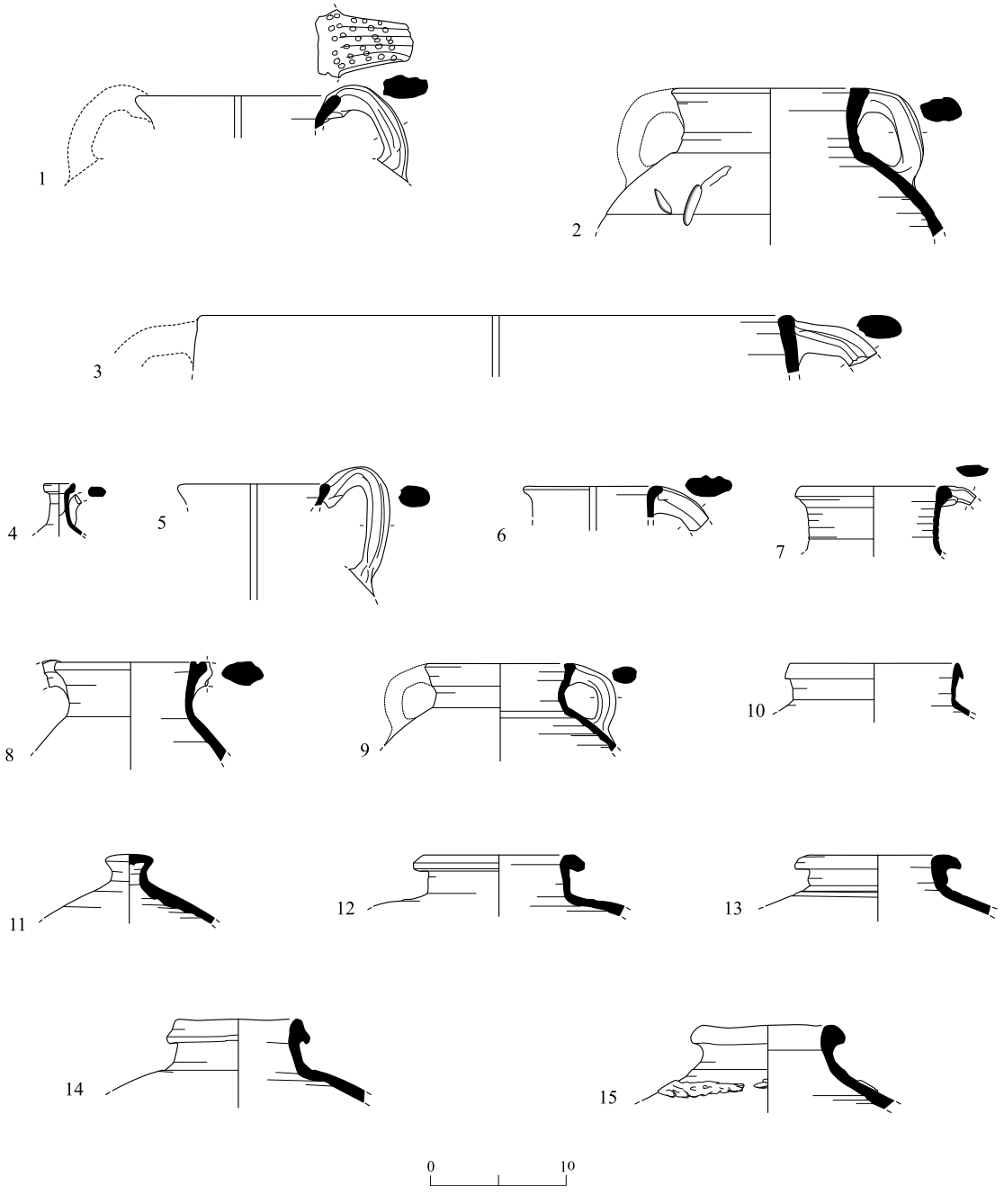

Fig. 2. Persian and Hellenistic pottery: houshold vessels (1–7), cooking ware (8–11) and storage jars (12–15).

Lid (Fig. 2:11).— Lids with a flat, hollow knob-handle are a common find in Late Persian and Hellenistic deposits in Israel, e.g., Shiqmona (Elgavish 1974:41, Pl. XXIX:277), Tel Kisan (Briend and Humbert 1980:108, Pls. 1:10,11; 17:19, 20) and Tel Dor (Persian strata—Stern 1995:55–58, Fig. 2.4:2; Hellenistic strata—Guz-Zilberstein 1995:302, Fig. 6.24:1–10).

◂ **Fig. 2**

No.	Vessel	Locus	Basket No.	Description
1	Jug/krater	320	3037/17	Red coarse fabric
2	Krater	319	3043/2, 4	Brown coarse fabric
3	Krater	328	3048	Brown coarse fabric; gray core
4	Juglet	317	3034/1	Pink fabric
5	Jug	303	3004/9	Reddish yellow gritty fabric
6	Jug	275	2540	Brown gritty fabric
7	Jug	336	3064/2	Yellowish gritty fabric
8	Cooking pot	319	3037/5, 7	Brown coarse fabric with quartz
9	Cooking pot	320	3044/1	Red coarse fabric with lime; gray core
10	Lid	325	3042/5	Red coarse fabric
11	Storage jar	319	3036	Brown coarse fabric; pink coating
12	Storage jar	336	3064/9	Brown coarse fabric; pink coating
13	Storage jar	320	3044/5	Brown coarse fabric; red core; pink coating
14	Storage jar	303	3025/7	Red coarse fabric; pink coating

Storage Jars and Amphorae

Storage jars and amphorae are represented by several types, distinguished by their shape and provenance. Several amphorae belong to types which are associated with the Phoenician tradition, although they are made of local clay.

Local Storage Jars (Figs. 2:12–15).— The local storage jars have a collared rim, a large bag-shaped body and loop handles attached to the upper body. Two variants were identified: one has a hooked rim (Fig. 2:12–14)—similar vessels were dated at Dor to the Persian–early Hellenistic periods (Type JR 1b, fifth–third centuries BCE; Guz-Zilberstein 1995:311, Fig. 6.36:5–9); and the other is characterized by a conical shoulder and a thick rounded rim (Fig. 2:15)—similar vessels from the Persian period are known from Tel Mevorakh (Stern 1978:34, Fig. 7:3), Tel Mikhal (Type 2, c. 525–450 BCE; Singer-Avitz 1989:119, 122, Figs. 9.1:22; 9.3:2–6), Apollonia-Arsuf (sixth–fourth centuries BCE; Tal 1999:102, Fig. 4.13:10; 4.39:14, 15) and Ḥorbat ʻEleq (fourth–second centuries BCE; Silberstein 2000:420, Pl. I:2).

Torpedo-Shaped Jar (Fig. 3:1).— This fragment, with a short neck and a hooked rim, seems to belong to a Torpedo jar, dated at Dor to the fifth–beginning of the fourth centuries BCE (Stern 1995:62, Fig. 2.9:1, 2). The type was reported from sites along the Mediterranean coast, dating from the sixth to the late fourth century BCE. Two variants are known: one with one handle (Stern 1978:34, Fig. 7:5), and the other with two handles (Guz-Zilberstein 1995:311–312, Fig. 6.35:10, Pl. 6.37a, b).

Phoenician Carinated-Shoulder Amphora (Fig. 3:2).— This long-enduring type, dated to the eighth–fourth centuries BCE (Briend and Humbert 1980:105, Pl. 7:2–5; Guz-Zilberstein

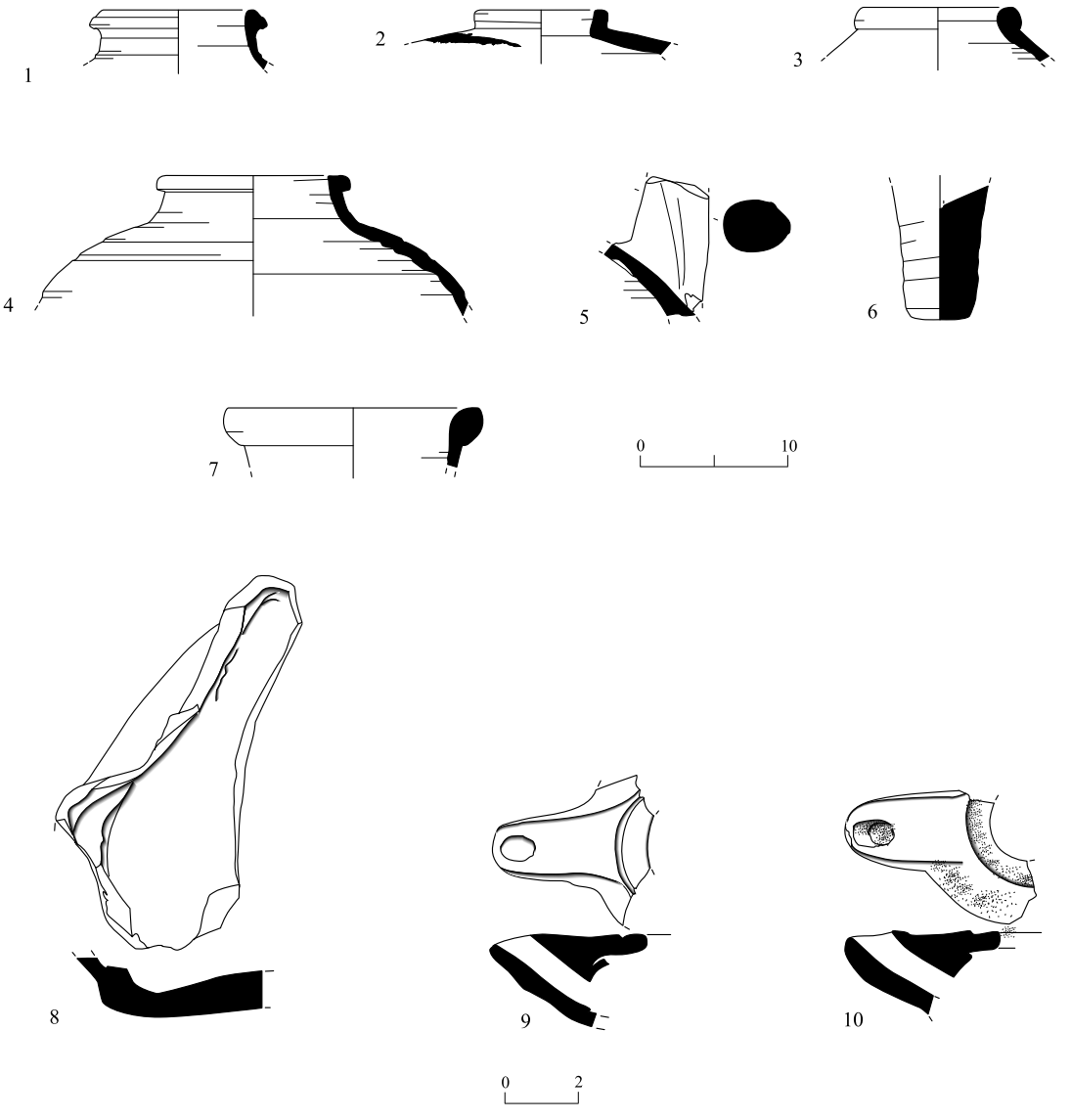

Fig. 3. Persian and Hellenistic pottery: Storage jar (1), amphorae (2–7) and oil lamps (8–10).

No.	Vessel	Locus	Basket No.	Description
1	Storage jar	337	3065/6	Red coarse fabric; pink coating
2	Amphora	325	3042/2	Dark brown coarse fabric; gray painting on shoulder
3	Amphora	306	3008/3	Red coarse fabric; gray core
4	Amphora	328	3048	Red coarse fabric; pink coating
5	Amphora	314	3029	Red to brown coarse fabric
6	Amphora	328	3048	Red coarse fabric; pink coating
7	Amphora	320	3044/2	Brown micaceous fabric
8	Oil lamp	326	3047/3	Pink fabric
9	Oil lamp	303	3017/2	Pink fabric
10	Oil lamp	315	3022/15	Pink fabric

1995:312, Fig. 6.38:2, 3, 6; Stern 1995:58–62, Figs. 2.7, 8; 2.8:8–16; Tal 1999:104, Fig. 4.13:19–24), is rare in the Persian strata at Kerem Maharal.

Bag-Shaped Holemouth Amphorae (Fig. 3:3).— Bag-shaped holemouth amphorae, with a heavy rolled rim, wre the dominant type toward the second century BCE, when the carinated shoulder gradually disappeared. They are common in sites in South Phoenicia and along the northern coast of Israel, e.g., at Shiqmona (Elgavish 1974:56, Pls. X:211; XVII:235; XXIII:251, 252), Tel Kisan (Briend and Humbert 1980:105, Pl. 7:8), Dor (Guz-Zilberstein 1995:312, Fig. 6.38) and Tyre (Bikai, Fulco and Marchard 1996: Fig. 87:1, 3, 4).

Basket-Handle Amphorae (Fig. 3:4–6).— Fragments of basket-handle amphorae, with rounded shoulders, a short neck and a flat rim, are common at Kerem Maharal. This type was widespread along the coasts of Syria, Lebanon, Israel, the Sinai Peninsula, Egypt, Cyprus and Rhodes in the seventh–fourth centuries BCE (Stern 1982:110–111; Singer-Avitz 1989:116–118). Similarly shaped vessels, dated to the late fifth–fourth centuries BCE, are known from Dor (Stern 1995:62–63, Fig. 2.10:10–13) and Apollonia-Arsuf (Tal 1999:126–127, Fig. 4.24:8, 9). The fabric of the basket-handle amphorae from Kerem Maharal is not dissimilar to local types of clay, suggesting a possible production in the Carmel region.[2]

Samian Amphora (Fig. 3:7).— A single fragment of an imported amphora with a high, slightly flaring neck and a thickened folded rim, is made of brownish micaceous clay. It is similar to the early fifth-century BCE variant of Samian amphorae (Grace 1971:77, Fig. 3:1, 3; Monakhov 1999:97–101, 112–113, Figs. 28:1; 29:1; 36:1), commonly found at Persian-period sites in Israel (Stern 1982:112–114, Fig. 160 left; Stern 1995: Fig. 2.16:27; Tal 1999:104, Fig. 4.13:26, 27).

Oil Lamps (Fig. 3:8–10).— Two types of oil lamps were found. One is an open form, with a wide rim and a knife-shaved surface (Fig. 3:8)—a common type that dates from the seventh–early sixth centuries BCE (Salles 1980:150, Pl. 32:8, 9) and throughout the entire Persian period (Nodet 1980:123, Pl. 21:1–5; Stern 1995: Fig. 2.14; Tal 1999:105, Figs. 4.13:32; 4.41:13, 14). The other is wheel-made, with an elongated nozzle (Fig. 3:9, 10)—a common local imitation of an Attic prototype, dating to the late Persian and Hellenistic periods (fourth–second centuries BCE; Briend and Humbert 1980:110, Pl. 14:1–3; Rosenthal-Heginbottom 1995: Figs. 5.13:9, 10; 5.14:1–8; Tal 1999:161, Fig. 4.41:15, 16).

---

[2] The production of such amphorae in the Shephelah and the northern coast of Israel was previously suggested by Gorzalczany (1999:185–189, Table 4.10). One of the fragments discussed here (Fig. 3:6) was submitted for petrographic analysis by A. Cohen-Weinberger, and the mineral composition was found to be similar to that of amphorae of the Carmel coast.

STRATUM IX: THE ROMAN PERIOD

The Roman-period pottery assemblage from Kerem Maharal originated in the remains of a structure and related fills in Area H. A small quantity of pottery from this period was also found in disturbed fills in Areas C, I and F16. The Roman-period assemblage is quite homogeneous and consists of pottery that provides evidence of a short occupation period, from the late first to the early second century CE.

Fine Table Ware

Eastern Terra Sigillata A (ETS-A; Fig. 4:1).— This fragment of a carinated footed plate has parallels in Atlante ETS-A Form 37A, dated 60–100 CE (Hayes 1985:31, Table V:12), and Crowfoot Form 14a (Kenyon 1957:312–313, 331, Figs. 68:6; 79:16).

Cypriot Terra Sigillata (CTS; Fig. 4:2).— A fragment of a rounded bowl with a thick rolled rim, is made of characteristic CTS fabric. It belongs to Atlante CTS Form P11, which dates from the mid-first to the mid-second century CE (Hayes 1985:83, Pl. XIX:2, 3).

Household Vessels

Jug (Fig. 4:3).— This group is represented by a fragment of a jug with a cylindrical neck and a slightly flaring rim with a deep inner gutter. It is a common type of local jug, produced in the Sharon plain and the Carmel region during the second or third century CE (Kletter and Rapuano 1998:52, Fig. 4:9, 10; Gal and Muqari 2002:102, Fig. 10:3; Gendelman 2010:114*, Fig. 9:14, 15; 2012:35*, Fig. 2:1).

Cooking Ware

Three types of cooking pots and one type each of casseroles and cooking bowls were identified.

Cooking Pots (Fig. 4:4–7).— Figure 4:4 is a globular pot, with a wide flaring neck and an out-turned rim with two deep grooves on top. It is similar to Kefar Ḥananya Form 4B, dated from the mid-first to the mid-second century CE (Adan-Bayewitz 1993:125–128, 177, Pls. 4B:3; G4B:1, 2). This type is widely distributed at sites in the Galilee and the Carmel regions (Loffreda 1974:32, Fig. 3:1, Photo 3:1; Johnson 1988:195–197, Fig. 7-40:601–603; Guz-Zilberstein 1995:322, 324, Fig. 6.49:15, 16).

Figure 4:5, 6 are globular cooking pots with a cylindrical neck and a rounded rim. The shape is common from the first to the beginning of the second century CE (Loffreda 1996:73, Fig. 28:5–8). Such pots are common at Caesarea and its vicinity (Blakely 1992:37, Fig. 18:2–6; Calderon 2000:93–95, Pl. II:39, 40; Silberstein 2000:431, Pls. V:4, 6; XIX:2) and at Shekhem/Neapolis (Sarig 2009:7, Pls. 2:9–13; 5:5; 6:7, 8)

A neck-less cooking pot, with a flaring rim and a groove to accommodate a lid (Fig. 4:7), is similar to vessels from the second–fourth-century CE deposits at Shekhem/Neapolis (Sarig 2009:5, Pl. 26:9) and from Ḥorbat Sumaq (Siegelman 1998:324, Fig. 8:11)

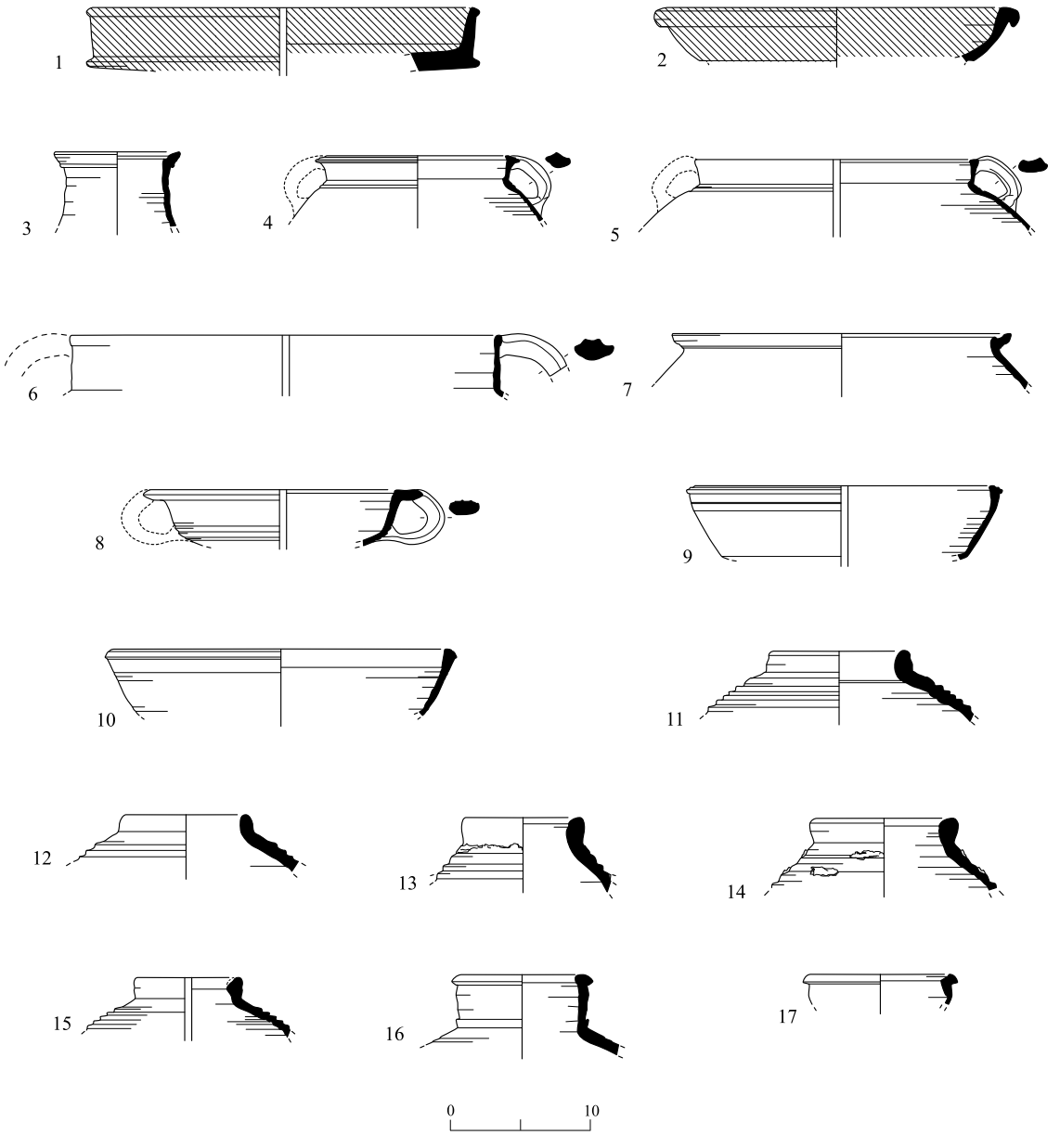

Fig. 4. Roman pottery: Fine table ware (1, 2), household vessel (3), cooking ware (4–10) and amphorae and storage jars (11–17).

Casserole (Fig. 4:8).— Such shallow rounded casseroles with a ledge rim are a common Galilean type, comparable with Loffreda's Form A16 (1974:40–42) and Kefar Ḥananya Form 3B, dated from the early second to the late fourth century CE (Adan-Bayewitz 1993:119–124, Pl. 1A). Similar vessels are known from second–third-century CE deposits at Shekhem/Neapolis (Sarig 2009:5, Pls. 2:6; 6:3, 4; 35:2–4).

◂ **Fig. 4**

No.	Vessel	Locus	Basket No.	Description
1	Plate ETS-A	463	4523/6	Pink fabric; red slip
2	Bowl CTS	463	4523/1	Red fabric; thin red slip
3	Jug	463	4523/3	Red coarse fabric
4	Cooking pot	467	4829/2	Red hard fabric; blackened ext.
5	Cooking pot	463	4523/2	Red hard fabric
6	Cooking pot	257	2515/5	Red hard fabric
7	Cooking pot	1602	16001	Red hard fabric
8	Casserole	460	4515/1	Red coarse fabric
9	Cooking bowl	462	4522/4	Red hard fabric
10	Cooking bowl	463	4523/9	Red hard fabric; blackened ext.
11	Amphora	467	4529/3	Reddish yellow gritty fabric
12	Amphora	467	4529/5	Reddish yellow gritty fabric
13	Amphora	467	4529/7	Brown coarse fabric
14	Amphora	330	3077/2, 5	Brown coarse fabric
15	Amphora	335	3060/18	Reddish yellow gritty fabric
16	Storage jar	463	4523/5	Reddish yellow gritty fabric
17	Storage jar	2013	20014	Red hard gritty fabric

Cooking Bowl (Fig. 4:9, 10).— This open cooking bowl, with a thickened and grooved rim, is of the type known as Galilean Bowls. It is similar to Loffreda's Form A11 (1974:36–38, Fig. 5:1–9) and Kefar Ḥananya Form 1A, dated from the late first to the late third century CE (Adan-Bayewitz 1993:88–91, Pl. 1A).

Amphorae and Storage Jars

Bag-Shaped Holemouth Amphorae (Fig. 4:11–15).— The most common type of storage vessel is the bag-shaped holemouth amphora with thick, wheel-ridged walls and a square thick rim. It is the local container in the Carmel and Lower Galilee regions, dating between the mid-first and the early second centuries CE. Such vessels were reported from Ḥorbat ‘Aqav and Ḥorbat ‘Eleq, where they were mistakenly identified as early Gaza jars (Calderon 2000:93, Pl. I:20–22; Silberstein 2000:425, Pl. II:13, 14).

Bag-Shaped Jar with Collared Rim (Fig. 4:16).— This standard type of bag-shaped jar is rather rare at Kerem Maharal. The rim profile clearly indicates a first–early second-century CE date. Such vessels are common at Caesarea (Blakely 1988:89–90), Ḥorbat ‘Aqav and Ḥorbat ‘Eleq (Calderon 2000: Pl. I:1, 2; Silberstein 2000: Pl. I:16, 17) and at Ḥorbat Biẓ‘a (Gendelman 2012:34, Fig. 1:6–8).

Galilean Bag-Shaped Jar (Fig. 4:17).— This jar type, with a collared flaring rim, is similar to Loffreda's Form A11 (1974:36–38, Fig. 5:1–9). Such vessels were found at Ḥorbat 'Aqav (Calderon 2000: Pl. I:8).

Strata VIII–VII: The Byzantine Period

Byzantine-period pottery was discovered in all the excavation areas at Kerem Maharal. In Areas B, D and G, several loci of stratigraphic importance yielded a large quantity of pottery from this period. It is noteworthy that types that could be dated to the early part of the Byzantine period (fourth–fifth centuries CE) are nearly absent from the assemblage, and most of the finds date to the sixth–seventh centuries CE (see also Katsnelson, this volume).

Fine Table Wares

The repertoire of fine table wares from the Byzantine strata at Kerem Maharal is typical of the region, e.g., at Jalame (Johnson 1988), Ḥorbat Sumaq (Siegelmann 1998), Ḥorbat 'Aqav (Calderon 2000) and Ḥorbat Raqit (Vincenz 2004). The majority belongs to well-known groups from Cyprus, Asia Minor and North Africa.

Cypriot Red Slip Ware (CRSW) Bowls (Fig. 5:1–9).— Bowls of this type are the most common at the site, and include several subtypes. A bowl with flaring walls and a rolled rim (Fig. 5:1) is similar to Hayes' Form 2, dated to the late fifth–mid-sixth centuries CE (1972:373–376, Fig. 80:9–14). The deep bowl with a flat grooved rim (Fig. 5:2) is similar to Hayes' Form 7, dated to the sixth century CE (1972:377–379, Fig. 81). Bowl No. 3, with flaring walls and a ledge rim (Fig. 5:3), is related to Hayes' Form 8, of the fifth–sixth centuries CE (1972:379, Fig. 81). Bowl Nos. 4–6, with flaring walls and a triangular rim, are similar to Hayes' Form 9, dated to the sixth–seventh centuries CE (1972:379–382, Figs. 81; 82). The large carinated bowl (Fig. 5:7), with a triangular grooved rim, is comparable to Hayes' Form 10, dated to the sixth–seventh centuries CE (1972:382–383, Fig. 82). Deep flaring bowl/basin No. 8, with a folded rim, is similar to Hayes' Form 11, dated to the sixth–seventh centuries CE (1972:383, Fig. 84); bowl No. 9, with flaring walls and a flattened rim, is made of a soft fabric and therefore, seems to be a (local?) imitation of Hayes' Form 11 (see Fig. 5:8).

Phocaean Red Slip Ware (PRSW; previously, LRCW) Bowls (Fig. 5:10–15).— This ware is less common at Kerem Maharal, appearing in only two forms. The more common form is that of the bowls with flaring walls, Hayes' Form 3, including two variants: one (Hayes' Form 3C) with a rounded flanged rim (Fig. 5:10), dated to the fifth century CE (Hayes 1972:329–338, Fig. 67:7); and the other (Hayes' Form 3F), with a square flanged rim (Fig. 5:11–13), dated to the sixth century CE (Hayes 1972:329–338, Fig. 69:19–25). Another

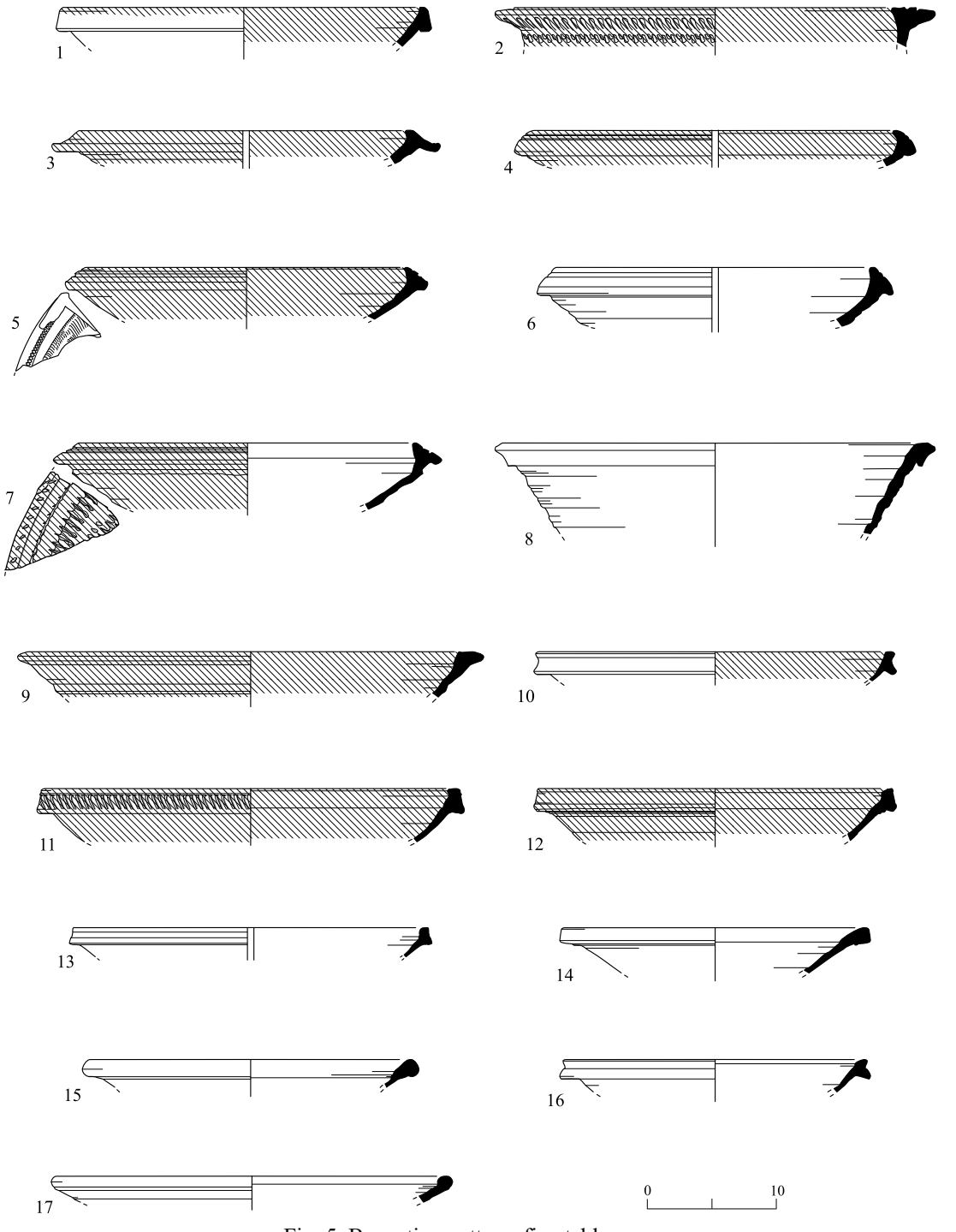

Fig. 5. Byzantine pottery: fine table ware.

◂ **Fig. 5**

No.	Vessel	Locus	Basket No.	Description
1	Bowl CRSW	518	5044/1	Light red fabric; red to yellowish slip
2	Bowl CRSW	301	3007/26	Light red fabric; reddish brown slip
3	Bowl CRSW	157	1521/4	Light red fabric; worn red slip
4	Bowl CRSW	158	1522/2	Light red fabric; worn reddish brown slip
5	Bowl CRSW	333	3054/1	Light red fabric; reddish brown slip
6	Bowl CRSW	1829	18016	Light red fabric; worn reddish brown slip
7	Bowl CRSW	214	2057/1	Light red fabric; worn reddish brown slip
8	Bowl CRSW	155	1516/1	Light red fabric; worn reddish brown slip
9	Bowl CRSW?	180	1829/6	Reddish yellow fabric; worn red slip
10	Bowl PRSW	2020	20017	Light red gritty fabric; red slip
11	Bowl PRSW	300	3000/2	Light red gritty fabric; red slip
12	Bowl PRSW	214	2057/10	Light red gritty fabric; red slip
13	Bowl PRSW	218	2060/2	Light red gritty fabric; red slip
14	Bowl PRSW	259	2514/1	Light red gritty fabric; red slip
15	Bowl PRSW	515	3094/4	Light red gritty fabric; red slip
16	Bowl PRSW?	2020	20017	Reddish yellow fabric; worn reddish brown slip
17	Bowl ARSW	214	2057/5	Red gritty fabric; red slip

bowl form is similar to Hayes' Form 10C, with flaring walls and a thickened square rim (Fig. 5:14, 15), which dates to the seventh century CE (Hayes 1972:343–346, Fig. 71:11–14).

Phocaean Red Slip Ware Imitation Bowl (Fig. 5:16).— This bowl is similar in shape to Hayes' Form 3 (see Fig. 5:10–13), but it is made of local yellowish fabric. Such imitations of PRSW are known from Ḥorbat Raqit, where they were dated to the sixth century CE (Vincenz 2004:213, Fig. 1:3).

African Red Slip Ware (ARSW; Fig. 5:17).— One fragment belongs to an ARSW bowl with flaring walls and a folded rim. It is similar to Hayes' Form 104, dated to the sixth–seventh centuries CE (Hayes 1972:160–166, Fig. 30:23–30).

Household Vessels

Basin (Fig. 6:1).— This deep basin, with a thick rounded rim and combed decoration, is common in deposits of the late Byzantine and Abbasid periods (sixth–eleventh centuries CE; Brosh 1986: Fig. 4:18, 19; Boas 1992:159, Fig. 73:11; Avissar 1996:126–127, Fig. XIII:79–81; Stacey 2004:101, Fig. 5.15:5–7).

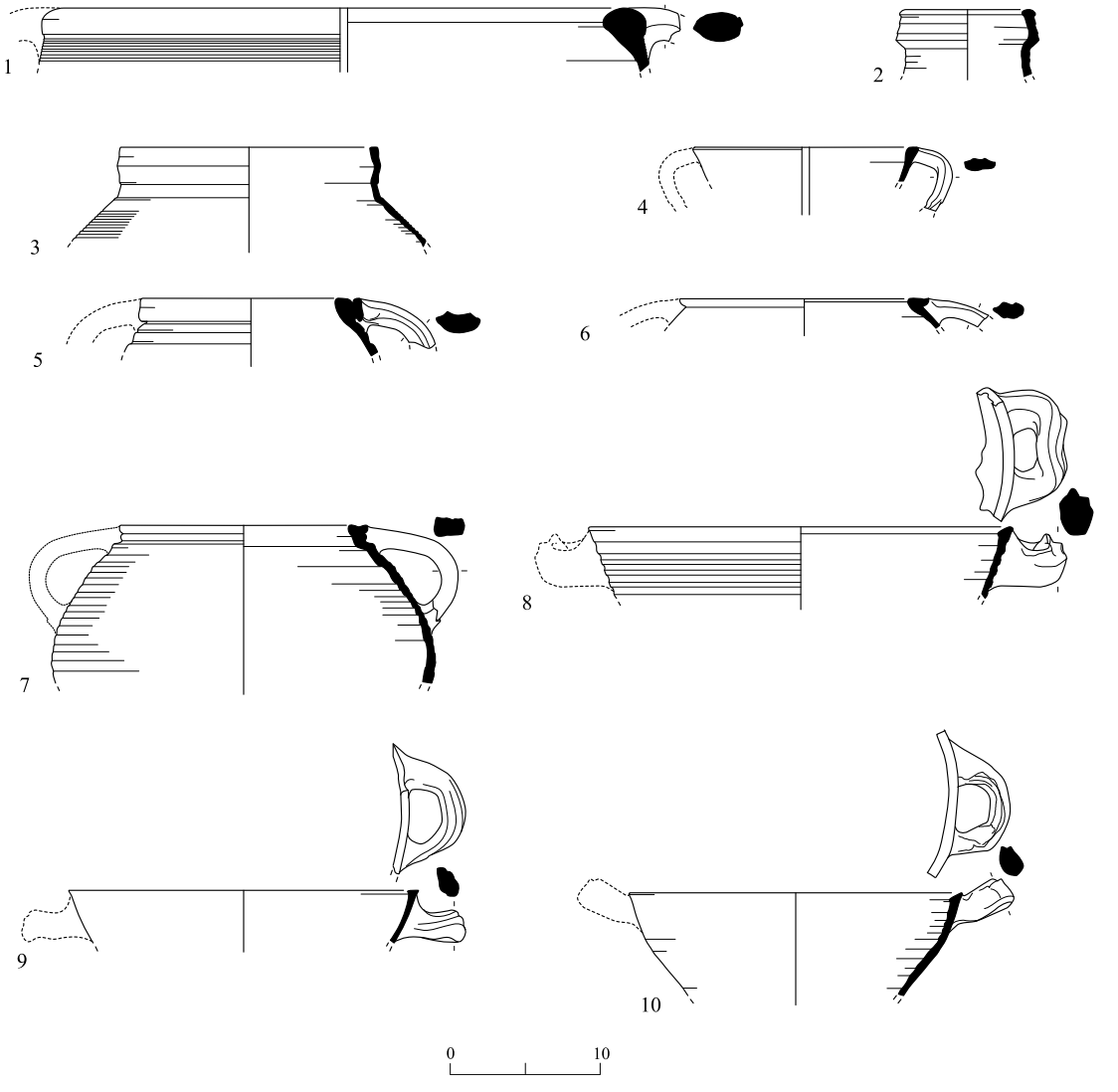

Fig. 6. Byzantine pottery.

No.	Vessel	Locus	Basket No.	Description
1	Basin	301	3002/2	Red coarse fabric; pinkish coating
2	Antilia jar	509	5024/1	Reddish yellow gritty fabric
3	Cooking pot	311	3021/2	Reddish brown hard fabric; blackened ext.
4	Cooking pot	510	5040/1	Red hard fabric; blackened ext.
5	Cooking pot	102	1107/1	Reddish yellow gritty fabric
6	Cooking pot	300	3000/1	Reddish yellow gritty fabric
7	Cooking pot	155	1516/9	Reddish brown gritty fabric; blackened ext.
8	Casserole	215	2049	Reddish brown gritty fabric
9	Casserole	515	5039/5	Reddish brown gritty fabric; blackened ext.
10	Casserole	157	1524/13	Reddish brown gritty fabric

Antilia Jar (Fig. 6:2).— A fragment of an antilia jar, with a rounded cup-shaped rim, resembles Ayalon's Form 3 (fifth–seventh centuries CE; cf. Ayalon 2000:216–226, Fig. 3:4).

Cooking Ware

Three types of cooking pots and one type of casserole were identified.

Cooking Pots (Fig. 6:3–7).— Squat cooking pots with a concave neck and a rounded rim (Fig. 6:3) are thought to be imports from Cyprus, where similar pots were found also in kilns (Catling 1972:85, Fig. 7:P96). In Israel, such vessels are frequently found in seventh-century CE deposits in coastal cities, such as Caesarea (Adan-Bayewitz 1986:108, Fig. 4:3, 4; Magness 1992:132, 153, Fig. 69:6; Oleson et al. 1994:38, Fig. 8:K22), Ḥorbat Qasṭra (Siegelmann 1996:81, Figs. 10:9; 13:9) and Ashqelon (Nahshoni 1999:103, Fig. 5:12).

Globular pots, with a slightly flaring neck and a rounded rim (Fig. 6:4), are roughly dated to the early second–late fourth or early fifth centuries CE, and are known from Caesarea (Riley 1975:48, Fig. on p. 49: Nos. 109, 110; Tomber 1999:300, 309, Fig. 2:47), Jalame (Johnson 1988:198, Fig. 7-41:607), Ḥorbat Raqit (Vincenz 2004:226, Fig. 6:21, 22) and Shekhem/Neapolis (Sarig 2009:7, Pl. 21:3).

The common Byzantine squat, neck-less cooking pot is present in several rim variants at the site. One is a cooking pot with a wide, out-turned and concave rim (Fig. 6:5), which seems to be similar to Johnson's undated Form 10 Variant 2 (Johnson 1988:195, Fig. 7-39:587–590). Similar vessels were found at Ḥorbat Qasṭra (Siegelman 1996:81, Fig. 10:13) and Ḥorbat Raqit (Vincenz 2004:226, Fig. 5:2–6). There is no firm date for this form yet, but the fourth–fifth centuries CE seem to be appropriate. Another variant is characterized by a thick folded rim with a groove along the top (Fig. 6:6). A similar vessel was found in a deposit dating to the sixth–seventh centuries CE at Ḥorbat ʻAqav (Calderon 2000:140, Pl. XXII:45). A third variant is a cooking pot with a folded rim grooved on the outside (Fig. 6:7). This is a common Byzantine-period form (fifth–seventh centuries CE) along the Israel northern coast, Mount Carmel and Galilee (Johnson 1988:192, Fig. 7-38:566; Magness 1992:143, Fig. 62:8; Avissar 1996:73, Fig. XII.6:8; Tomber 1999:309, Fig. 7.113; Calderon 2000:108, 138, Pls. VII:31; XXII:33–35).

Casserole (Fig. 6:8–10).— The only type of casserole from the Byzantine strata at Kerem Maharal has an open shape, beveled-cut rim and opposing, double twisted handles. Such vessels are common throughout Israel, and generally date from the fourth to the eighth century CE (Adan-Bayewitz 1986:107, Fig. 3:19, 20; 1993:156–159, Pl. C3A:2; Johnson 1988:200–201, Fig. 7-43:636; Koucky and Lapp 1989:110, Pls. 51:5, 6; 53:13, 17; Calderon 2000:140, Pl. XXIII:49).

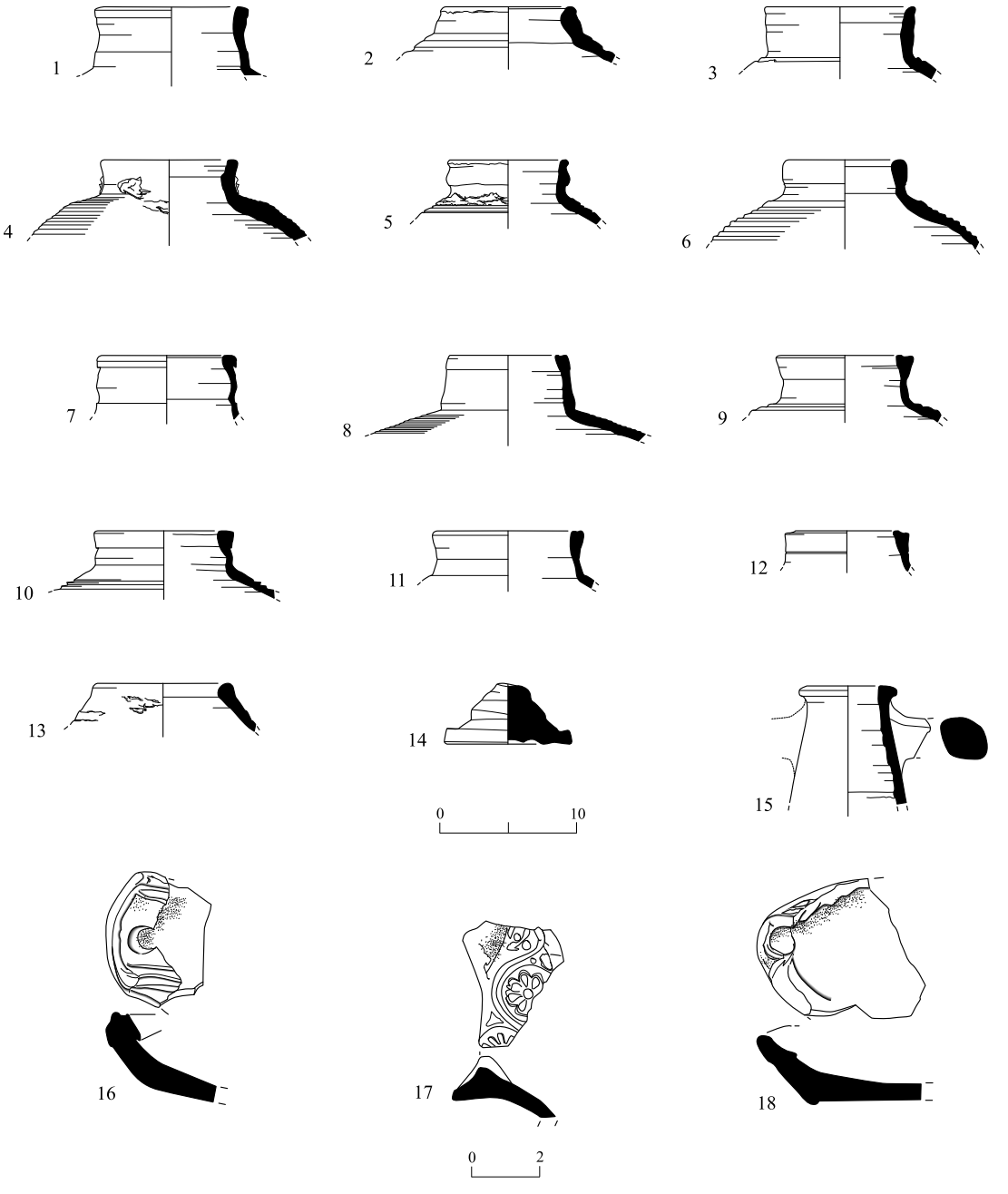

Fig. 7. Byzantine pottery: storage jars and amphorae (1–15), and oil lamps (16–18).

◂ **Fig. 7**

No.	Vessel	Locus	Basket No.	Description
1	Storage jar	1116	10129/3	Reddish yellow gritty fabric
2	Storage jar	1613	16007	Reddish yellow gritty fabric
3	Storage jar	459	4514/1	Reddish yellow gritty fabric; pinkish coating
4	Storage jar	311	3021/1	Reddish yellow gritty coarse fabric
5	Storage jar	157	1521/1	Yellowish red hard fabric
6	Storage jar	333	3054/23	Reddish yellow gritty coarse fabric
7	Storage jar	309	3015/2	Dark brown hard fabric; black surface
8	Storage jar	157	1524/4	Dark brown hard fabric; gray surface
9	Storage jar	311	3021/3	Dark red hard fabric; gray surface
10	Storage jar	333	3054/15	Dark brown hard fabric; gray surface
11	Storage jar	461	4516/2	Dark gray hard fabric
12	Storage jar	1116	10129/1	Dark gray hard fabric
13	Amphora	514	5038/4	Brown gritty fabric
14	Stopper	151	1511/5	Gray gritty fabric
15	Amphora	157	1521/6	Brown gritty fabric
16	Oil lamp	338	3845/5	Reddish yellow gritty fabric
17	Oil lamp	150	1507/10	Pink hard fabric
18	Oil lamp	301	3007/9	Pink hard fabric

Storage Jars and Amphorae

Bag-Shaped Storage Jars (Fig. 7:1–12).— This is the most common storage-jar type at Kerem Maharal. It comprises two groups, each made from a distinct fabric: red or gray. The red bag-shaped jars have a rather soft reddish fabric, and judging by the predominance of this type in Caesarea and at other sites in its vicinity (Riley 1975; Adan-Bayewitz 1986; Magness 1992; Calderon 2000), it seems to have been produced in workshops in the northern Sharon and southern Carmel regions. The gray bag-shaped jars, also frequent at Kerem Maharal, have a hard gray or reddish gray fabric; they were probably produced in Galilee or in the Jordan Valley (Landgraf 1980:80; Adan-Bayewitz 1986:99–101).

The group of red bag-shaped jars (Fig. 7:1–6) yielded three variants, each with a different rim shape. Jars with a vertical triangular rim (Fig. 7:1), similar to Riley's Type 1A/B (Riley 1975:26–27, No. 6), are frequently found in fifth-century CE deposits at Caesarea (Blakely 1987:126, 135, Figs. 37:130, 132; 41:170; Oleson et al. 1994:16–17, Fig. 4:20, 21; Tomber 1999:302, Fig. 4:79). Jars with a short, vertical rounded rim (Fig. 7:2–5), similar to Riley's Type 1B/Y (1975:26–27, Nos. 1, 2, 4, 6), are common during the fifth–sixth centuries CE at Caesarea (Adan-Bayewitz 1986:91–96, Fig. 1:4–6; Magness 1992:131, Figs. 58:16–21; 64:1–3; Tomber 1999: Fig. 8:127, 128) and its vicinity (Calderon 2000:104, Figs. 16–18, Pls. VI:7–10; XVII:11–15). Small globular jars, with a short neck and a square rim (Fig. 7:6)

have parallels at Caesarea (Blakely 1987:140–141, Figs. 37:121, 128; 39:150, 152; 42:185, 186, 192) and Ḥorbat 'Aqav (Calderon 2000:131–132, Fig. 22, Pl. XVIII:19), where they are dated to the late sixth or early seventh–eighth centuries CE.

The group of gray bag-shaped jars (Fig. 7:7–12) also exhibits three variants. Jars with a molded neck and a folded rim (Fig. 7:7) are similar to Loffreda's Class B (1974:43–44, Fig. 8) and Riley's Type 3 (1975:31, No. 17 on p. 32). Such jars were found at Caesarea in deposits dating to the fifth–sixth/early seventh centuries CE (Magness 1992:135–137, Fig. 58:23; Tomber 1999:302, Fig. 4:81). Jars with a cylindrical neck and a flattened rim, slightly inclined inward (Fig. 7:8), are similar to vessels from seventh–early eighth-century CE deposits at Caesarea (Adan-Bayewitz 1986:99–101, Fig. 2:1, Ill. 100) and Pella in Jordan (Koucky and Lapp 1989:113, Pl. 54:1, 2). Jars with a short neck and a thick square rim (Fig. 7:9–12) are similar to vessels dated to the sixth–seventh centuries CE from Tel Kisan (Landgraf 1980:69, Fig. 21:1–10) and Ḥorbat 'Aqav (Calderon 2000:129–131, Pl. XVIII:16–18, Figs. 19–21).

Torpedo-Shaped Amphora (Fig. 7:13).— Only one fragment of a torpedo-shaped amphora, related to Gaza wine jars, was found at Kerem Maharal. It is similar to Majcherek's Form 4, which is dated to the late sixth–seventh centuries CE (Majcherek 1995:169, Pls. 3:4; 7; 8), or even later, throughout the Umayyad period (Magness 1994:135).

Amphora Stopper (Fig. 7:14).— The disc-shaped stopper seems to have belonged to the Gazan amphora type discussed above (Peleg and Reich 1992:154, Fig. 13:2; Majcherek 1995:170).

Imported Amphora (Fig. 7:15).— A fragment of an imported amphora, with a high conical neck and a curved rim, was too small to be identified.

Oil Lamps (Fig. 7:16–18).— Two types of oil lamps were found. One is a nozzle fragment of a lamp (Fig. 7:16) similar to the 'Caesarea type' (Sussman 1980; 2008:245–246), dated to the late fourth–sixth centuries CE (Yosef Porat, pers. comm.). The other type is represented by fragments of oil lamps decorated with ivy-scrolls on the shoulder (Fig. 7:17, 18), resembling the type produced in the north of Israel during the sixth–seventh centuries CE (Rosenthal and Sivan 1978: Nos. 510, 511).

CONCLUSIONS

The pottery assemblage of the Persian–Byzantine periods from the excavations at Kerem Maharal points to several phases of occupation, with some chronological gaps.

The assemblage of the Persian period, although from a limited area (Areas C and I), testifies to a prosperous settlement that was occupied for a long period of time (sixth–fourth centuries BCE). The pottery comprises both local and imported types, including imported

amphorae that indicate a taste for imported goods. The storage jars and amphorae point to a certain influence of the Phoenician coastal cities, such as Dor and ‘Akko, but most of the vessels belong to the local Mount Carmel tradition.

No Hellenistic strata were identified at the site (see ‘Ad and Sa‘id, this volume); however, the Hellenistic-period pottery from disturbed fills considerably outnumbers that of the Persian period.

The next phase of occupation is associated with Roman-period remains in Area H. The pottery assemblage of this period is not rich and is limited to a short period dating from the late first–early second century CE. The local pottery demonstrates affinities with sites in south Phoenicia, such as Dor and ‘Akko, rather than with Caesarea.

In contrast to the previous periods, the architectural remains from the Byzantine period are extensive, and hence the prevalent and diverse pottery assemblage from this time span. Based on the ceramic evidence, activity at the site during the Byzantine period was limited to the end of that period, i.e., the sixth and early seventh centuries CE, possibly continuing into the early Umayyad period (until the end of the seventh century CE).

References

‘Ad U. and Sa‘id K. This volume. Remains from the Prehistoric to the Late Ottoman Periods at Kerem Maharal.

Adan-Bayewitz D. 1986. The Pottery from the Late Byzantine Building (Stratum 4) and Its Implications. In L.I. Levine and E. Netzer. *Excavations at Caesarea Maritima 1975, 1976, 1979—Final Report* (Qedem 21). Jerusalem. Pp. 90–129.

Adan-Bayewitz D. 1993. *Common Pottery in Roman Galilee: A Study of Local Trade*. Ramat Gan.

Avissar M. 1996. The Late Roman and the Byzantine Pottery. In A. Ben-Tor, M. Avissar and Y. Portugali. *Yoqne‘am* I: *The Late Periods* (Qedem Reports 3). Jerusalem. Pp. 66–74.

Ayalon E. 2000. Typology and Chronology of Water-Wheel (*Sāqiya*) Pottery Pots from Israel. *IEJ* 50:216–226.

Bennett W.J. Jr. and Blakely J.A 1989. *Tell el-Hesi* III: *The Persian Period (Stratum V)* (ASOR Excavation Reports) (2 vols.). Winona Lake.

Berlin A. 1997. The Plain Wares. In S.C. Herbert ed. *Tel Anafa* II, i: *The Hellenistic and Roman Pottery* (*JRA* Suppl. S. 10). Ann Arbor. Pp. ix–xiv, 1–244.

Bikai P.M., Fulco W.J. and Marchard J. 1996. *Tyre: The Shrine of Apollo*. Amman.

Blakely J.A. 1987. *The Pottery and Dating of Vault 1: Horreum, Mithraeum and Later Uses* (ASOR; The Joint Expedition to Caesarea Maritima, Excavation Reports IV). Lewiston, N.Y.

Blakely J.A. 1988. Ceramic and Commerce: Amphorae from Caesarea Maritima. *BASOR* 271:31–50.

Blakely J.A. 1992. Stratigraphy and the North Fortification Wall of Herod's Caesarea. In R.L. Vann ed. *Caesarea Papers: Straton's Tower, Herod's Harbour, and Roman and Byzantine Caesarea* (*JRA* Suppl. S. 5). Ann Arbor. Pp. 27–41.

Boas A. 1992. Islamic and Crusader Pottery (c. 640–1265) from the Crusader City (Area TP/4). In R.L. Vann ed. *Caesarea Papers: Straton's Tower, Herod's Harbour, and Roman and Byzantine Caesarea* (*JRA* Suppl. S. 5). Ann Arbor. Pp. 154–166.

Briend J. and Humbert J.-B. eds. 1980. *Tell Keisan (1971–1976): Une cité phénicienne en Galilée* (OBO.SA 1). Fribourg.

Brosh N. 1986. Ceramic Remains: Pottery of the 8th–13th Centuries C.E. (Strata 1–3). In L.I. Levine and E. Netzer. *Excavations at Caesarea Maritima 1975, 1976, 1979—Final Report* (Qedem 21). Jerusalem. Pp. 66–89.

Calderon R. 2000. Roman and Byzantine Pottery. In Y. Hirschfield. *Ramat Hanadiv Excavations: Final Report of the 1984–1998 Seasons*. Jerusalem. Pp. 91–165.

Catling H.W. 1972. An Early Byzantine Pottery Factory at Dhiorios in Cyprus. *Levant* 4:1–82.

Crowfoot G.M. 1957. Terra Sigillata General List. In J.W. Crowfoot, G.M. Crowfoot and K.M. Kenyon. *Samaria-Sebaste* III: *The Objects from Samaria*. London. Pp. 306–357.

Elgavish J. 1974. *Archaeological Excavations at Shiqmona Field Report* 2: *The Level of the Hellenistic Period—Stratum H; Seasons 1963–1970.* Haifa (Hebrew).

Fischer M. and Tal O. 1999. The Hellenistic Period. In I. Roll and O. Tal. *Apollonia-Arsuf; Final Report of the Excavations* I: *The Persian and Hellenistic Period*s (Tel Aviv University Institute of Archaeology Monograph Series 16). Tel Aviv. Pp. 223–261.

Gal Z. and Muqari A. 2002. Excavations at Khirbet Yama (Yaḥem) in the Sharon Plain. In Z. Gal ed. *Eretz Zafon: Studies in Galilean Archaeology*. Jerusalem. Pp. 91–106 (Hebrew; English summary, p. 180*).

Gendelman P. 2010. Pottery Finds from Area B1. In A. Gorzalczany. Baqa el-Gharbiya Area: A Roman-Period Cemetery and Other Finds. *'Atiqot* 64:110*–116* (Hebrew; English summary, pp. 161–162).

Gendelman P. 2012. The Pottery from Ḥorbat Biẓ'a. *'Atiqot* 70:33*– 47*.

Gjerstad E. 1948. *The Swedish Cyprus Expedition* IV, 2: *The Cypro-Geometric, Cypro-Archaic, and Cypro-Classical Periods.* Stockholm.

Grace V.R. 1971. Samian Amphoras. *Hesperia* 40:52–95.

Gorzalczany A. 1999. Petrographic Analysis of Persian Period Pottery—A Preliminary Report. In I. Roll and O. Tal. *Apollonia-Arsuf; Final Report of the Excavations* I: T*he Persian and Hellenistic Periods* (Tel Aviv University Institute of Archaeology Monograph Series 16). Tel Aviv. Pp. 185–189.

Guz-Zilberstein B. 1995. The Typology of the Hellenistic Coarse Ware and Selected Loci of the Hellenistic and Roman Periods. In E. Stern ed. *Excavations at Dor; Final Report* I, B: *Areas A and C. The Finds* (Qedem Reports 2). Jerusalem. Pp. 289–433.

Hayes J.W. 1972. *Late Roman Pottery*. London.

Hayes J.W. 1985. Sigillate Orientali. In *Atlante delle forme ceramiche* II: *Ceramica fine romana nel bacino mediterraneo (tardo ellenismo e primo impero)* (Enciclopedia dell'arte antica classica e orientale). Rome. Pp. 1–96.

Johnson B.L. 1978. Imported Greek Pottery. In E. Stern. *Excavations at Tel Mevorach (1973–1976)* I: *From the Iron Age to the Roman Period* (Qedem 9). Jerusalem. Pp. 40–41.

Johnson B.L. 1988. The Pottery. In G.D. Weinberg ed. *Excavations at Jalame: Site of a Glass Factory in Late Roman Palestine.* Columbia, Mo. Pp. 137–226.

Kapitaikin L.A. 2006. The Pottery from the IAA Excavations at Tel Mikhal (Tel Michal). *'Atiqot* 52:21–56.

Katsnelson N. This volume. The Glass Finds from Kerem Maharal.

Kenyon K.M. 1957. Hellenistic Pottery. In J.W Crowfoot, G.M. Crowfoot and K.M. Kenyon. *Samaria-Sebaste* III: *The Objects from Samaria*. London. Pp. 217–281.

Kletter R. and Rapuano Y. 1998. A Roman Well at Khirbet Ibreiktas. *'Atiqot* 35:43–59.

Koucky F.L. and Lapp E.C. 1989. The Pottery and Small Finds. In R.H. Smith and L.P. Day eds. *Pella of the Decapolis* 2: *Final Report on the College of Wooster Excavations in Area IX, the Civic Complex, 1979–1985.* Wooster. Pp. 96–119.

Landgraf J. 1980. Keisan's Byzantine Pottery. In J. Briend and J.-B. Humbert eds. *Tell Keisan (1971–1976): Une cité phénicienne en Galilée* (OBO.SA 1). Fribourg. Pp. 51–99.

Levine T. 2003. Pottery and Small Finds from Subterranean Complexes 21 and 70. In A. Kloner. *Maresha Excavations Final Report* I: *Subterranean Complexes 21, 44, 70* (IAA Reports 17). Jerusalem. Pp. 73–130.

Loffreda S. 1974. *Cafarnao* II: *La ceramica* (SBF Collectio Maior 19). Jerusalem.

Loffreda S. 1996. *La ceramica di Macheronte e dell'Herodion (90 a.C.–135 d.C.)* (SBF Collectio Maior 39). Jerusalem.

Magness J. 1992. Late Roman and Byzantine Pottery, Preliminary Report, 1990. In R.L. Vann ed. *Caesarea Papers: Straton's Tower, Herod's Harbour, and Roman and Byzantine Caesarea* (*JRA* Suppl. S. 5). Ann Arbor. Pp. 129–153.

Magness J. 1994. The Pottery from Area V/4 at Caesarea. In W.G. Dever ed. *Preliminary Excavation Reports: Sardis, Bir Umm Fawakhir, Tell el-'Umeiri, the Combined Caesarea Expeditions, and Tell Dothan* (AASOR 52). Ann Arbor. Pp. 133–145.

Majcherek G. 1995. Gazan Amphorae: Typology Reconsidered. In H. Meyza and J. Młynarczyk eds. *Hellenistic and Roman Pottery in the Eastern Mediterranean—Advances in Scientific Studies (Acts of the II Nieborów Pottery Workshop, Nieborów, 18–20 December 1993)*. Warsaw. Pp. 163–178.

Marchese R.T. 1989. Aegean and Cypriot Imports in the Persian Period (Strata XI–VI). In Z. Herzog, G. Rapp Jr. and O. Negbi eds. *Excavations at Tel Michal, Israel* (Tel Aviv University Institute of Archaeology Monograph Series 8). Minneapolis–Tel Aviv. Pp. 145–152.

Monakhov S.J. 1999. *Греческие амфоры в Причерноморье (Greek Amphorae in the Black Sea Area: Typology of Amphorae of the Main Centers of Export of Products in Ceramic Containers, Descriptive Catalogue).* Saratov (Russian).

Nahshoni P. 1999. A Byzantine Site in the Migdal Neighborhood, Ashqelon. *'Atiqot* 38:99*–111* (Hebrew; English summary, p. 229).

Nodet E. 1980. Le Niveau 3 (Periode Perse). In J. Briend and J.-B. Humbert eds. *Tell Keisan (1971–1976): Une cité phénicienne en Galilée* (OBO.SA 1). Fribourg. Pp. 117–129.

Oleson J.P., Fitzgerald M.A., Sherwood A.N. and Sidebotham S.E. 1994. *The Harbours of Caesarea Maritima; Results of the Caesarea Ancient Harbour Excavation Project 1980–85* II: *The Finds and the Ship* (BAR Int. S. 594). Oxford.

Peleg M. and Reich R. 1992. Excavations of a Segment of the Byzantine City Wall of Caesarea Maritima. *'Atiqot* 21:137–170.

Porath Y. (J.) 1974. A Fortress of the Persian Period. *'Atiqot* (*HS)* 7:43–55 (English summary, pp. 6*–7*).

Riley J.A. 1975. The Pottery from the First Session of Excavation in the Caesarea Hippodrome. *BASOR* 218:25–63.

Risser M.K. and Blakely J.A.1989. Imported Aegean Fine Ware in the First Millennium B.C.E. In W.J. Bennett Jr. and J.A. Blakely eds. *Tell el-Hesi* III: *The Persian Period (Stratum V)* (ASOR Excavation Reports). Winona Lake. Pp. 69–137.

Rosenthal-Heginbottom R. 1995. Lamps. In E. Stern ed. *Excavations at Dor; Final Report* I, B: *Areas A and C. The Finds* (Qedem Reports 2). Jerusalem. Pp. 234–251.

Rosenthal R. and Sivan R. 1978. *Ancient Lamps in the Schloessinger Collection* (Qedem 8). Jerusalem.

Salles J.-F. 1980. Le Niveau 4. In J. Briend and J.-B. Humbert eds. *Tell Keisan (1971–1976): Une cité phénicienne en Galilée* (OBO.SA 1). Fribourg. Pp. 131–156.

Salles J.-F. 1983. *Kition-Bamboula* II: *Les égouts de la ville classique* (Mémoire 27). Paris.

Sarig S. 2009. Pottery of Roman Neapolis. In Y. Magen. *Flavia Neapolis: Shechem in the Roman Period* II (JSP 11). Jerusalem. Pp. 3–22.

Segal O., Kletter R. and Ziffer I. 2006. A Persian-Period Building from Tel Ya'oz (Tell Ghaza). *'Atiqot* 52:1*–24* (Hebrew; English summary, p. 203).

Siegelmann A. 1996. Soundings at Ḥ. Qastra, 1988. *'Atiqot* 29:77*–92* (Hebrew; English summary, p. 113)

Siegelman A. 1998. The Pottery from the Sumaqa Excavations. In S. Dar. *Sumaqa: A Jewish Village on the Carmel.* Jerusalem. Pp. 311–356 (Hebrew).

Silberstein N. 2000. Hellenistic and Roman Pottery. In Y. Hirschfeld. *Ramat Hanadiv Excavations: Final Report of the 1984–1998 Seasons*. Jerusalem. Pp. 420–469.

Singer-Avitz L. 1989. Local Pottery of the Persian Period (Strata XI–VI). In Z. Herzog, G. Rapp Jr. and O. Negbi eds. *Excavations at Tel Michal, Israel* (Tel Aviv University Institute of Archaeology Monograph Series 8). Minneapolis–Tel Aviv. Pp. 115–144.

Sparkes B.A. and Talcott L. 1970. *Black and Plain Pottery of the 6th, 5th and 4th Centuries B.C.* (The Athenian Agora XII). Princeton.

Stacey D. 2004. *Excavations at Tiberias, 1973–1974: The Early Islamic Periods* (IAA Reports 21). Jerusalem.

Stern E. 1978. *Excavations at Tel Mevorakh (1973–1976*) I: *From the Iron Age to the Roman Period* (Qedem 9). Jerusalem.

Stern E. 1982. *Material Culture of the Land of the Bible in the Persian Period 538–332 B.C.* Warminster–Jerusalem.

Stern E. 1995. Local Pottery of the Persian Period. In E. Stern ed. *Excavations at Dor; Final Report* I, B: *Areas A and C. The Finds* (Qedem Reports 2). Jerusalem. Pp. 51–92.

Sussman V. 1980. Moulds for Lamps and Figurines from a Caesarea Workshop. *'Atiqot* (*ES*) 14:76–79.

Sussman V. 2008. The Oil Lamps. In J. Patrich. *Archaeological Excavations at Caesarea Maritima; Areas CC, KK and NN; Final Reports* I: *The Objects.* Jerusalem. Pp. 207–300.

Tal O. 1999. The Persian Period. In I. Roll and O. Tal. *Apollonia-Arsuf; Final Report of the Excavations* I: *The Persian and Hellenistic Periods* (Tel Aviv University Institute of Archaeology Monograph Series 16). Tel Aviv. Pp. 83–222.

Thompson H.A. 1934. Two Centuries of Hellenistic Pottery. *Hesperia* 3:311–480.

Tomber R. 1999. Pottery from the Sediments of the Inner Harbour (Area I14). In K.G. Holum, A. Raban and J. Patrich eds. *Caesarea Papers* 2: *Herod's Temple, the Provincial Governor's Praetorium and Granaries, the Later Harbor, a Gold Coin Hoard, and Other Studies* (*JRA* Suppl. S. 35). Portsmouth, R.I. Pp. 295–322.

Vincenz A. de 2004. The Pottery Assemblage from Horbat Raqit. In S. Dar. *Raqit: Marinus' Estate on the Carmel, Israel* (BAR Int. S. 1300). Oxford. Pp. 213–241.