'Atiqot 106, 2022

Chalkstone Vessels from Bishop Gobat School, Mount Zion, Jerusalem

David Amit

In the excavations within the grounds of Bishop Gobat School on the western slopes of Mount Zion, a rich and varied selection of chalkstone vessels was found (see Re'em, this volume: Fig. 23). Such stone vessels are typical finds within Jewish settlements of the late Second Temple period and between the Revolts (first century BCE–second century CE). It is commonly accepted that these vessels were produced due to *halakhic* constrictions, according to which pottery vessels could become impure, while stone vessels retained their purity. Stone vessels have been discovered in many sites in Herodian-period Jerusalem, including the Upper City (Tushingham 1985; Reich 2003; Geva 2006; 2010) and the City of David (Cahill 1992; Zilberstein and Nissim Ben Efraim 2013). Ten stone vessel fragments were selected for publication from the Stratum IVA dump that covered the stairway and the rock steps; it should be noted that they were not found in a domestic context. The following discussion is based on the type definition and typology established by Magen (2002).

Handmade Cups (Fig. 1:1–3).— Vessel Nos. 1–3 are fragments of the base and part of the wall of three cups of a type known as "measuring cups," owing to the assumption that they were used for measuring the volume of drinks and food. These vessels were pared with a chisel, exhibiting characteristic rectangular loop handles through which a round hole was drilled, and a spout that emerges from the rim at a 90° angle to the handle (Magen 2002: Fig. 2.34); occasionally, cups with two handles lack a spout (Magen 2002: Fig. 2.33:2, 3, 5–9, 9). Although these are among the most common Judean chalkstone vessels (Magen 2002:40–46), at Mount Zion they are few in relation to the lathe-made vessels in the assemblage (see below).

Bowl, Chalice and Cups Made on a Lathe (Fig. 1:4–7).— These vessels are fine tableware. Bowl No. 4 is open and shallow, Magen's Type I.1.A.iii Form 1 (Magen 2002:66–67). Bowl No. 5 is hemispheric (Type I.1.A.vi; Magen 2002:69–71). Chalice(?) No. 6 may belong to Magen's Type I.1.C. (2002:71–72); however, as the base of the foot that characterizes such chalices had not survived, its identification is not clear. Cup No. 7 is Type I.1.B. (Magen 2002:71).

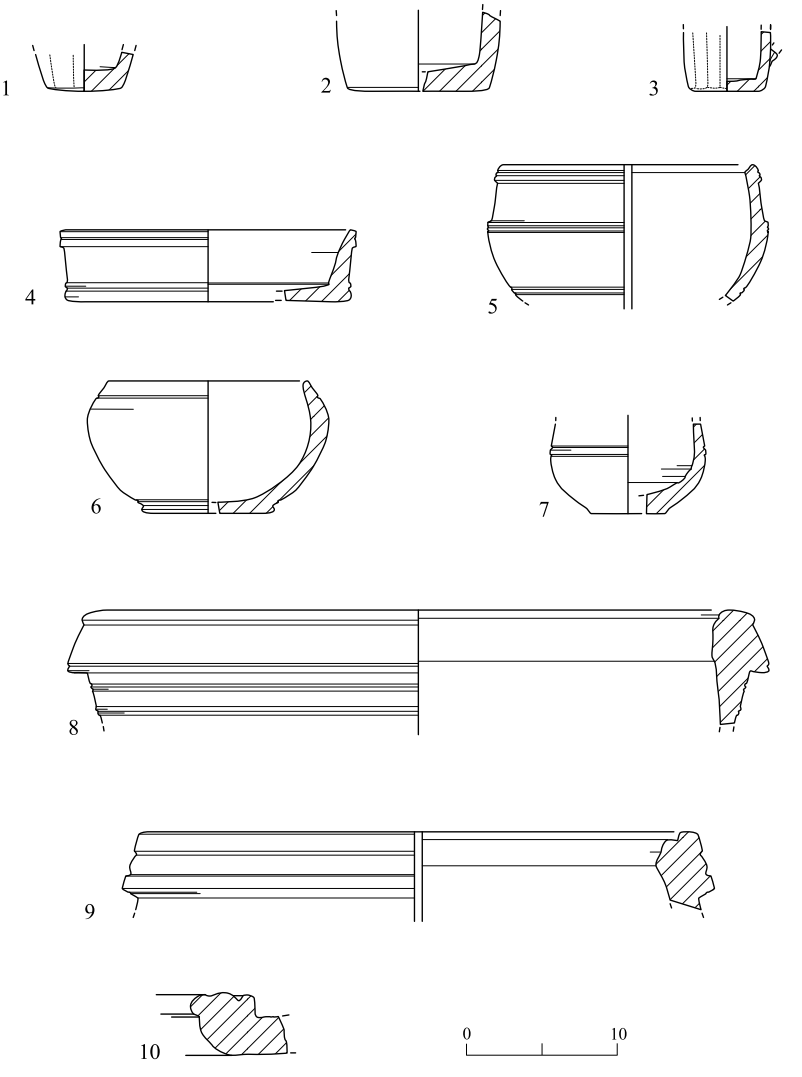

Fig. 1. Chalkstone vessels.

No.	Vessel	Locus	Basket
1	Cup	52	1030/10
2	Cup	61	1042/6
3	Cup	63	1061/8
4	Bowl	76	1077/1
5	Bowl	63	1061/6
6	Chalice(?)	52	1031/6
7	Cup	52	1030/2
8	Krater	52	1018/6
9	Krater	61	1060/29
10	Krater	61	1052/8

Kraters (Fig. 1:8–10).— These fragments of decorated rims belonged to kraters Type I.2.B.i, Form 1 (Magen 2002:80–88). The first to identify this vessel with the Talmudic *Kallal* was Avigad (1983:174–175); however, Adler (2011:210–212) raised some objections to this identification.

Summary

The coins and pottery retrieved from the excavation, and the chalkstone vessels uncovered in the fills, support the dating of the assemblage to the first century BCE–first century CE. The large amount of fine table ware produced on a lathe, and the kraters, attest that these vessels originated in the houses of affluent families. The kraters were produced on a large and complex lathe (Amit, Seligman and Zilberbod 2008:327–329), and were expensive compared to the "measuring" cups. It may be assumed that the assemblage found on the slopes of Mount Zion was part of the refuse thrown from the Upper City, where the wealthy families of Second Temple period Jerusalem resided. If these vessels were originally part of one assemblage, it might be suggested that the "measuring" cups, including those with a spout, were used for dipping into the kraters—a substitute for the ceramic dipper juglets used for ceramic and metal kraters.

References

Adler Y. 2011. *Archaeology of Purity: Archaeological Evidence for the Observance of Ritual Purity in Eretz-Israel from the Hasmonean Period until the End of the Talmudic Era (164 BCE–400 CE).* Ph.D. diss. Bar Ilan University. Ramat Gan (Hebrew; English summary, pp. i–iii).

Avigad N. 1983. *Discovering Jerusalem*. Nashville.

Amit D., Seligman J. and Zilberbod I. 2008. Stone Vessel Production Caves on the Eastern Slope of Mount Scopus, Jerusalem. In Y.M. Rowan and J.R. Ebeling eds. *New Approaches to Old Stones: Recent Studies of Ground Stone Artifacts.* London–Oakville. Pp. 320–342.

Cahill J.M. 1992. Chalk Vessel Assemblages of the Persian/Hellenistic and Early Roman Periods. In A. De Groot and D.T. Ariel eds. *Excavations at the City of David 1978–1985 Directed by Yigal Shiloh* III: *Stratigraphical, Environmental, and Other Reports* (Qedem 33). Jerusalem. Pp. 190–274.

Geva H. 2006. Stone Artifacts. In H. Geva. *Jewish Quarter Excavations in the Old City of Jerusalem Conducted by Nahman Avigad, 1969–1982* III: *Area E and Other Studies; Final Report*. Jerusalem. Pp. 218–238.

Geva H. 2010. Stone Artifacts. In H. Geva. *Jewish Quarter Excavations in the Old City of Jerusalem Conducted by Nahman Avigad, 1969–1982* IV: *The Burnt House of Area B and Other Studies, Final Report*. Jerusalem. Pp. 154–212.

Magen Y. 2002. *The Stone Vessel Industry in the Second Temple Period: Excavations at Ḥizma and the Jerusalem Temple Mount* (JSP 1). Jerusalem.

Re'em A. This volume. A Herodian-Period Staircase on Mount Zion, Jerusalem, and a Reevaluation of the Remains from Bishop Gobat School.

Reich R. 2003. Stone Vessels, Weights and Architectural Fragments. In H. Geva. *Jewish Quarter Excavations in the Old City of Jerusalem Conducted by Nahman Avigad, 1969–1982* II: *The Finds from Areas A, W and X-2; Final Report.* Jerusalem. Pp. 263–291.

Tushingham A.D. 1985. *Excavations in Jerusalem 1961–1967* I. Toronto.

Zilberstein A. and Nissim Ben Efraim N. 2013. The Stone Vessels and Furniture of the Early Roman Period. In D. Ben-Ami. *Jerusalem: Excavations in the Tyropoeon Valley (Giv'ati Parking Lot)* I (IAA Reports 52). Jerusalem. Pp. 213–228.