'Atiqot 108, 2022

Early Bronze Age Remains in the Southern Part of Tel Bet Yeraḥ

Amir Golani

Introduction

In May 2014, a salvage excavation was conducted in the southern part of Tel Bet Yeraḥ—one of the largest and best-known of the Early Bronze Age mounds in the Southern Levant.[1] The site is adjacent to and north of the modern outlet of the Jordan River, in the southern part of the Sea of Galilee (map ref. 254027–89/735385–416; Fig. 1). It has been extensively excavated by local and international expeditions (for comprehensive reviews of previous research, see Getzov 2006; Greenberg et al. 2006; Greenberg 2014; Greenberg, Tal and Da'adli 2017). Previous excavations were mainly confined to the eastern part of the site, while a survey and partial excavation of a massive Early Bronze Age fortification wall (termed Wall C in P. Bar-Adon's excavations) took place along the southern and western edges of the site (Fig. 1). The present excavation was located in Area AG, c. 75 m to the north of a large rampart, which was part of the southern defenses of the Early Bronze Age settlement uncovered by P. Bar-Adon between 1953 and 1955, and c. 50 m to the east of Area GE, along Road 90, excavated in 1994–1995 (Getzov 2006).

---

[1] The excavation (Permit No. A-7103) was conducted on behalf of the Israel Antiquities Authority and directed by the author at the request of the 'Emeq Ha-Yarden regional council. The excavation preceeded the construction of a new sports hall within the confines of the Bet Yeraḥ Regional School. The building was designed to be supported by pillars so that the area underneath, including the excavation, can be accessed in the future (for a preliminary report, see Golani 2016). The excavation was assisted by Uri Laban and Yossi Ya'aqobi (administration), Rivka Mishayev, Roi Liran and Mendel Kahan (field surveying), Yaron Bibas (field photography), Tanya Meltsen and Elisabeth Belashov (draughtsmanship), Leea Porat (ceramic restoration and conservation), Avshalom Karasik and Argita Gyerman-Levanon (digital drawing), Clara Amit (artifact photography) and Zach Horowitz (district archaeologist). Maayan Shemer (flint), Gil Haklay and Ianir Milevski (ground-stone tools), Inbar Ktalav (mollusks) and Nadeshda Knudsen (zoomorphic figurine) aided in the processing of the finds.

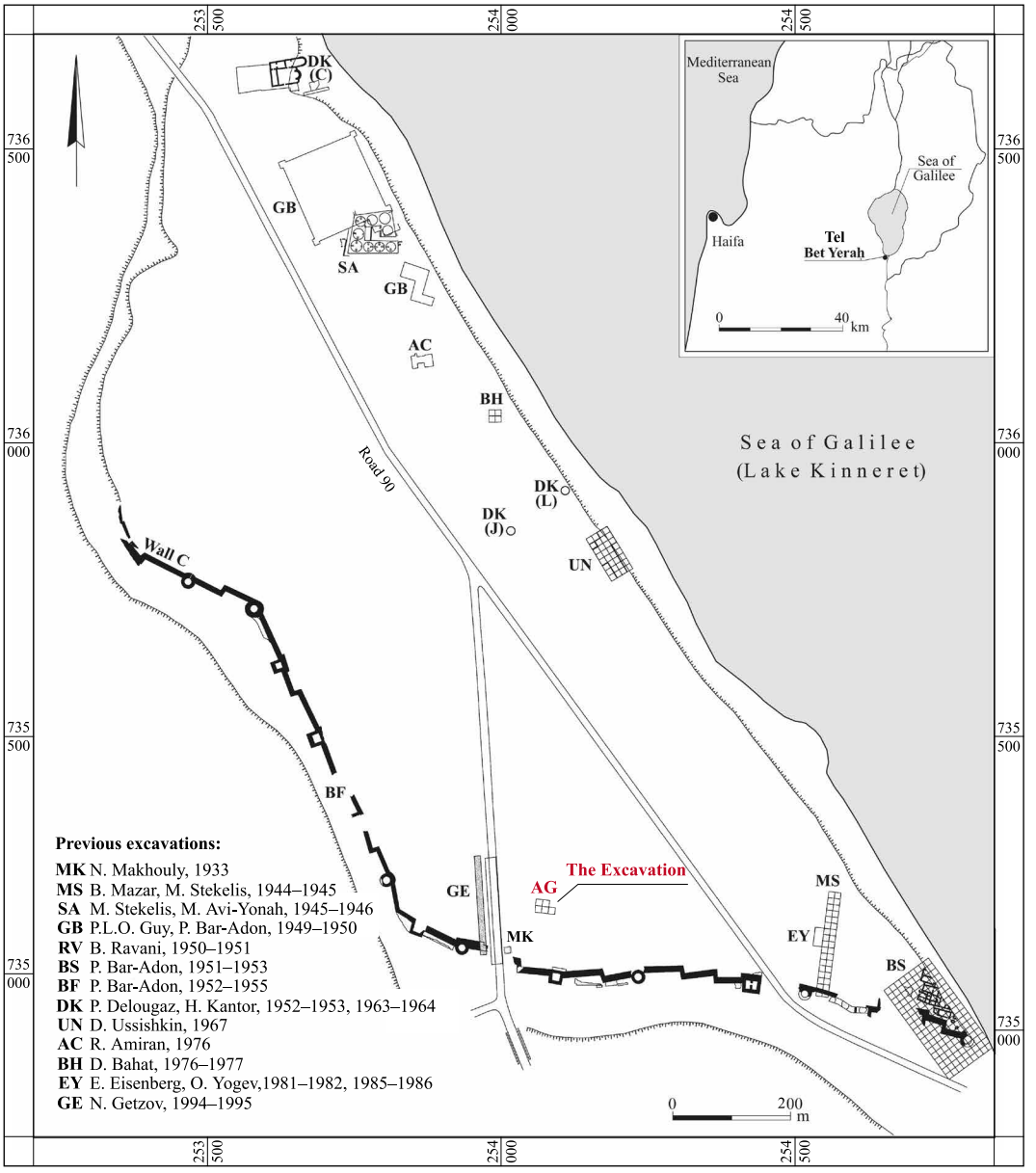

Fig. 1. Location map of the excavation and of previous excavations at the site (adapted from Greenberg et al. 2006: Plan 1.1).

THE EXCAVATION

Four squares were excavated (4 × 4 m each; Plan 1: Section 1–1), the two northern ones were dug down to the basal sterile marl, revealing that this basal deposit was of a level topography. Five occupation strata were observed between the ground surface and the basal level (depth 1.4 m) dating to EB IB (Stratum V), EB II (Stratum IV) and EB III (Strata

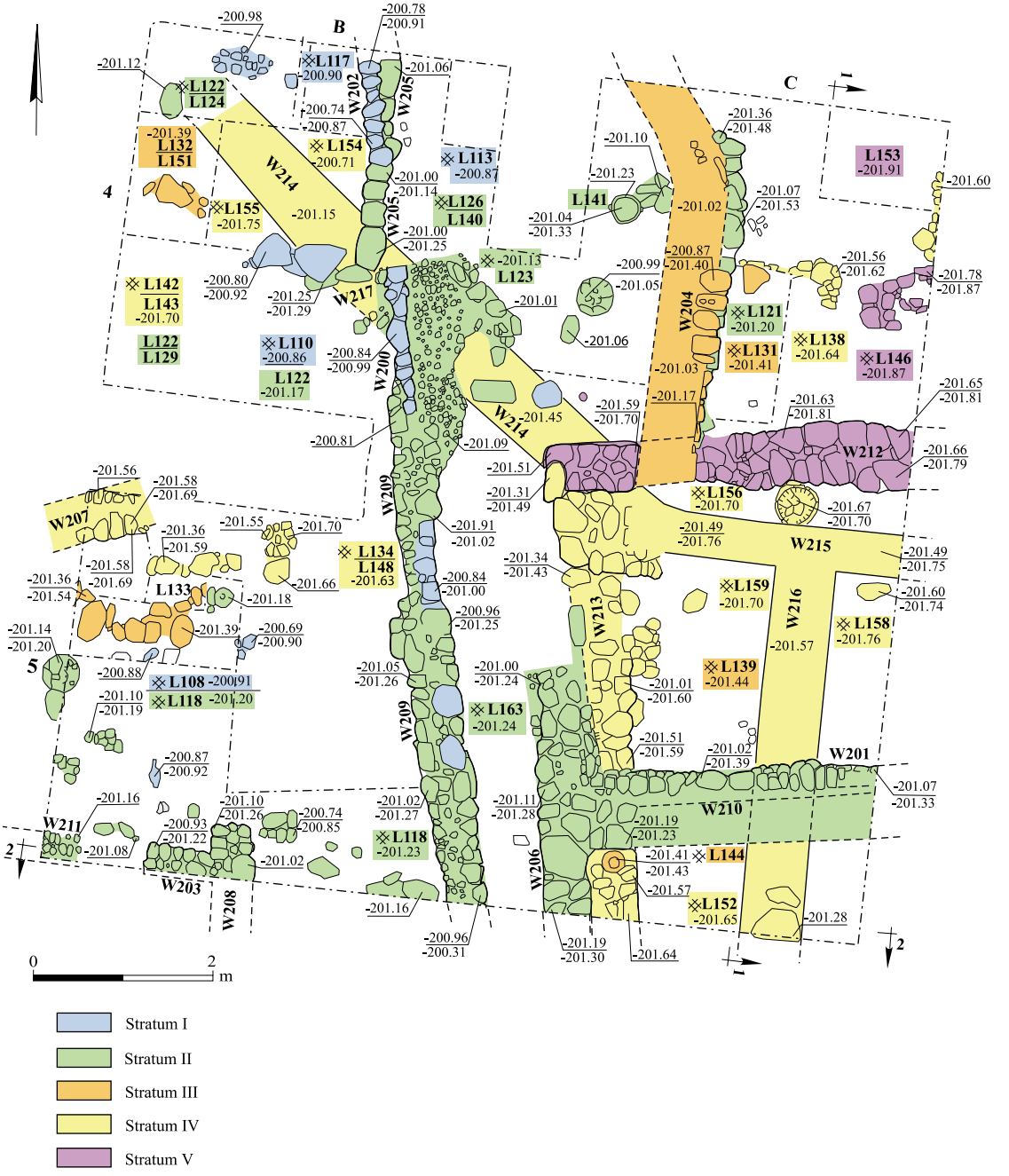

Plan 1. The architectural remains, Strata V–I, plan and sections.

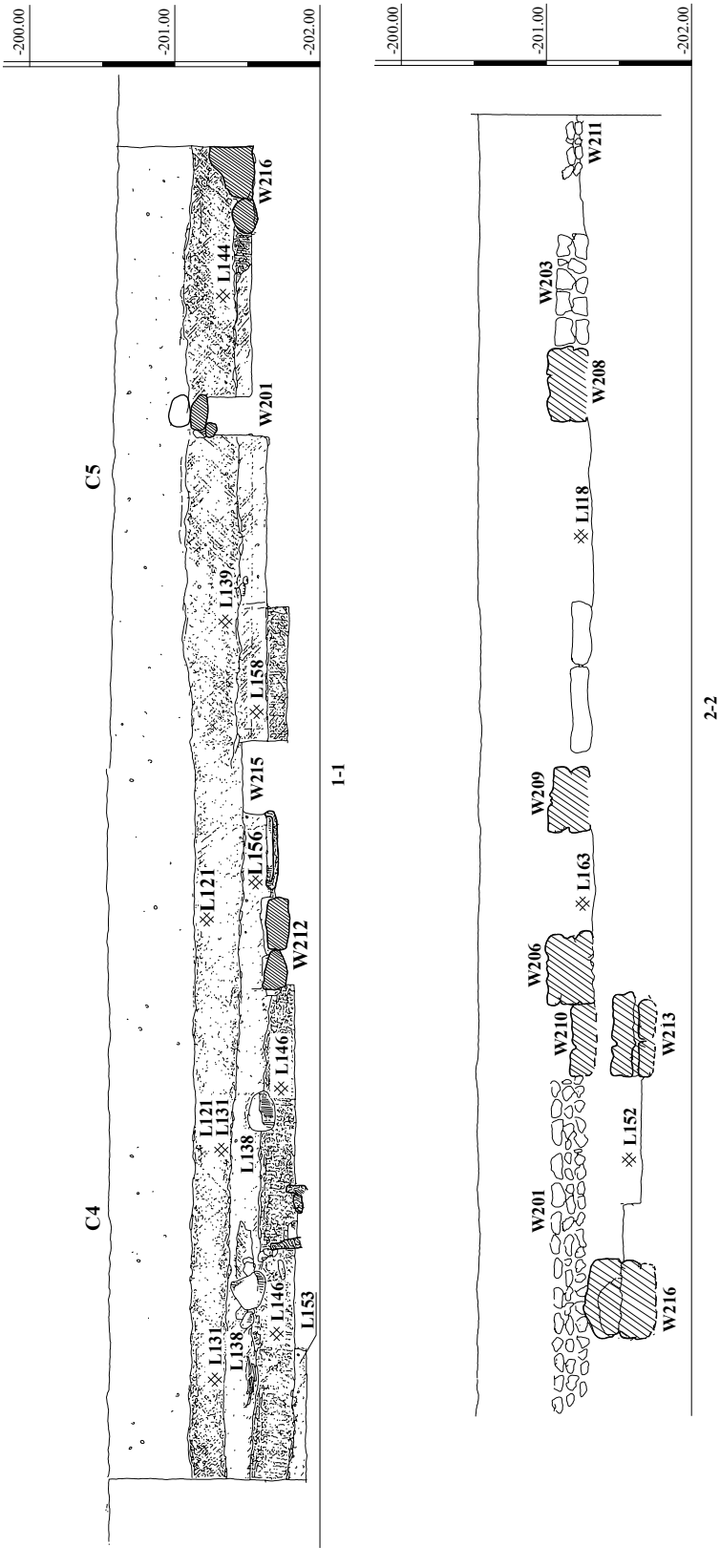
-200.00
-201.00
-202.00
C4
C5
W216
L144
W201
L139
L158
W215
L156
L121
W212
L146
L121
L131
L138
L146
L153
L131
L138
1-1
W211
W203
W208
L118
W209
L163
W206
W210
W213
L152
W201
W216
2-2

Plan 1. (cont.).

III–I). The walls were constructed of medium- to small-sized local basalt stones and mud-brick material; the mud-brick outlines were not always clear. Habitation surfaces associated with the walls were usually identified at their base. Excavation in a fifth square in the eastern part of the excavated area (not on plan) revealed archaeological deposits disturbed by a large and shallow pit of the Hellenistic period that had removed architectural elements of Strata III–I; excavation was subsequently discontinued in this square. The exposed strata are described below from earliest to latest.

Stratum V

The remains of this stratum consisted of a stone wall segment (W212), one course high, and an associated beaten-earth surface (L146), its northern end overlaid by debris (Plan 1: Section 1–1; Figs. 2, 3). Several stones arranged in an arch, part of what may have been an installation of unclear shape and function, were exposed atop Surface 146. A small probe excavated below this surface (L153) revealed that it had been laid upon sterile marl (Plan 1: Section 1–1). Pottery found upon Surface 146 exclusively comprised late EB I types of northern Israel ceramic tradition (Fig. 12), indicating that this stratum dates to a very late stage of northern EB IB. A ceramic zoomorphic figurine was also uncovered atop Surface 146 (see Knudsen, this volume).

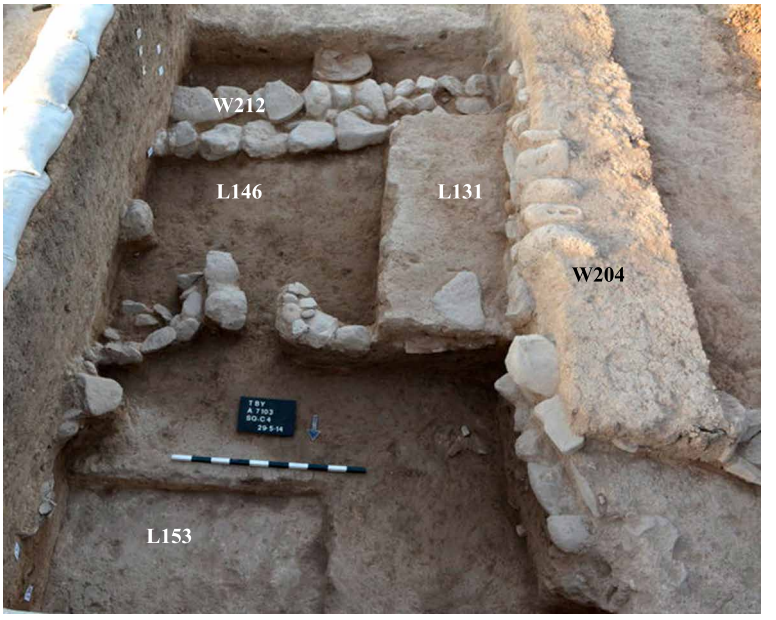

Fig. 2. Stratum V W212 and Surface 146, looking south; note sterile basal level in Probe 153 and Stratum III W204 with Surface 131 abutting its base.

Fig. 3. Stratum V W212, looking east; note EB II Metallic Ware platter adjacent to the base of Stratum IV W215 at right.

Stratum IV

This stratum yielded more substantial wall remains than Stratum V, although these remains were not well-preserved and comprised either a stone foundation or mud-brick material lacking a stone foundation (Plan 1). The mud-brick material consisted of a light brown-gray, well-levigated marly earth that could easily be distinguished from the surrounding darker matrix.

A segment of an east–west mud-brick wall (W215) lacking stone foundations was revealed in the eastern part of the excavated area. North of W215, a beaten-earth surface (L138, L156) was laid directly upon Stratum V W212 (Plan 1: Section 1–1). A complete EB II platter of Metallic Ware, made of reddish clay and well-burnished on its interior and exterior, was found upon Surface 156, adjacent to W215 (Figs. 2, 3; see Fig. 13:8). Another mud-brick wall (W216), of similar construction and state of preservation, joined W215 perpendicularly; two large stones at the southern end of this wall appear to have been incorporated in it (Plan 1: Section 2–2). Wall 216 was abutted by beaten-earth surfaces on its east (L158; Plan 1: Section 1–1) and west (L159, L152; Plan 1: Section 2–2). Surfaces 159 and 152 also abutted a partially collapsed stone wall on the west (W213), preserved to a height of one course; this wall was built at a slightly incongruent orientation to it. Although W213 appears to meet W212 of Stratum IV at a right angle and a similar technique was used in their construction (Fig. 4), the fact that the former clearly overrode the latter negates the possibility that these walls coexisted.

Fig. 4. Stratum IV W213 at right, directly overriding Stratum V W212 at left, looking east.

The western end of W215 joined W213 at nearly a right angle; it also joined another wall (W214; length 5.5 m) at an obtuse angle. The juncture of these three walls was buttressed by stones and overrode the western end of Stratum V W212 (Fig. 4). Wall 214, extending toward the northwest and continuing outside the excavated area, was made of mud bricks and lacked a stone foundation. Two beaten-earth surfaces abutted W214 near its northwestern section: one (L154) to its north and another (L155 and L142; Fig. 5) to its south. Excavation of the makeup (L143) of Surface 142 revealed that it was founded directly upon the sterile marl. The continuation of this surface was identified further to the south (L134/148, Sq B5), where it was badly disturbed by later building activities. The makeup of Surface 134 abutted another wall (W207), a short segment of a stone foundation revealed at the northwestern corner of Sq B5 (Plan 1).

Stratum III

Remains of this stratum were poorly preserved in most of the excavation area, possibly due to intrusive activities of Stratum II. A north–south mud-brick wall (W204), its northern part curving slightly to the northwest (Plan 1), was exposed. It was partly faced with medium- to large-sized stones and abutted by a beaten-earth surface (L131; Fig. 2) on its east.

Seemingly isolated patches of Stratum III beaten-earth surfaces were exposed in the southeastern part of the excavated area (Sq C5; L139 and L144), at the same level as that of Surface 131 to their north. These surfaces were laid immediately above earlier Stratum IV

Fig. 5. Wall 214 and other stratified elements in Sq B4, looking northeast.

surfaces and below those of Stratum II (Plan 1: Section 1–1). Remains of another beaten-earth surface and its makeup (L132/151) were revealed above Stratum IV W214 in Sq B4, and an accumulation of medium- to large-sized stones (L133) was found above earlier Stratum IV remains and below a Stratum II beaten-earth surface in Sq B5. The presence of a small amount of Khirbat Kerak Ware (not illustrated), first appearing in Stratum III, indicates an EB III date (but see *Discussion*, below).

Stratum II

Remains of this stratum were the most substantial in the excavation area, including two successive surfaces with evidence of renewal.

Stratum III W204 appears to have remained in use at this time, when buttressing stones were added to its eastern face. A beaten-earth surface abutting this wall on its eastern side (L121) was laid upon the earlier Stratum III Surface 131. To the west of W204 was another beaten-earth surface (L141), upon which an upright storage jar was found (Fig. 6; see Fig. 20:10).

Part of a building of unclear plan, consisting of two perpendicularly joined walls (Sq C5; W206 and W210/201), was revealed directly above Strata IV–III remains, which it annulled. Wall 206 was constructed of two rows of medium- to small-sized stones. Wall 210/201 was constructed of mud-brick material with no stone foundation and was faced with medium- to small-sized stones along its northern face (Plan 1: Section 2–2); both W206 and W210/201 were preserved to a height of three courses. No clear surfaces were found associated with these walls.

Fig. 6. Upright storage jar (L141) adjacent to W204, looking east.

Fig. 7. The alleyway between W206 and W209, looking west.

A wall of another building (W209), built of two rows of medium- to small-sized stones and preserved to a height of two courses, was exposed to the west of W206 and was separated from it by a narrow alleyway (Fig. 7). This alleyway may have accessed a large open area to the north, extending between W209 and W204. In this open area, the partial remains of

Fig. 8. The alleyway between W206 and W209, looking south; note the remains of Pavement 123 of small stones and cobbles.

a pavement of small stones and cobbles (L123; Fig. 8) abutted the eastern face of W209. A thin buildup of densely packed debris that included numerous small stones (L163) was found in the southern part of the alleyway. The line of W209 appears to have continued north (W205). Wall 205 was made of medium- to small-sized stones; the alleyway may have continued along this wall. A beaten-earth surface (L126/140) was identified near W205, in Sq B4. This surface, in the open area between W205 and W204, was renewed in a later construction phase of Stratum II, and a complete bowl was uncovered atop it (Fig. 9; see Fig. 17:11).

The possibility that Stratum II W209 was coeval with Stratum IV W213 and formed a 1.5 m wide alleyway later narrowed by the construction of Stratum II W206, was considered

Fig. 9. A complete platter-bowl upon Surface 126, looking west.

but found implausible.[2] This reconstruction is in part unlikely as the base of W209 lies c. 30 cm above the top of W213. Furthermore, W213 joined Stratum IV W214, mitigating against the possibility that it survived to the period of Stratum II. Wall 214 is shown to have been dismantled to its foundation during the construction of the Stratum II alleyway, while its continuation to the northwest in Sq B4 was preserved to a greater height of an additional 30 cm above the level of the alleyway. At that time, two large paving stones of the alleyway were embedded in W214.

A short segment of a partition wall (W217), built of one row of medium-sized stones and preserved to a height of two courses, joined W205 perpendicularly on its west. A beaten-earth surface (L122/124) abutting W205 was found north of W217.

Three short wall segments (W211, W203, W208) that seem to enclose a room with an entrance, were exposed in Sq B5. A beaten-earth surface (L118) to the north of these remains seems to have extended over the entire area to the west of W209 and W205, forming a wide open space (Fig. 10). Several complete and broken ceramic vessels, including two holemouth jars (see Fig. 19:5, 11), jugs (Fig. 21:2, 6), an amphoriskos (Fig. 21:8) and a small amount of Khirbat Kerak Ware sherds (Fig. 17:1, 2), were uncovered above Surface 118. The Khirbat Kerak Ware indicates an EB III date for Stratum II.

[2] The author wishes to thank the anonymous reader for suggesting a different interpretation of the architectural evidence.

Fig. 10. The open area of Surface 118, looking west; W203 and 208 are seen at lower left; note the remains of two jugs upon the surface at upper center.

Fig. 11. Remains of Strata II and I in Sq B4, looking north; W217 at center covered by two large stones of Stratum I W200 seen at lower right and W205 and W202 at upper right.

Stratum I

Remains of the final settlement phase were poorly preserved and identified only in the western part of the excavated area (Plan 1). Additional remains of this stratum may have existed to the east of the excavated area, but were largely removed by the aforementioned Hellenistic-period disturbance. The extensive open space on the western side of the excavation apparently continued to be used as such at the time of Stratum I. At that time, minor modifications were made to the Stratum II architecture and the beaten-earth surfaces were renewed (L108 and L110), laid directly atop the Stratum II surfaces. Part of this large open space was paved by two large, flat stones positioned directly atop Stratum II W217 (Sq B4; Fig. 11). A line of medium-sized stones (W202) was laid upon W205, seemingly to retain its orientation. A beaten-earth surface that overrode the stones of W205 was identified to the east of W202 (L113), and a similar beaten-earth surface (L117) was identified to its west.

A few short wall segments similar in construction to W202 were found atop W209, the most substantial of which overlay its northern end (W200). Wall 209 that was initially built as part of Stratum II seems to have remained in use at the time of Stratum I, as Surface 108 abutted a few of its uppermost stones. Surface 108 yielded two complete Abydos-type jars (see Fig. 23:9, 10).

The Pottery

The ceramic assemblages originated from a small area of the excavation, and their small quantity limits the information that could be obtained from it. Representative ceramic forms from each of the five strata were selected from loci of secure stratigraphic context, and are described below in chronological order. While the presence of residual or intrusive sherds is always a possibility when dealing with small pottery fragments, secure chronological assignment of the strata was made possible by the finding of complete or nearly complete vessels upon surfaces that could also be related to walls within the stratigraphic sequence.

All the ceramics from the excavation were handmade, the rims and finishing of the vessels usually completed on a slow wheel (tournette). The majority of the ceramics are well-fired, and the quality of the firing is especially high from Stratum IV onward. These assemblages are compared below mainly to material from previous excavations at Tel Bet Yearḥ (e.g., Greenberg 1996; 2000; 2014; Greenberg and Porat 1996; Getzov 2006; Greenberg and Iserlis 2014).

Stratum V: Early Bronze Age IB (Fig. 12)

The ceramic assemblage from this stratum was collected from a soil accumulation upon Surface 146. It is typical of the eastern Galilee, a distinct northern variant of EB IB, closely resembling EB IB material from previous excavations at Tel Bet Yeraḥ Period B (Greenberg 2014: Table 2, Figs. 3.31–3.33) and Stratum V (Getzov 2006:14–26). The ceramics are generally made of light brown to brown clay with gray and white grits, usually of small size, and invariably bear a distinctive red wash on the exterior; it is noteworthy that this red wash characterizes open and closed vessels alike. The assemblage is composed of bowls (Fig. 12:1), platter-bowls (Fig. 12:2), holemouth vessels (Fig. 12:3–8) and storage jars (Fig. 12:9–

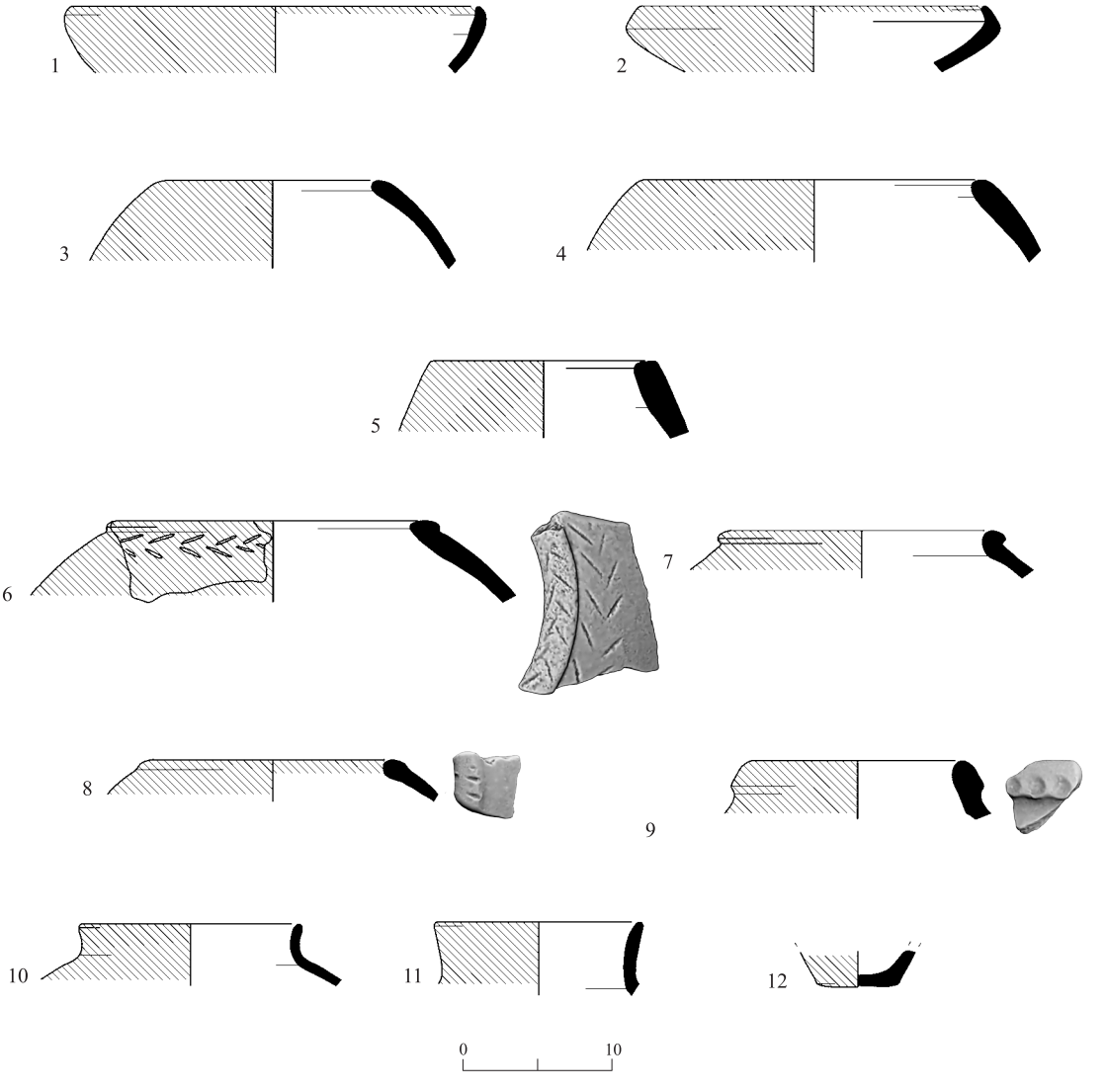

Fig. 12. Stratum V ceramics (EB IB): bowl, platter-bowl, holemouths and storage jars.

◂ **Fig. 12**

No.	Vessel	Locus	Reg. No.	Description
1	Bowl	146	1138/4	Brown clay; gray-brown core; small white and gray grits; burned red wash on ext.; well-fired
2	Platter-bowl	146	1138	Light brown clay; gray-brown core; small white and gray grits; red wash on ext.; well-fired
3	Holemouth	146	1132	Brown clay; gray-brown core; small to medium white and gray grits; red wash on ext.; medium-fired
4	Holemouth	146	1139/1	Light brown clay; gray-brown core; small to medium white and gray grits; red wash on ext.; well-fired
5	Holemouth	146	1132/5	Gray-brown clay; gray-brown core; small to medium white and gray grits; red wash on ext.; medium-fired
6	Holemouth	146	1132/2	Light brown clay; gray-brown core; small to medium white and gray grits; incised herringbone decoration on rim and shoulder; red wash on ext.; well-fired
7	Holemouth	146	1139/3	Light brown clay; gray-brown core; small white and gray grits; red wash on ext.; well-fired
8	Holemouth	146	1132/6	Brown clay; gray-brown core; small white and gray grits; diagonal incisions on rim; red wash on ext.; well-fired
9	Storage jar	146	1138/3	Light brown clay; gray-brown core; small white and gray grits; thumb impressions on rim; red wash on ext.; well-fired
10	Storage jar	146	1132/3	Light brown clay; gray-brown core; small to medium white and gray grits; red wash on ext.; well-fired
11	Storage jar	146	1139	Light brown clay; gray-brown core; small white and gray grits; red wash on ext.; well-fired
12	Jar base	146	1125	Light brown clay; gray-brown core; small white and gray grits; finger impressions on base; red wash on ext.; well-fired

11). A flat base of an unknown jar type (Fig. 12:12) was also found. Some of the holemouth vessels, especially those with rims thickened on their exterior, bear incised diagonal or herringbone decoration on or just below the rim (Fig. 12:6, 8). A very similar vessel was recovered from Stratum V in Getzov's (2006: Fig. 2.16:7) excavations. Continuous thumb-impressed decoration is often found on the large storage jars (Fig. 12:9). A small quantity of body sherds bearing grain wash or band slip decoration was also recovered from this locus (not illustrated). It is conspicuous that forms typical of the western Galilee and coastal regions, such as Gray Burnished Ware bowls and Bow Rim storage jars, are absent from this assemblage.

Stratum IV: Early Bronze Age II (Figs. 13, 14)

This assemblage originated primarily from two surfaces (L134 and L138/L156) and is generally representative of Tel Bet Yeraḥ Period C, dated to EB II (Greenberg 2014:59–76), and Stratum IV (Getzov 2006:68–77). It is composed of platter-bowls and platters (Fig.

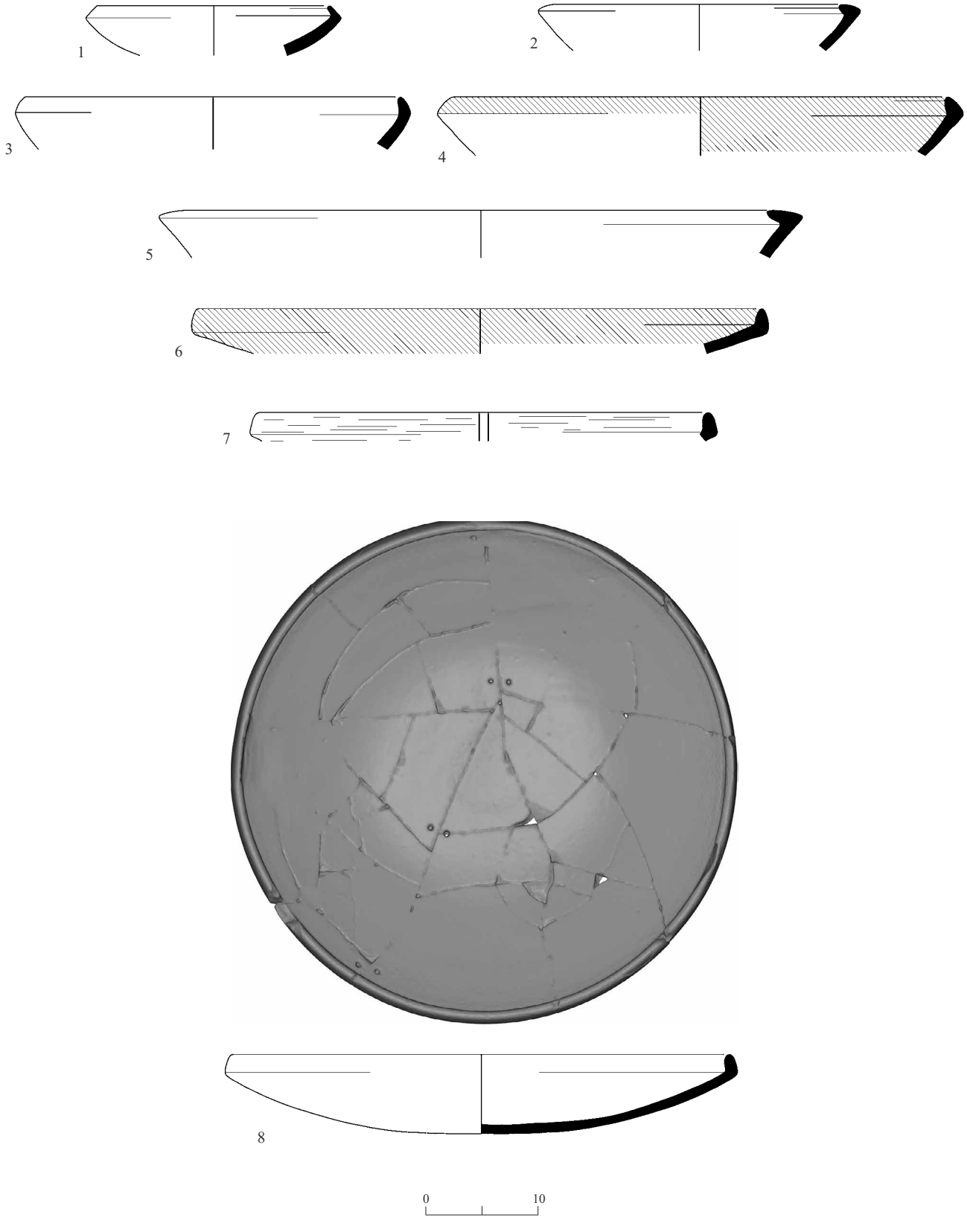

Fig. 13. Stratum IV ceramics (EB II): platter-bowls and platters.

◂ **Fig. 13**

No.	Vessel	Locus	Reg. No.	Description
1	Platter-bowl	134	1116-3	Brown-red clay; brown-red core; small to medium white and gray grits; well-burnished on int. and ext.; very well-fired
2	Platter-bowl	138	1118-8	Brown-red clay; brown-red core; small to medium white and gray grits; well-burnished on int. and ext.; very well-fired
3	Platter-bowl	134	1128-5	Light brown clay; gray core; small white and gray grits; well-fired
4	Platter-bowl	134	1116	Light brown-red clay; brown-red core; small white grits; well-burnished on int. and ext.; very well-fired
5	Platter-bowl	138	1118-9	Light buff clay; gray core; light buff core; small white grits; burnished on int. and ext.; very well-fired
6	Platter	134	1093-2	Brown-red clay; brown-red core; small white grits; well-burnished on int. and ext.; very well-fired
7	Platter	138	1118-3	Brown clay; brown core; small white and gray grits; horizontal burnish on int. and ext.; very well-fired
8	Platter	156	1171-1	Brown-red clay; brown-red core; small white grits; well-burnished on int. and ext.; very well-fired

13), holemouth vessels (Fig. 14:1–5) and jugs (Fig. 14:6–9). It is noteworthy that while serving and cooking vessels are well-represented among the Stratum IV material, storage jars are absent, indicating that the excavated area functioned primarily as a domestic space at that time. The platter-bowls and platters (Fig. 13) belong to the ceramic tradition of North Canaanite Metallic Ware (NCMW) prevalent in EB II (Greenberg and Porat 1996; Greenberg 2000), and well-documented at numerous sites, such as Qiryat Ata (Golani 2003), Tel Qashish (Zuckerman 2003) and Tel Dan (Greenberg 1996). These vessels, termed 'Carinated-Rim Bowls' by Getzov (2006:69–70) and believed to have been imported from the Mount Hermon region, were largely uncovered in the northern part of Tel Bet Yeraḥ (Greenberg 2014:59). Platters generally represent a ubiquitous vessel form of EB II and EB III. The complete large platter found adjacent to W215 (Fig. 13:8) was cracked along its length and underwent repair by means of four pairs of drilled holes positioned along the crack and presumably used to bind the vessel together with a cord (for more information concerning this technique and further references, see Dooijes and Nieuwenhuyse 2009).

The Stratum IV holemouth vessels (Fig. 14:1–5) are all cooking pots with a dark brown exterior and a reddish-brown interior. These vessels correspond to Greenberg's Type CP3, described as a local manufacture (Greenberg 2017:60–63), and Getzov's 'Brown Holemouth Jars' (Getzov 2006:76, Fig. 3.43:1–9). Paz and Iserlis (2009) attributed these vessels to a Golanite production center. It should be noted, nonetheless, that only rim fragments of

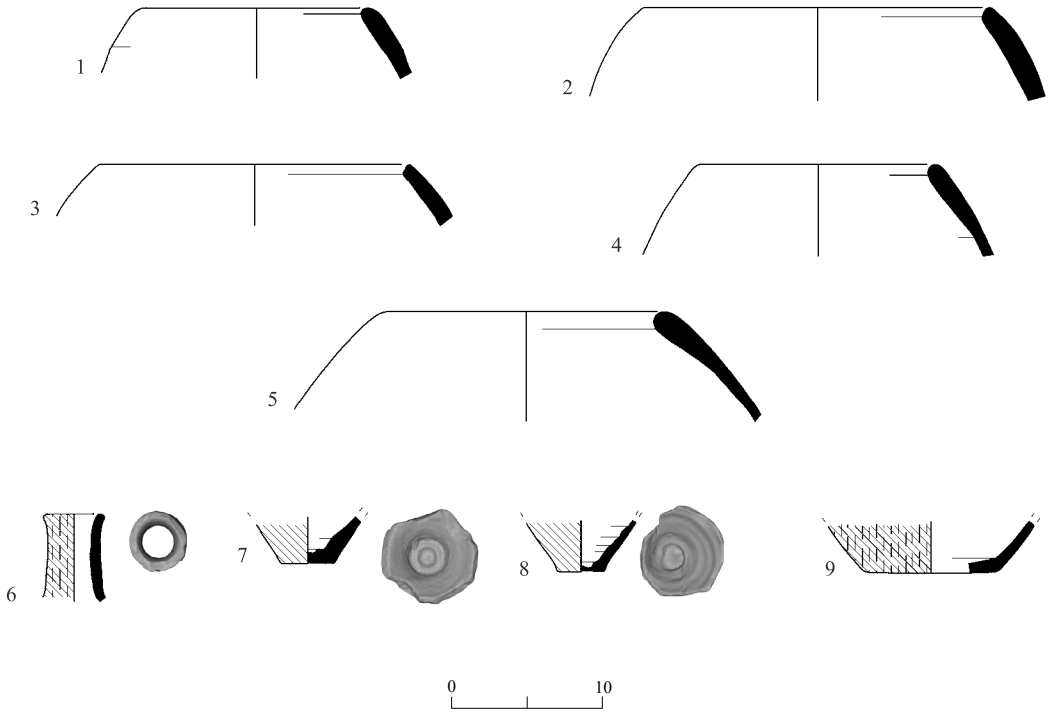

Fig. 14. Stratum IV ceramics (EB II): holemouths and jugs.

No.	Vessel	Locus	Reg. No.	Description
1	Holemouth	156	1171	Dark brown-red clay; gray core; small white grits; medium fired
2	Holemouth	134	1128-2	Dark brown-red clay; gray core; small white grits; well-fired
3	Holemouth	134	1128-1	Dark brown clay; dark gray core; small white grits; medium fired
4	Holemouth	138	1161	Dark brown-red clay; gray core; small white grits; medium fired
5	Holemouth	138	1118-6	Dark brown-red clay; gray core; small white grits; medium fired
6	Jug	138	1118-10	Brown-red clay; gray core; small white grits; red wash and vertical burnish on ext.; very well-fired
7	Jug base	134	1128-3	Brown-orange clay; brown-orange core; small white grits; red wash on ext.; very well-fired; soot marks on edge
8	Jug base	138	1096	Light buff clay; light brown-gray core; small white grits; burned red wash and burnish on ext,; very well-fired
9	Jug base	138	1096-1	Light brown clay; gray core; small white and gray grits; well-fired

such vessels were found in the present excavation and therefore, it is difficult to ascertain whether their whole form was spheroid or oval. The rims of the holemouths in Fig. 14:1, 4, 5 are rounded and thickened, while those in Fig. 14:2, 3 are slightly squared off, a distinction also found in Greenberg's study of such vessels (2017:61) and employed in defining two subtypes, CP3a and CP3b, also differentiated by their fabric.

The jugs comprise a fragment with a high neck and vertical burnish (Fig. 14:6) and three bases (Fig. 14:7–9). The neck fragment (Fig. 14:6) is a local imitation of the well-known Abydos-type jugs; its brown fabric attests to an affiliation with the local workshop of Tel Bet Yeraḥ termed the 'southern potter' (Greenberg 2017:63–76). The base in Fig. 14:7 may also have been a product of this workshop; soot marks on its edge indicate that it was reused as a lamp. The base in Fig. 14:8 belongs to a jug of fine craftsmanship, apparently of NCMW, in which the red slip or wash was burned in the firing process. The base in Fig. 14:9, not of NCMW, represents the group of 'common ware' and is well-burnished over a red wash.

Strata III–I: Early Bronze Age III (Figs. 15–23)

It is widely known that most of the EB II ceramic types continued into EB III and hence, assigning pottery sherds to either one of these periods may be problematic in lieu of *fossiles directeurs* such as EB II 'Light Faced Painted Ware' or EB III Khirbat Kerak Ware (KKW) (Esse 1991:64–67; Greenberg 1996:105; 2000). At Tel Bet Yeraḥ, local pottery production as part of the 'southern potter' tradition in the southern part of the mound continued from EB II (Period C) into EB III (Period D), and included a wide range of forms that largely imitate those of the imported NCMW material (Greenberg 2014:63–76). These vessels remain dominant at Tel Bet Yeraḥ until the latter part of EB III (Greenberg 2014:85 ff.).

The assemblages from Strata III–I of Area AG are representative of Period D at Tel Bet Yeraḥ, or Strata III–II in Getzov's (2006:77–93) excavations, all dated to EB III (Greenberg 2014:76–91). The appearance of KKW in these strata, albeit in very small quantities (see Figs. 15:10; 17:1–3), allows us to securely attribute them to EB III (see Greenberg 2000).

The Stratum III pottery comprises mostly material that could belong to either EB II or III, including typical products of the 'southern potter' tradition, and only a small quantity of KKW material. The dating of this stratum to EB III is uncertain due to the small assemblage size and the possibility that the few KKW sherds could be intrusive. It may, therefore, date to either late EB II or early EB III. This is not the case with Strata II and I that yielded larger quantities of KKW material and reveal a more dominant presence of large platters with a radial pattern of burnish (Figs. 18:3; 22:11) and stump-based juglets (Fig. 21:7), indicating a more likely affinity with EB III.

The pottery of Strata III–I includes small locally produced bowls, most of which are shallow and have a somewhat hemispherical shape and a simple tapering rim (Figs. 15:1; 17:5, 6; 22:1, 2). Small, crudely made carinated bowls were found only in Stratum III (Fig. 15:2, 3), and despite their poor quality, they appear to have been southern imports belonging to a family of bowls that were produced from late EB I through EB III (Beck 1985). Larger bowls, usually with inverted rims (Figs. 15:6, 7; 17:8–12; 22:3–6) are a common component of Strata III–I, typical of both EB II and III (Greenberg 2014:86).

The platters, also very common in Strata III–I, include examples that continue EB II forms of the NCMW tradition (Figs. 15:8, 9; 18:4–8; 22:8–10), although these vessels become larger and thicker than their predecessors, mainly in Strata II–I. Unlike earlier

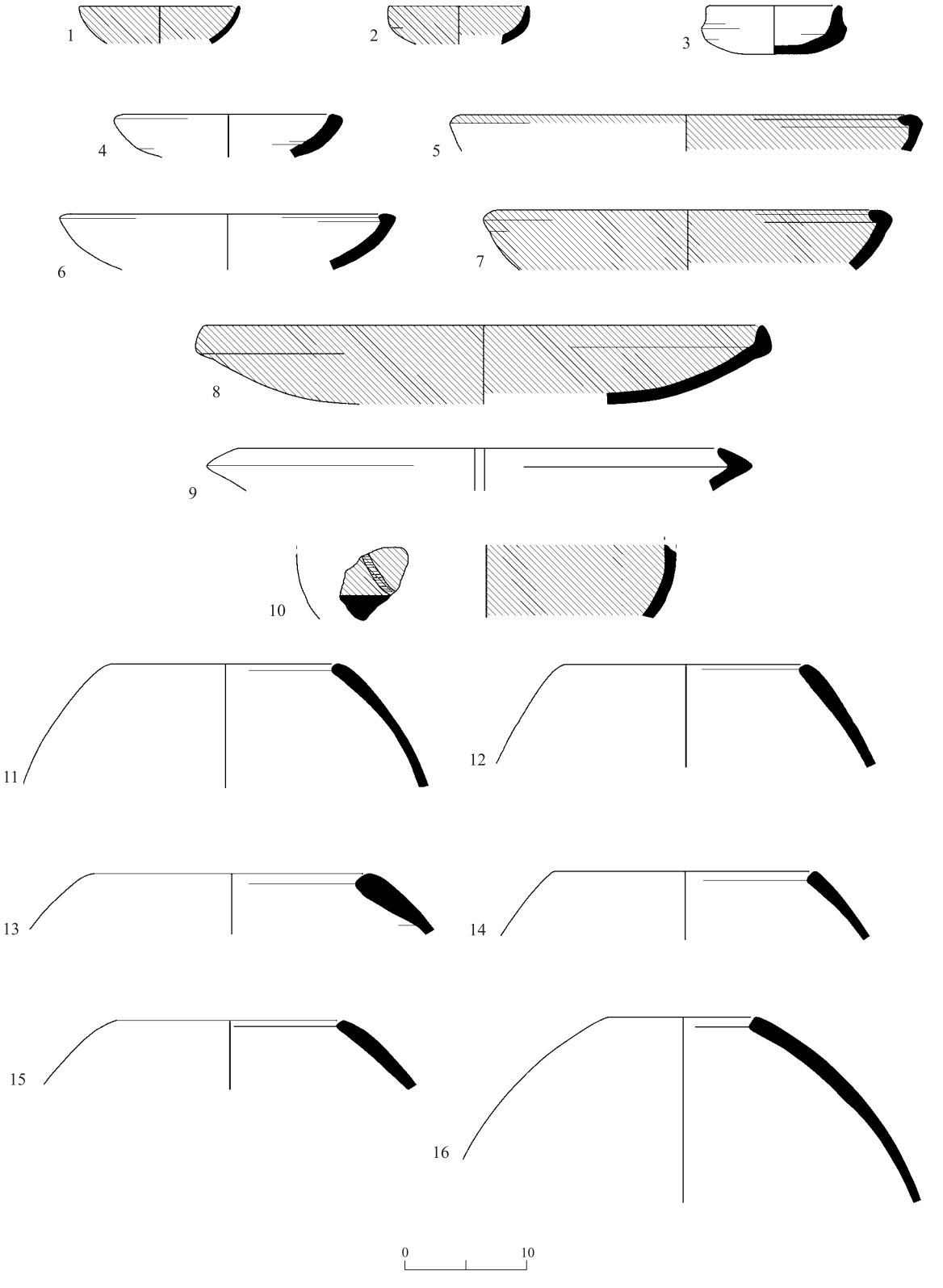

Fig. 15. Stratum III ceramics (EB III): bowls, platter-bowls, platters and holemouths.

◂ **Fig. 15**

No.	Vessel	Locus	Reg. No.	Description
1	Bowl	139	1094	Light buff clay; light buff core; small white grits; red wash on int. and ext.; well-fired
2	Bowl	131	1151	Light brown clay; gray core; small white grits; red wash on int. and ext.; well-fired
3	Bowl	139	1094/1	Light brown clay; light brown core; small white and gray grits; well-fired
4	Bowl	144	1117/1	Light brown clay; brown core; small white grits; very well-fired
5	Bowl	131	1076	Light brown clay; brown core; small white and gray grits; very well-fired
6	Platter-bowl	131	1078	Brown-orange clay; brown-orange core; small white and gray grits; red wash on int.; very well-fired
7	Platter-bowl	132	1077	Brown-orange clay; brown-orange core; small white and gray grits; red slip on int. and ext.; very well-fired
8	Platter	132	1131	Brown-orange clay; brown-orange core; small white and gray grits; red slip on int. and ext.; very well-fired
9	Platter	131	1076/3	Brown-orange clay; brown-orange core; small white and gray grits; very well-fired
10	Bowl (KKW)	131	1151/1	Brown clay; brown core; small white grits; red slip and lustrous burnish on int. and ext.
11	Holemouth	132	1087	Dark brown clay; dark gray brown core; small white grits; medium fired
12	Holemouth	144	1145/1	Dark brown-gray clay; dark brown core; small white grits; medium fired
13	Holemouth	132	1087/1	Dark brown-red clay; dark brown core; small white grits; well-fired
14	Holemouth	139	1127/2	Dark brown-gray clay; dark brown core; small white grits; medium fired
15	Holemouth	144	1143	Light brown-gray clay; dark brown core; small to medium white and gray grits; medium fired
16	Holemouth	144	1117	Light brown-gray clay; dark brown core; small to medium white and gray grits; medium fired

forms, these platters also bear a radial pattern of burnish or a sloppily executed circular burnish on their interior (Figs. 18:1–3; 22:7, 11). The platter-bowl in Fig. 22:12 is straight-walled rather than of a hemispherical shape as the other platter-bowls.

The holemouth vessels in Strata III–I have rounded, thickened or squared-off profiles, similar to the forms retrieved from Stratum IV (EB II; Figs. 15:11–16; 19; 23:1–3) and typical of both EB II and EB III (Greenberg 2014:84). These are all ‘Golanite’ cooking pots

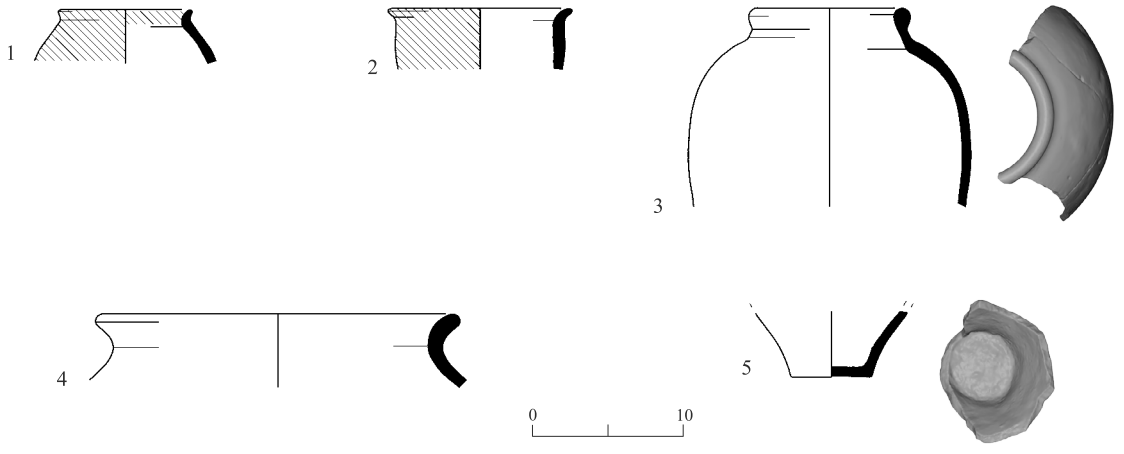

Fig. 16. Stratum III ceramics (EB III): jars, cooking pot and jug.

No.	Vessel	Locus	Reg. No.	Description
1	Small jar	131	1084	Light brown clay; light brown core; small white grits; red slip on ext.; very well-fired
2	Small jar	131	1076-1	Light buff clay; light brown-gray core; small white grits; red wash on ext.; medium fired
3	Store jar	139	1127	Light brown-red clay; brown-red core; small white grits; well-fired; Egyptian?
4	Cooking pot	131	1076-2	Dark brown clay; dark gray core; small white grits; well-fired
5	Jug base	132	1082	Brown-orange clay; brown-orange core; small white and gray grits; string-cut base; very well-fired; soot marks on broken edges

of local manufacture (see Paz and Iserlis 2009) that tend to display the grayish fabric more common in EB III than in EB II, when brown or reddish-brown fabrics usually predominate (see Esse 1982:123–124, 130). One Stratum II holemouth sherd bears a rectangle-shaped potmark below the rim (Fig. 19:7) and another Stratum III fragment belongs to a low-necked vessel (Fig. 16:4; see also Getzov 2006:76, Figs. 3.43:10; 3.52:14).

Storage jars comprise an infrequent component of the assemblages from Strata III–I and represent a limited number of forms, including relatively small vessels that are usually decorated with a red wash on their exterior and display sloping shoulders and a simple everted rim (Figs. 16:1, 2; 20:1–5; 23:8). One of these fragments retains remnants of a small loop handle extending from the shoulder to the rim (Fig. 20:2), possibly belonging to a 'mug,' typical of the 'southern potter' tradition of Tel Bet Yeraḥ during both EB II (Greenberg 2014: Fig. 3.44) and EB III (Greenberg 2014: Fig. 3.59:11–14). These vessels, also named 'broad juglets' by Getzov (2006:84, Fig. 3.49:1–8) were common in Stratum III in his excavations at Tel Bet Yeraḥ. The relatively small size of the handle of such vessels led Greenberg (2014:66) to suggest that they functioned as scoops for foodstuffs stored

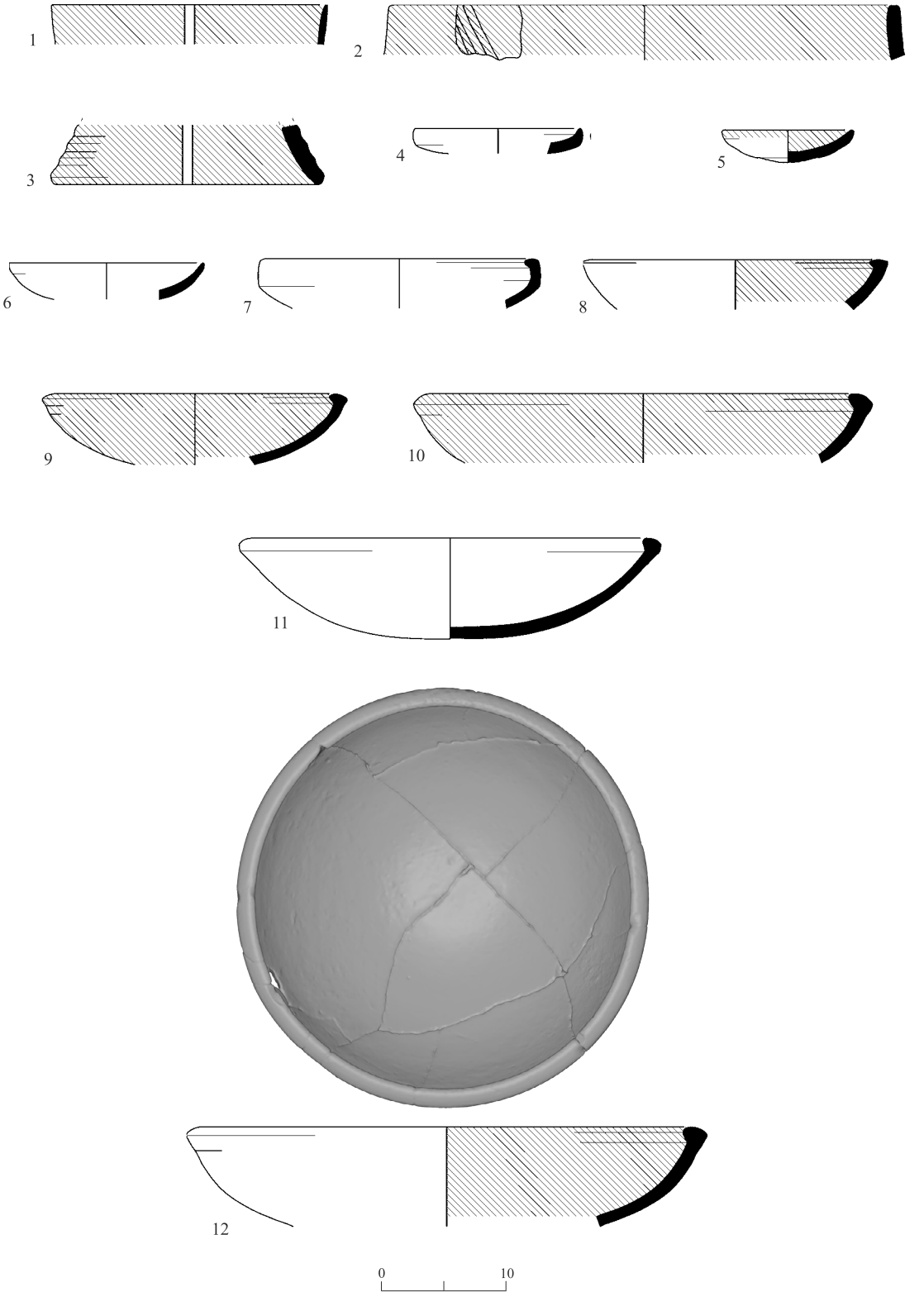

Fig. 17. Stratum II ceramics (EB III): KKW vessels and other bowls.

◂ **Fig. 17**

No.	Vessel	Locus	Reg. No.	Description
1	KKW bowl	118	1050	Light brown clay; brown core; small white grits; red slip and lustrous burnish on int. and ext.; very well-fired
2	KKW bowl	118	1078/1	Brown clay; brown core; small white grits; diagonal ridges on ext.; red slip and lustrous burnish on int. and ext.; very well-fired
3	KKW stand	123	1045/1	Brown clay; brown core; small white grits; horizontal ridges on ext.; red slip and lustrous burnish on int. and ext.; very well-fired
4	Bowl	126	1086/1	Gray clay; gray core; small white grits; well-fired
5	Bowl	118	1074	Light brown clay; light brown-gray core; small white grits; red wash on int.; well-fired
6	Bowl	122	1097/4	Light gray-brown clay; light brown core; small white and gray grits; very well-fired
7	Bowl	118	1050/1	Light brown clay; light brown-gray core; small white and gray grits; very well-fired
8	Bowl	141	1164/6	Light brown clay; light brown-gray core; small white and gray grits; red wash on int.; very well-fired
9	Bowl	129	1119	Light brown clay; light brown-gray core; small white grits; red wash on int. and ext.; very well-fired
10	Bowl	123	1072/2	Light brown clay; light brown-gray core; small white and gray grits; red wash on int. and ext.; very well-fired
11	Bowl	126	1068	Light brown clay; light brown-gray core; small white and gray grits; well-fired
12	Bowl	118	1045	Light brown clay; light brown-gray core; small white and gray grits; red wash on int.; well-fired

in bulk. Examples of this type may also occur as twin vessels (Fig. 23:12; see Greenberg 2014:66, Figs. 3.13; 3.44:13).

A medium-sized squat jar with a short neck and a thickened outturned rim (Figs. 16:3; 20:9) that is made of a brown to reddish-brown fabric is an uncommon type among the Tel Bet Yeraḥ pottery in both its form and fabric. This vessel may be identified as either an imported product from Early Dynastic Egypt or a local Canaanite imitation of such vessels that has been described in previous excavations at the site (Greenberg and Eisenberg 2002: Fig. 13.3; Greenberg 2014: Fig. 3.45:8; for Egyptian parallels of this vessel, see Petrie 1921: Pl. L:530).[3]

Other types of storage jars, found primarily in Strata II and I, include short-necked forms with an outflaring rim (Figs. 20:6–8; 23:4, 5), high-necked forms with an outflaring rim (Fig. 23:6, 7) and large pithoi with a high everted neck and a sharply everted, slightly channeled rim (Fig. 20:11, 12). Both the short- and the high-necked forms are found in

[3] Petrographic analysis of vessels of this type has not yet been carried out to determine wheather they were in fact Egyptian imports or locally made imitations.

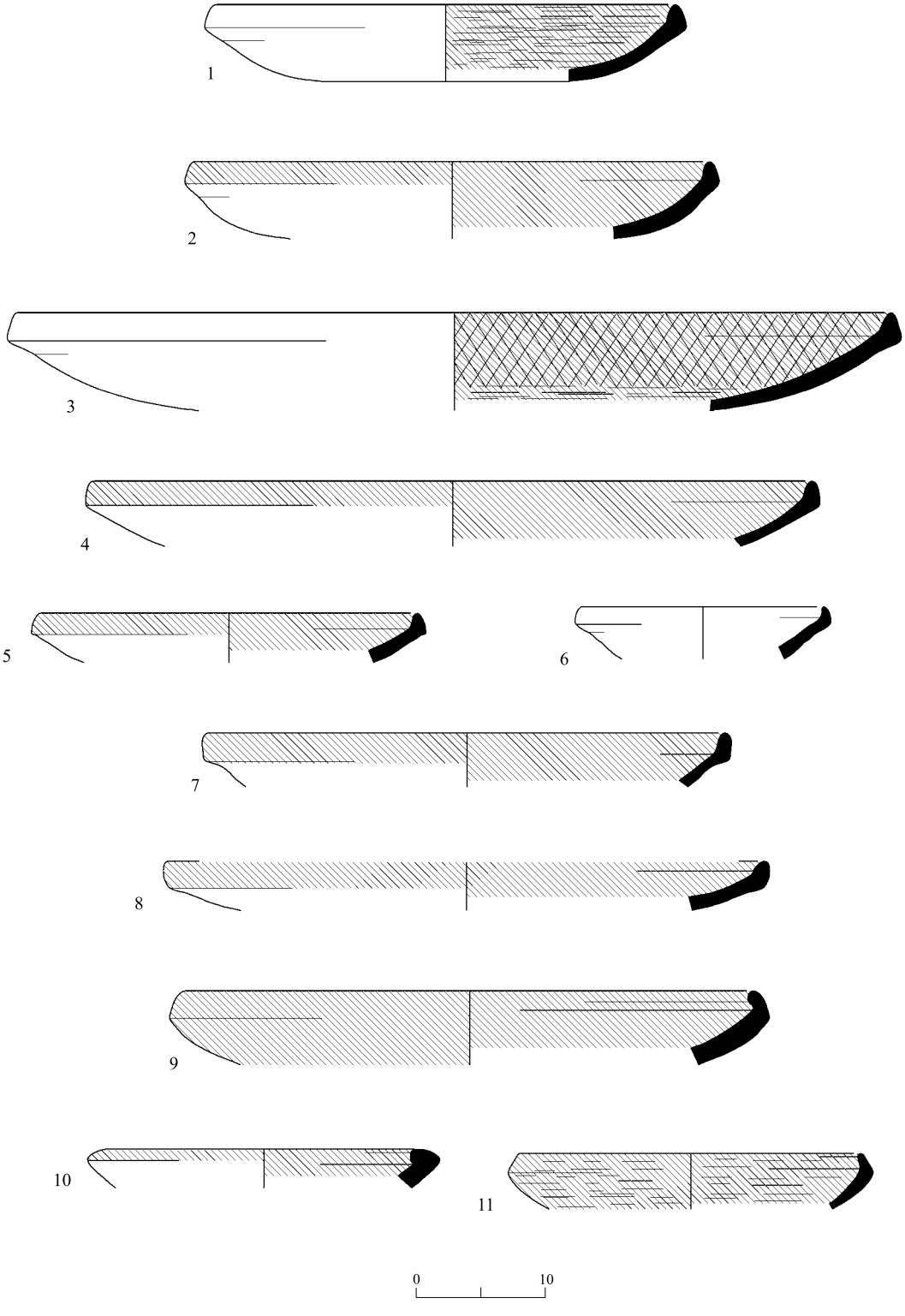

Fig. 18. Stratum II ceramics (EB III): platter-bowls and platters.

◂ Fig. 18

No.	Vessel	Locus	Reg. No.	Description
1	Platter-bowl	136	1091/3	Light brown clay; light brown-gray core; small white and gray grits; red wash and horizontal burnish on int.; very well-fired
2	Platter-bowl	136	1091/1	Light brown clay; light brown-gray core; small white and gray grits; red wash on int.; very well-fired
3	Platter	136	1085/12	Light brown clay; light gray core; small white and gray grits; red wash and patterned burnish on int.; very well-fired
4	Platter	126	1080	Light brown clay; light brown-gray core; small white and gray grits; red wash on int.; well-fired
5	Platter	141	1164/5	Light brown clay; light brown-gray core; small white and gray grits; red wash on int.; very well-fired
6	Platter	118	1074/1	Light brown clay; light brown-gray core; small white and gray grits; very well-fired
7	Platter	126	1085/9	Light brown clay; light brown-gray core; small white and gray grits; red wash on int.; very well-fired
8	Platter	122	1097/1	Light brown clay; light brown-gray core; small white and gray grits; thick red wash on int.; well-fired
9	Platter	122	1097/5	Light brown clay; light brown-gray core; small to medium white and gray grits; red wash on int. and ext.; very well-fired
10	Platter	141	1164/7	Light brown clay; brown core; small white and gray grits; red wash on int.; very well-fired
11	Platter	123	1160/2	Gray clay; gray core; small white and gray grits; red wash and horizontal burnish on int. and ext.; very well-fired

Fig. 19 ▸

No.	Vessel	Locus	Reg. No.	Description
1	Holemouth	136	1085/1	Light brown clay; light brown core; small to medium white and gray grits; well-fired
2	Holemouth	136	1085/2	Gray-brown clay; brown core; small white and gray grits; well-fired
3	Holemouth	129	1029	Gray-brown clay; dark gray core; small to medium white and gray grits; medium fired
4	Holemouth	123	1072	Gray-brown clay; gray core; small to medium white and gray grits; well-fired
5	Holemouth	118	1038	Gray-brown clay; gray core; small to medium white and gray grits; medium fired
6	Holemouth	136	1085/3	Light gray-brown clay; gray core; small to medium white and gray grits; very well-fired
7	Holemouth	124	1112	Gray-brown clay gray core; small white and gray grits; incised rectangle on shoulder; medium fired
8	Holemouth	141	1164/2	Gray-brown clay; dark gray core; small to medium white and gray grits; well-fired
9	Holemouth	118	1074/2	Gray-brown clay; dark gray core; small to medium white and gray grits; medium fired
10	Holemouth	123	1160	Gray-brown clay; gray core; small to medium white and gray grits; well-fired
11	Holemouth	118	1170	Gray-brown clay; gray core; small to medium white and gray grits; medium fired

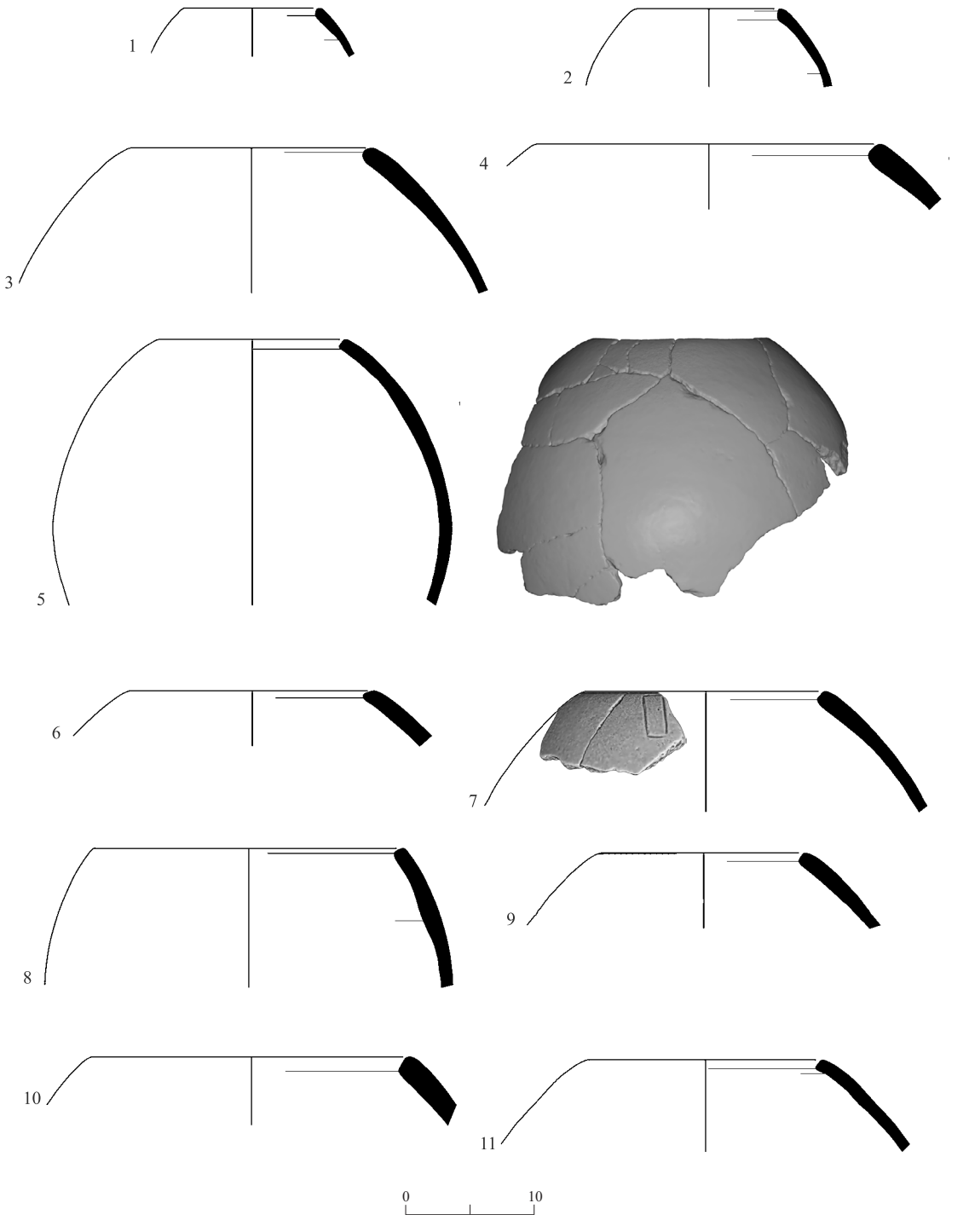

Fig. 19. Stratum II ceramics (EB III): holemouths.

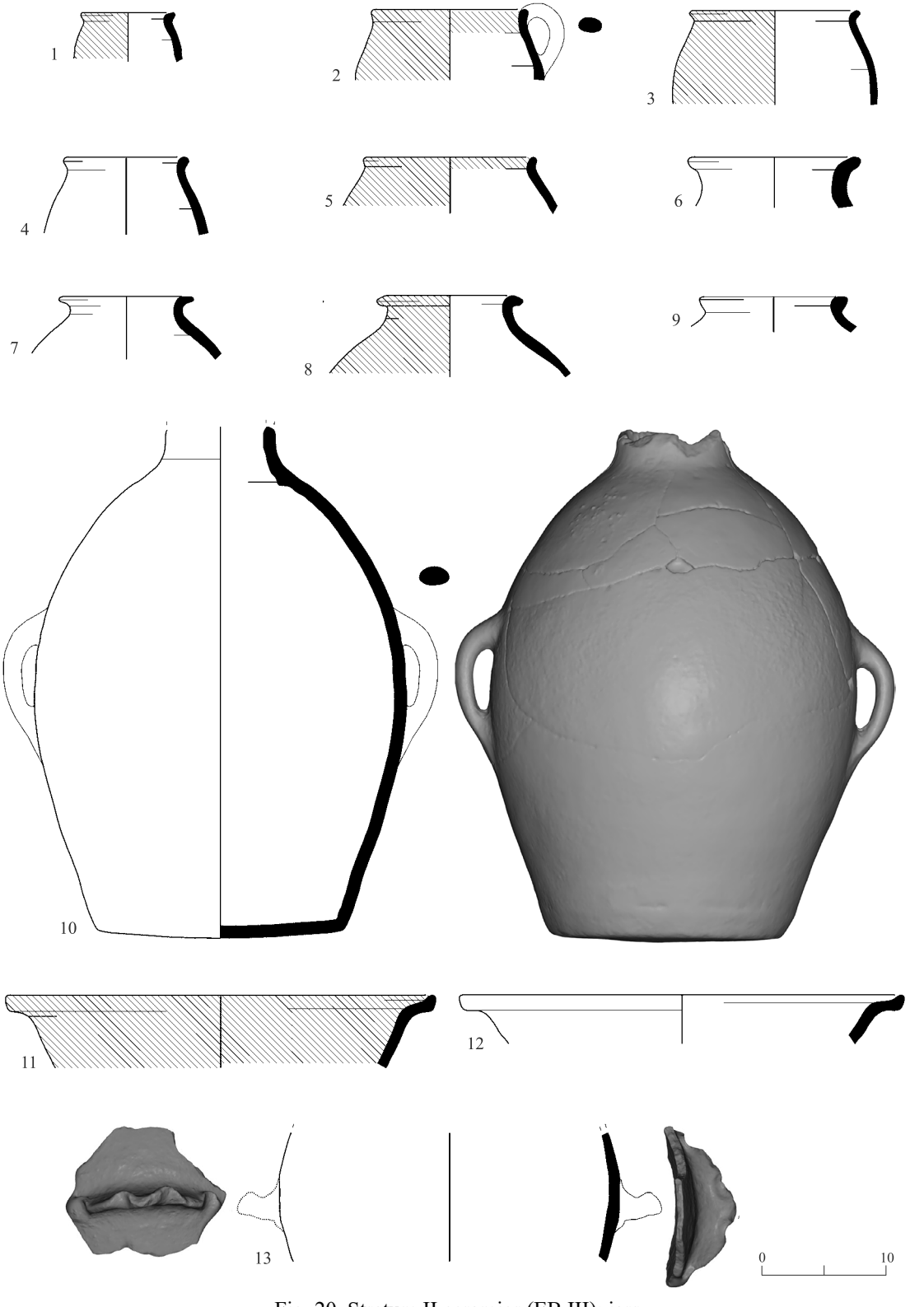

Fig. 20. Stratum II ceramics (EB III): jars.

◂ **Fig. 20**

No.	Vessel	Locus	Reg. No.	Description
1	Small jar	118	1065	Light brown clay; light brown-gray core; small white and gray grits; red wash on ext.; very well-fired
2	Small jar	141	1164/3	Light brown clay; light brown-gray core; small white and gray grits; very well-fired
3	Small jar	124	1062	Light brown clay; light brown-gray core; small white and gray grits; red wash on ext.; well-fired
4	Small jar	136	1085/5	Light brown clay; light brown-gray core; small white and gray grits; red wash on ext.; very well-fired
5	Small jar	118	1090/1	Light brown clay; light brown-gray core; small white and gray grits; red wash on ext.; well-fired
6	Storage jar	126	1086	Light brown clay; light brown core; small white and gray grits; very well-fired
7	Storage jar	141	1153	Brown clay; brown core; small white and gray grits; very well-fired
8	Storage jar	136	1085	Light brown clay; light brown-gray core; small white and gray grits; red wash on ext.; very well-fired
9	Storage jar	123	1160/1	Light brown clay; brown-gray core; small white grits; well-fired; Egyptian(?)
10	Storage jar	141	1130	Light brown clay; light brown-gray core; small white and gray grits; very well-fired
11	Storage jar	126	1080/1	Light brown clay; light brown-gray core; small white and gray grits; red wash on ext.; very well-fired
12	Storage jar	126	1064/1	Light brown clay; light brown-gray core; small white and gray grits; very well-fired
13	Storage jar	133	1116	Light brown clay; light gray core; small white and gray grits; very well-fired

Periods C and D at Tel Bet Yeraḥ (Greenberg 2014: Figs. 3.46:1–7, 11, 12, 14; 3.61:2–4, 7). This is also the case with channeled-rim storage jars (Esse 1991:47, 50, Pls. 1:H; 4:J; Getzov 2006: Fig. 3.48:7), although the two examples from the present excavation represent a much larger form with a wider mouth than the storage jars of this type found previously at the site, and may be described more appropriately as pithoi.

The material of Strata II–I yielded a relatively large number of jugs, including complete vessels overlying the surfaces, and one complete amphoriskos decorated with red wash from Stratum II (Figs. 21; 23:9–11). Some of the jugs have a flat base and vestigial vertical handles (Figs. 16:5; 21:6; 23:9, 10), representing a continuation of earlier EB II forms of NCMW, while others have a more constricted stump-like base and often bear a vertical burnish (Fig. 21:2, 4, 5), generally indicative of EB III. A handmade votive juglet decorated with red wash (Fig. 21:7) from Stratum II was previously found in both EB II (Getzov 2006: Fig. 3.44:1) and EB III (Greenberg 2014:87) layers at Tel Bet Yeraḥ, as is the case with the abovementioned amphoriskos, uncovered both in Period C (Greenberg 2014:87) and Period D (Getzov 2006: Fig. 3.49:9).

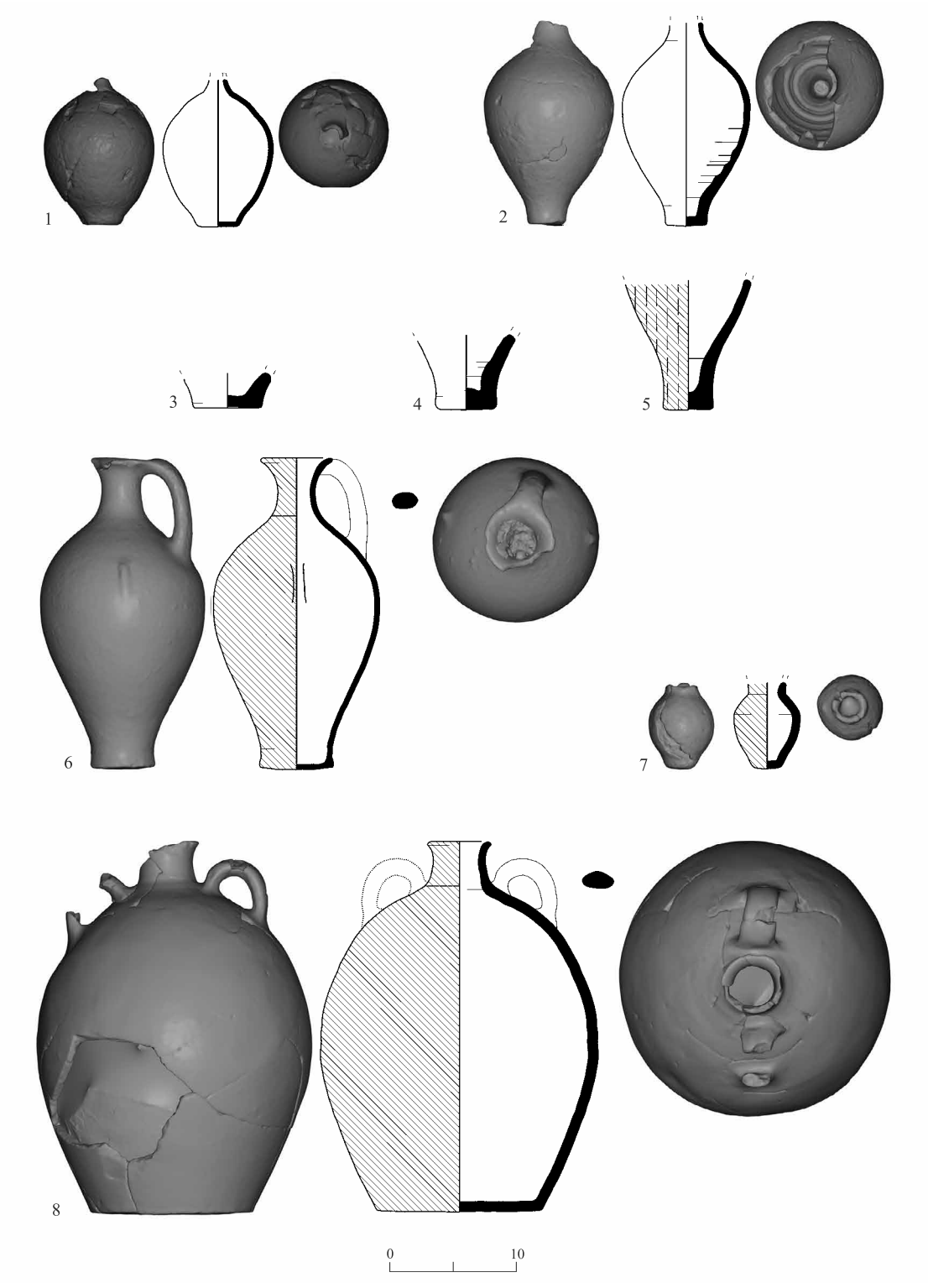

Fig. 21. Stratum II ceramics (EB III): jugs, juglet and amphoriskos.

◂ **Fig. 21**

No.	Vessel	Locus	Reg. No.	Description
1	Jug	128	1069	Brown-orange clay; brown-orange core; small white and gray grits; very well-fired
2	Jug	118	1055	Light brown clay; light brown-gray core; small white and gray grits; very well-fired
3	Jug	141	1166/3	Brown clay; brown core; small white and gray grits; very well-fired; soot marks on broken edge
4	Jug	136	1085/7	Light brown clay; light brown core; small white and gray grits; very well-fired
5	Jug	118	1065/1	Light brown clay; light brown core; small white and gray grits; red wash and vertical burnish on ext.; very well-fired
6	Jug	118	1054	Light brown clay; light brown-gray core; small white and gray grits; vestigial vertical handle; red wash on ext.; very well-fired
7	Juglet	121	1148	Light brown clay; light brown-gray core; small white and gray grits; red wash on ext.; poorly fired
8	Amphoriskos	118	1090	Light brown clay; light brown-gray core; small white and gray grits; red wash on ext.; very well-fired

Fig. 22 ▸

No.	Vessel	Locus	Reg. No.	Description
1	Bowl	116	1047	Brown clay; light brown core; small white grits; red wash on ext. and int.; very well-fired
2	Bowl	110	1021/1	Light brown clay; light brown core; small white and gray grits; well-fired
3	Bowl	107	1016/1	Light brown clay; light brown core; small white and gray grits; very well-fired
4	Platter-bowl	107	1016	Light brown clay; light brown core; small white and gray grits; very well-fired
5	Platter-bowl	117	1036	Light brown clay; light brown core; small white and gray grits; very well-fired
6	Platter-bowl	116	1034	Light brown clay; light brown core; small white and gray grits; well-fired
7	Platter-bowl	108	1051	Light brown clay; gray core; small to medium white and gray grits; very well-fired
8	Platter-bowl	110	1032/3	Light buff clay; light buff core; small white and gray grits; very well-fired
9	Platter	116	1034/1	Dark gray clay; dark gray; small white and gray grits; very well-fired
10	Platter	116	1056/1	Light brown clay; light brown core; small white and gray grits; very well-fired
11	Platter	110	1021	Light brown clay; light brown core; small white and gray grits; partial wash on ext.; very well-fired
12	Platter	110	1032/2	Light brown clay; gray core; small to medium white and gray grits; patterned burnish on ext.; very well-fired

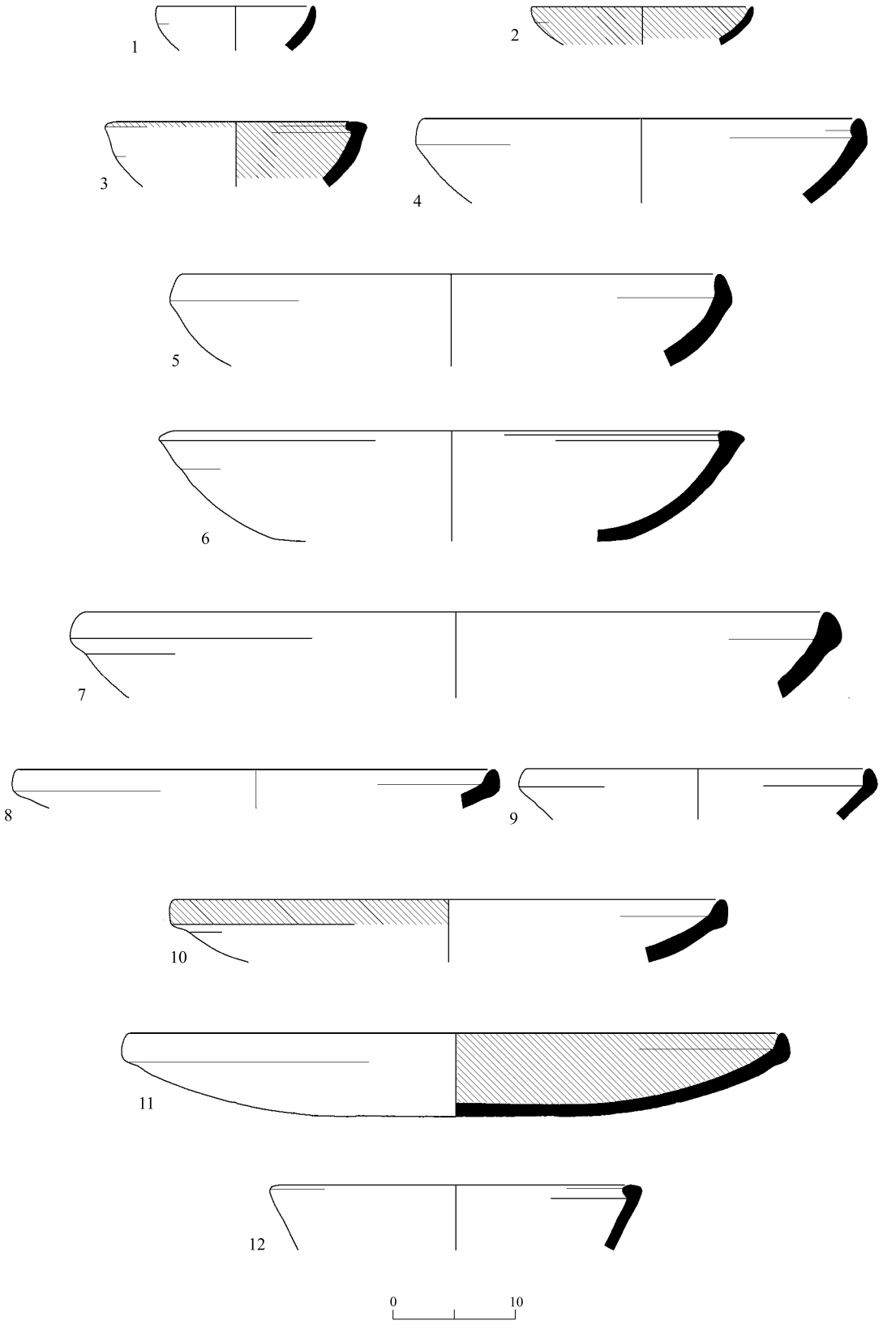

Fig. 22. Stratum I ceramics (EB III): bowls, platter-bowls and platters.

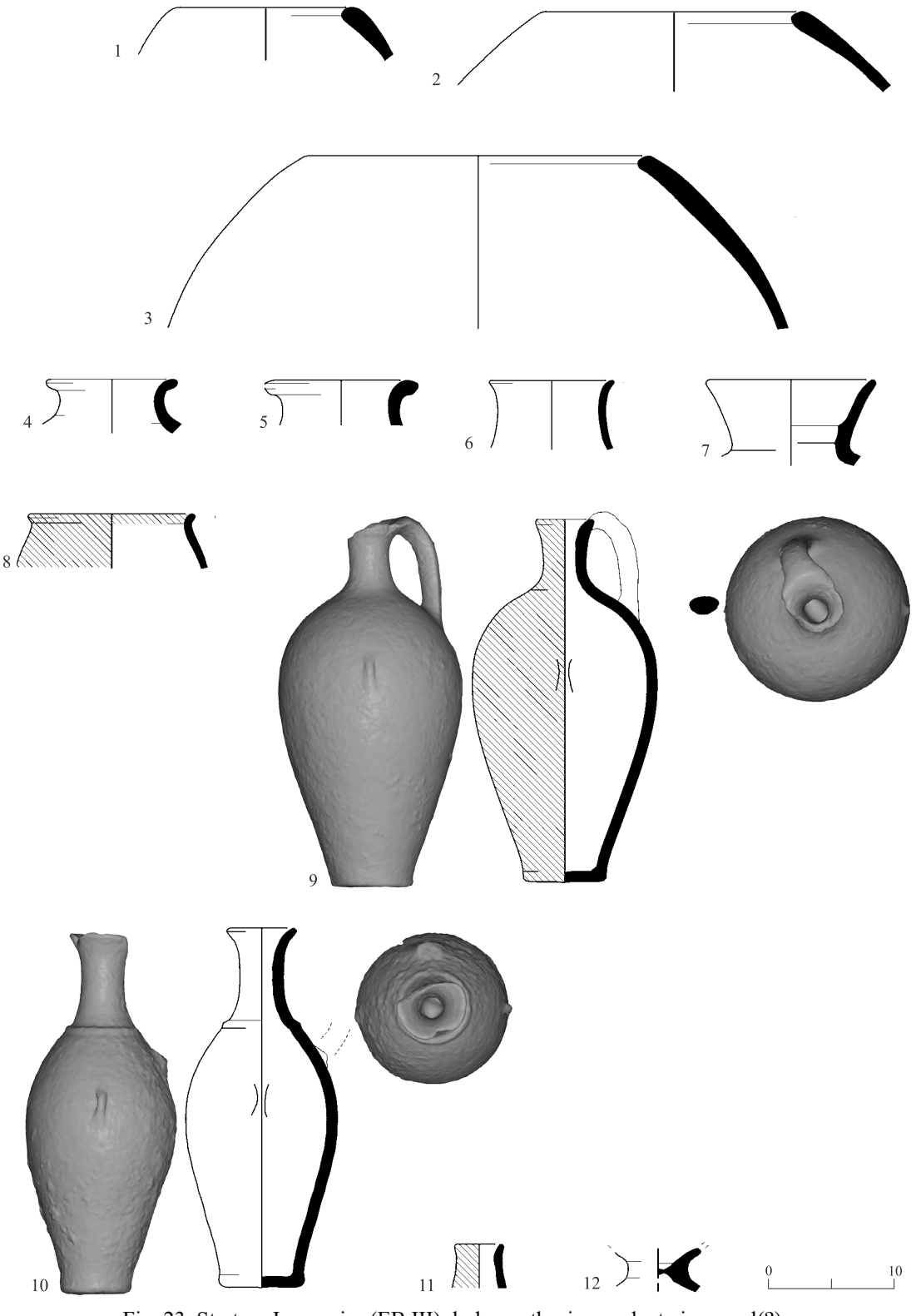

Fig. 23. Stratum I ceramics (EB III): holemouths, jars and a twin vessel(?).

◂ **Fig. 23**

No.	Vessel	Locus	Reg. No.	Description
1	Holemouth	108	1093	Light brown clay; brown-gray core; small white and gray grits; very well-fired
2	Holemouth	110	1032	Brown clay; gray core; small to medium white and gray grits; medium fired
3	Holemouth	112	1053	Brown clay; dark gray core; small to medium white and gray grits; medium fired
4	Storage jar	116	1056	Light brown clay; light brown core; small white and gray grits; very well-fired
5	Storage jar	107	1016/3	Light brown clay; light brown core; small white and gray grits; very well-fired
6	Storage jar	112	1024	Brown-orange clay; brown-orange core; small white and gray grits; very well-fired
7	Storage jar	116	1060	Brown clay; light brown core; small white and gray grits; very well-fired
8	Storage jar	116	1037	Light brown clay; light brown core; small white and gray grits; red wash on ext.; medium fired
9	Jar	108	1057	Light brown clay; light brown-gray core; small white and gray grits; vestigial handle; red wash on ext.; very well-fired
10	Jar	108	1025	Light brown clay; light brown-gray core; small white and gray grits; vestigial handle; very well-fired
11	Jar	116	1060/1	Brown-orange clay; brown-orange core; small white and gray grits; red wash on ext.; very well-fired
12	Twin vessel(?)	108	1019	Light brown clay; light brown core; small white and gray grits; very well-fired

SUMMARY AND CONCLUSIONS

The excavation in Area AG near the southwestern fringes of Tel Bet Yeraḥ largely yielded findings that correspond closely to those of previous excavations at the site. The exposed stratigraphy in this part of the site indicates that occupation here began in the very late EB I (Stratum V) and was immediately followed by occupations of EB II (Stratum IV) and EB III (Strata III–I), although the pottery of Stratum III may be dated to a time span between late EB II and early EB III. The remains of Strata III–I indicate more intensive occupation of this part of the site than in the preceding periods. The direct superposition of all strata, often reusing portions of earlier architectural elements, suggests a minimal time interval between the successive occupations and a nearly continuous habitation from the very end of EB I well into EB III. This part of the site appears to have been finally abandoned in EB III as no stratified architectural remains from later periods were found.

The remains exposed in Area AG are relatively sparse, indicating that this area was used primarily for domestic purposes. This conclusion is reinforced by the presence of a large quantity of holemouth vessels, presumably used as cooking pots, found in all the strata

and most of the excavation loci. The nature of domestic activities in this area, comprising the preparation and consumption of food and beverage, is illustrated by the large number of relatively complete ceramic vessels uncovered atop Surface 118: two holemouths, two jugs and an amphoriskos. That such activities took place in Area AG is also indicated by other finds from the excavation, consisting of the fauna (see Pines, this volume), the flint assemblage (see Shemer, this volume), the groundstone assemblage (see Haklay and Milevski, this volume) and the molluscs (see Ktalav, this volume).

Appendix 1. Locus Register

Locus	Square	Locus Above	Locus Below[i]	Description	Stratum
100	C5		105	Topsoil and mixed debris	
101	B5		104	Topsoil and mixed debris	
102	C4		106	Topsoil and mixed debris	
103	B4		107	Topsoil and mixed debris	
104	B5	101	108	Debris above beaten-earth surface	I(?)
105	C5	100	109	Debris above beaten-earth surface	I(?)
106	C4	102	111, 126	Debris above beaten-earth surface and mixed debris	I(?)
107	B4	103	110	Combined with L117	I
108	B5	104	116	Debris upon beaten-earth surface	I
109	C5	105	125, 127	Debris above beaten-earth surface and mixed debris	I(?)
110	B4	107	112, 117	Debris upon beaten-earth surface west of W200	I
111	C4	106	115	Mixed debris	I(?)
112	B4	110	122	Surface make-up	I–II
113	B4	107	123	Debris upon beaten-earth surface east of W200	I
114	B4	107	117	Combined with L117	I
115	C4	111	121	Debris above beaten-earth surface	II(?)
116	B5	108	118	Surface make-up	I–II
117	B4	107	136	Debris upon beaten-earth surface west of W200	I
118	B5	116	133	Debris upon beaten-earth surface	II
119	D5		N/E	Topsoil and mixed debris	
120	D4		149	Topsoil and mixed debris	
121	C4	115	131	Debris upon beaten-earth surface east of W204	II
122	B4	112, 136	124, 129	Debris upon beaten-earth surface west of W205	II
123	B4/C4	113	141	Debris upon beaten-earth surface east of W205	II
124	B4	122	129	Surface make-up	II
125	C5	109	135	Debris above beaten-earth surface	II(?)
126	C4	106	141	Debris upon beaten-earth surface west of W204	II
127	C5	109	130	Debris above beaten-earth surface	II(?)
128	C4	121	138	Combined with L131	III
129	B4	122	132	Combined with L124	II

[i] N/E = not excavated.

APPENDIX 1. (cont.)

Locus	Square	Locus Above	Locus Below[i]	Description	Stratum
130	C5	127	139	Debris above beaten-earth surface	II(?)
131	C4	121	138	Debris upon beaten-earth surface and surface make-up	III
132	B4	129	142, 151	Debris upon beaten-earth surface	III
133	B5	118	134	Surface make-up	II–III
134	B5	133	148	Debris upon beaten-earth surface	IV
135	C5	125	137	Debris above beaten-earth surface and upon W210	II(?)
136	B4	117	129	Combined with L122	II
137	C5	135	144	Debris north of W210	II(?)
138	C4	131	146, 156	Debris upon beaten-earth surface north of W215	IV
139	C5	130	147	Debris upon beaten-earth surface	III
140	C4/B4	126	141	Surface make-up west of W204	II
141	C4/B4	140	160	Debris upon beaten-earth surface west of W204	II
142	B4	132	143	Debris upon beaten-earth surface (= L155)	IV
143	B4	143	N/E	Surface make-up and probe into sterile marl	IV
144	C5	137	145	Debris upon beaten-earth surface	III
145	C5	144	152	Surface make-up atop W213	III–IV
146	C4	138	153	Debris upon beaten-earth surface north of W212	V
147	C5	139	150, 158, 159	Surface make-up(?)	III–IV
148	B5	134	N/E	Surface make-up below W207	IV
149	D4	120	N/E	Debris below topsoil	I–II(?)
150	C5	147	N/E	Combined with L159	IV
151	B4	132	154, 155	Surface make-up atop W214	III
152	C5	145	N/E	Debris upon beaten-earth surface west of W216	IV
153	C4	146		Surface make-up and exposure of sterile basal level	V
154	B4	151	N/E	Debris upon beaten-earth surface(?) south of W214	IV
155	B4	151	N/E	Debris upon beaten-earth surface south of W214 (= L142)	IV
156	C4/C5	138	157	Debris upon beaten-earth surface north of W215	IV
157	C4/C5	156	N/E	Surface make-up	IV–V
158	C5	147	N/E	Debris upon beaten-earth surface east of W216	IV
159	C5	147	161	Debris upon beaten-earth surface west of W216	IV
160	C4/B4	141	162	Surface make-up	II–III
161	C5	159	N/E	Surface make-up down to base of W212	IV–V
162	C4/B4	160	N/E	Debris adjacent to W212 and W213	III–V
163	C5/B5		N/E	Debris buildup in alleyway between W209 and W206	II–I

Appendix 2. Wall Register

Wall	Square	Material	Stratigraphic Attribution	Associated Surfaces
200	B4	Stone	I	L110, L113
201	C5	Stone	II	L130?
202	B4	Stone	I	L117, L113
203	B5	Stone	II	L118
204	C4	Mud brick on stone	III–II	L121, L126, L131, L141
205	B4	Stone	II	L123
206	C5	Stone	II	L163
207	B5	Stone	IV	L134/148
208	B5	Stone	II	L118
209	B5, B4/B5	Stone	II	L118, L163
210	C5	Mud brick	II	
211	Cancelled			
212	C4	Stone	V	L146
213	C5	Stone	IV	L152, L159
214	B4, C4	Mud brick	IV	L154, L155
215	C4/C5	Mud brick	IV	L158, L159, L156
216	C5	Mud brick	IV	L158, L159
217	B4	Stone	I	L110, L139

References

Beck P. 1985. An Early Bronze Age "Family" of Bowls from Tel Aphek. *Tel Aviv* 12:17–28.

Dooijes R. and Nieuwenhuyse O.P. 2009. Ancient Repairs in Archaeological Research: A Near Eastern Perspective. In J. Ambers, C. Higgitt, L. Harrison and D. Saunders eds. *Holding It All Together: Ancient and Modern Approaches to Joining, Repair and Consolidation.* London. Pp. 8–12.

Esse D.L. 1982. *Beyond Subsistence: Beth Yerah and Northern Palestine in the Early Bronze Age.* Ph.D. diss. University of Chicago. Chicago.

Esse D.L. 1991. *Subsistence, Trade and Social Change in Early Bronze Age Palestine* (SAOC 50). Chicago.

Getzov N. 2006. *The Tel Bet Yeraḥ Excavations, 1994–1995* (IAA Reports 28). Jerusalem.

Golani. A. 2003. *Salvage Excavations at the Early Bronze Age Site of Qiryat Ata* (IAA Reports 18). Jerusalem.

Golani A. 2016. Tel Bet Yeraḥ. *HA–ESI* 128 (December 21). http://www.hadashot-esi.org.il/report_detail_eng.aspx?id=25139&mag_id=124 (accessed January 3, 2018).

Greenberg R. 1996. The Early Bronze Levels. In A. Biran, D. Ilan and R. Greenberg. *Dan* I: *A Chronicle of the Excavations, the Pottery Neolithic, the Early Bronze Age and the Middle Bronze Age Tombs* (ANGSBA VI). Jerusalem. Pp. 83–160.

Greenberg R. 2000. Changes in Ceramic Production between Early Bronze Age II and III in Northern Israel, Based on the Pottery of Tel Hazor and Tel Dan. In G. Philip and D. Baird eds. *Ceramics and Change in the Early Bronze Age of the Southern Levant* (Levantine Archaeology 2). Sheffield. Pp. 183–199.

Greenberg R. 2014. *Bet Yeraḥ: The Early Bronze Age Mound* II: *Urban Structure and Material Culture 1933–1986 Excavations* (IAA Reports 54). Jerusalem.

Greenberg R. and Eisenberg E. 2002. Egypt, Bet Yeraḥ and Early Canaanite Urbanization. In E.C.M. van den Brink and T.E. Levy eds. *Egypt and the Levant: Interrelations from the 4th through the Early 3rd Millennium B.C.E.* London–New York. Pp. 213–222.

Greenberg R. and Iserlis M. 2014. The Early Bronze Age Pottery Industries. In R. Greenberg. *Bet Yeraḥ; The Early Bronze Age Mound* II: *Urban Structure and Material Culture, 1933–1986 Excavations* (IAA Reports 54). Jerusalem. Pp. 53–150.

Greenberg R. and Porat N. 1996. A Third Millennium Levantine Pottery Production Center: Typology, Petrography and Provenance of the Metallic Ware of Northern Israel and Adjacent Regions. *BASOR* 301:5–24.

Greenberg R., Eisenberg E., Paz S. and Paz Y. 2006. *Bet Yeraḥ; The Early Bronze Age Mound* I: *Excavation Reports, 1933–1986* (IAA Reports 30). Jerusalem.

Greenberg R., Tal O. and Da‘adli T. 2017. *Bet Yeraḥ* III: *Hellenistic Philoteria and Islamic al-Ṣinnabra; The 1933–1986 and 2007–2013 Excavations* (IAA Reports 61). Jerusalem.

Haklay G. and Milevski I. This volume. The Ground Stone Tools from Tel Bet Yeraḥ.

Knudsen N. This volume. A Ceramic Zoomorphic Figurine from Tel Beth Yeraḥ.

Ktalav I. This volume. The Mollusks from Tel Bet Yeraḥ.

Paz Y. and Iserlis M. 2009. Golanite Production and Distribution Center of Cooking Pots during the Early Bronze Age II. In S.A. Rosen and V. Roux eds. *Techniques and People: Anthropological Perspectives on Technology in the Archaeology of the Proto-Historic and Early Historic Periods in the Southern Levant* (Mémoires et travaux du Centre de recherches préhistoriques français de Jérusalem 9). Paris. Pp. 99–110.

Petrie W.M.F. 1921. *Corpus of Prehistoric Pottery and Palettes* (BSAE XXIII). London.

Pines M. This volume. The Fauna from Tel Bet Yeraḥ.

Shemer M. This volume. The Flint Assemblage from Tel Bet Yeraḥ.

Zuckerman S. 2003. The Early Bronze Age II–III Pottery. In A. Ben-Tor, R. Bonfil and S. Zuckerman. *Tel Qashish: A Village in the Jezreel Valley; Final Report of the Archaeological Excavations (1978–1987)* (Qedem Reports 5). Jerusalem. Pp. 130–160.