'Atiqot 109, 2022

The Glass Vessels from the Hellenistic–Byzantine-Period Rural Settlement at el-Khirba, Shoham

Shulamit Hadad

One complete glass bottle and many fragments of other glass vessels were found in the excavations at el-Khirba, Shoham (see Sion, this volume), thirty-eight of which are presented below. The most striking find is a core-formed amphoriskos fragment dated to the late seventh–sixth centuries BCE, while the pottery (see Rapuano, this volume) dates from the Hellenistic through the Byzantine periods; most of the coins date from the fourth century CE, a few from the first–third centuries CE, and a very small number from the Hellenistic period (the fourth century BCE; see Ariel, this volume). The glass assemblage is composed of cast ribbed bowl fragments (not illustrated) and blown vessels dating from the Early Roman through the Byzantine periods, their majority dating to the third–fourth centuries CE.

The vessels are presented below according to their manufacturing technique, first the core-formed fragment and then the blown glass vessels in typological order.

Core-Formed Vessel (Late Seventh–Sixth Centuries BCE)

Amphoriskos (Fig. 1:1).— The vessel is made of blue glass while the rim is yellow. Only a small part of the rim was preserved. This amphoriskos belongs to the Mediterranean core-formed vessels Group I, dated by Grose (1989:109–115) to the sixth–fifth centuries BCE. According to Barag (1970:196–197, n. 231), amphoriskoi of this type made their first appearance in the second half of the seventh century BCE, probably toward the end of the century. Two of the amphoriskoi mentioned by Barag were discovered in tombs at Bet She'an and Meqabelein in Jordan; both are made of blue glass and dated to the late seventh or sixth century BCE.

The amphoriskos was found with coins dated to the fourth century CE, while, as mentioned above, the earliest pottery and coins found at the site are dated to the fourth century BCE. The large time gap between the amphoriskos' date and the other finds at the site may be explained by the existence of a non-represented earlier level, meaning that this amphoriskos was found out of context.

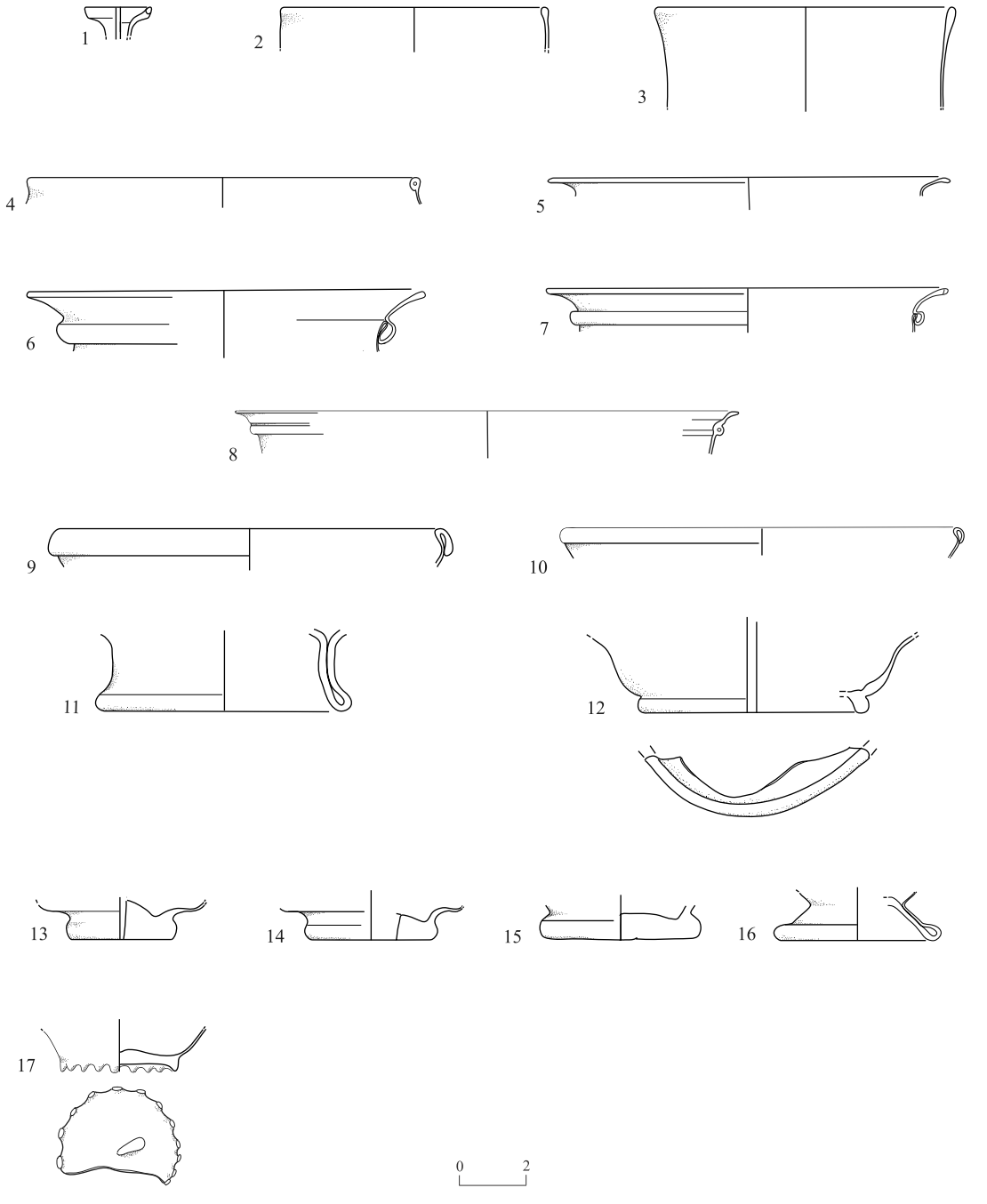

Fig. 1. Glass vessels: amphoriskos, bowl and beakers.

◂ **Fig. 1**

No.	Vessel	Locus	Reg. No.	Color
1	Amphoriskos	1083	2387/1	Blue; yellow rim
2	Bowl	1083	2387/2	Dark bluish green
3	Bowl	1223	2452/1	Light bluish green
4	Bowl	1253	2532	Unknown; patina
5	Bowl	1253	2619	Light bluish green
6	Bowl	1050	2334	Light bluish green; turquoise thread on rim
7	Bowl	1091	1501/1	Light bluish green
8	Bowl	1066	2370	Unknown; patina
9	Bowl	1050	2312	Light bluish green
10	Bowl	1091	1501/2	Light bluish green
11	Bowl	1296	2679	Light green
12	Bowl	W261	2669	Dark bluish green
13	Beaker	1091	1501/3	Light bluish green
14	Beaker	1232	2620	Light bluish green
15	Beaker	1266	2565/1	Light bluish green
16	Beaker	1230	2588/1	Light green
17	Beaker	1040	2145	Unknown; patina

Blown Vessels (Early Roman–Byzantine Periods)

Bowls (Fig. 1:2–12).— Bowl Nos. 2–4 have a simple rounded rim; in bowl No. 3 the rim is slightly flaring, and in bowl No. 4 it is thickened. Bowl No. 5 has a flaring rim. Bowls Fig. 1:6, 7 have a double fold beneath the rim. Bowl No. 6 is made of light bluish-green glass and has a turquoise thread on the rim. Large bowl No. 8 has a flaring rim and a ridge underneath it. Bowl Nos. 9, 10 have a folded-out rim. Two bases were found: the high ring base of bowl No. 11, and the low ring base and part of the rounded wall of bowl No. 12. All the bowls are made of light and dark bluish green and light green glass; the color of bowl No. 8 is unknown due to patina.

Many bowls in various shapes with a double fold beneath the rim were discovered at Khirbat el-Ni‘ana, where they were dated to the fourth century CE and considered a local on-site production (Gorin-Rosen and Katsnelson 2007:81–83, and see discussion and many parallels therein). Such bowls were also found at Caesarea and dated to the fourth–fifth centuries CE (Israeli 2008:376–377, Nos. 84, 85), and in Beirut, dated to 450–500 CE (Jennings 2004–2005:106, Fig. 5.19:4).

Beakers (Fig. 1:13–17).— Only the bases of various shapes were preserved. Beaker Nos. 13–15 have a flat disc base; No. 13 is thick. Beaker No. 16 has a high ring base. Beaker No. 17 has a unique base with small legs made by pinching the glass while hot; the base is not complete and has a pontil mark in its center. All the beakers are made of light bluish-green and light green glass. The color of beaker No. 17 could not be determined due to patina.

Beakers with a disc base were discovered at Khirbat el-Ni‘ana and dated to the fourth–early fifth centuries CE (Gorin-Rosen and Katsnelson 2007:93, Fig. 8:3–9), where there are considered a local production, and at Caesarea (Israeli 2008:377–378, Nos. 91–93). Beakers with a high ring base such as No. 16 were found at Khirbat el-Ni‘ana (Gorin-Rosen and Katsnelson 2007:93, Fig. 8:11–15, and see other parallels therein), and parallels to beaker No. 17 were uncovered at Caesarea (Israeli 2008:378–379, Nos. 100–102, defined as flasks).

Plain Bottles (Fig. 2:18–27).— Bottle No. 18 has a narrow neck and a flat rim. Bottle Nos. 19–21 have a funnel-shaped rim; No. 19 is complete and has a folded-in rim and a rounded body with a flat base. Bottle Nos. 20, 21 have a neck constricted near the shoulder. They differ in their rims: the former has a folded-in rim, while the latter has a a rounded rim with a ridge underneath. Bottle Nos. 22–24 show a thickened rounded rim. Bottle Nos. 25, 26 have a flaring rim; the latter has a ridge beneath the rim. Of bottle No. 27 only the rounded base was preserved; this type of base is uncommon.

The bottles are made of light bluish-green and light green glass. In three bottles (Fig. 2:22, 24, 27) the color could not be determined due to patina.

Bottles with a constricted neck were discovered at Khirbat el-Ni‘ana and are considered a local production. According to Gorin-Rosen and Katsnelson (2007:95–98, Fig. 10:1–7), this type of bottle is common in the Near East in the Late Roman period.

Fig. 2 ▸

No.	Locus	Reg. No.	Color
18	1230	2588/2	Light green
19	1299	2662	Light bluish green
20	W1	110	Light bluish green
21	1256	2666	Light bluish green
22	1230	2578	Unknown; patina
23	1091	1501/4	Very light bluish green
24	1062	2893	Unknown; patina
25	1056	2262/1	Very light bluish green
26	1083	2387/3	Light bluish green
27	1083	2387/4	Unknown; patina
28	1266	2565/2	Light bluish green
29	1274	2630	Light bluish green
30	1091	1501/5	Light bluish green
31	1223	2452/2	Light bluish green
32	1265	2568	Very light bluish green; thin turquoise thread
33	1230	2588/3	Very light bluish green; thin turquoise thread

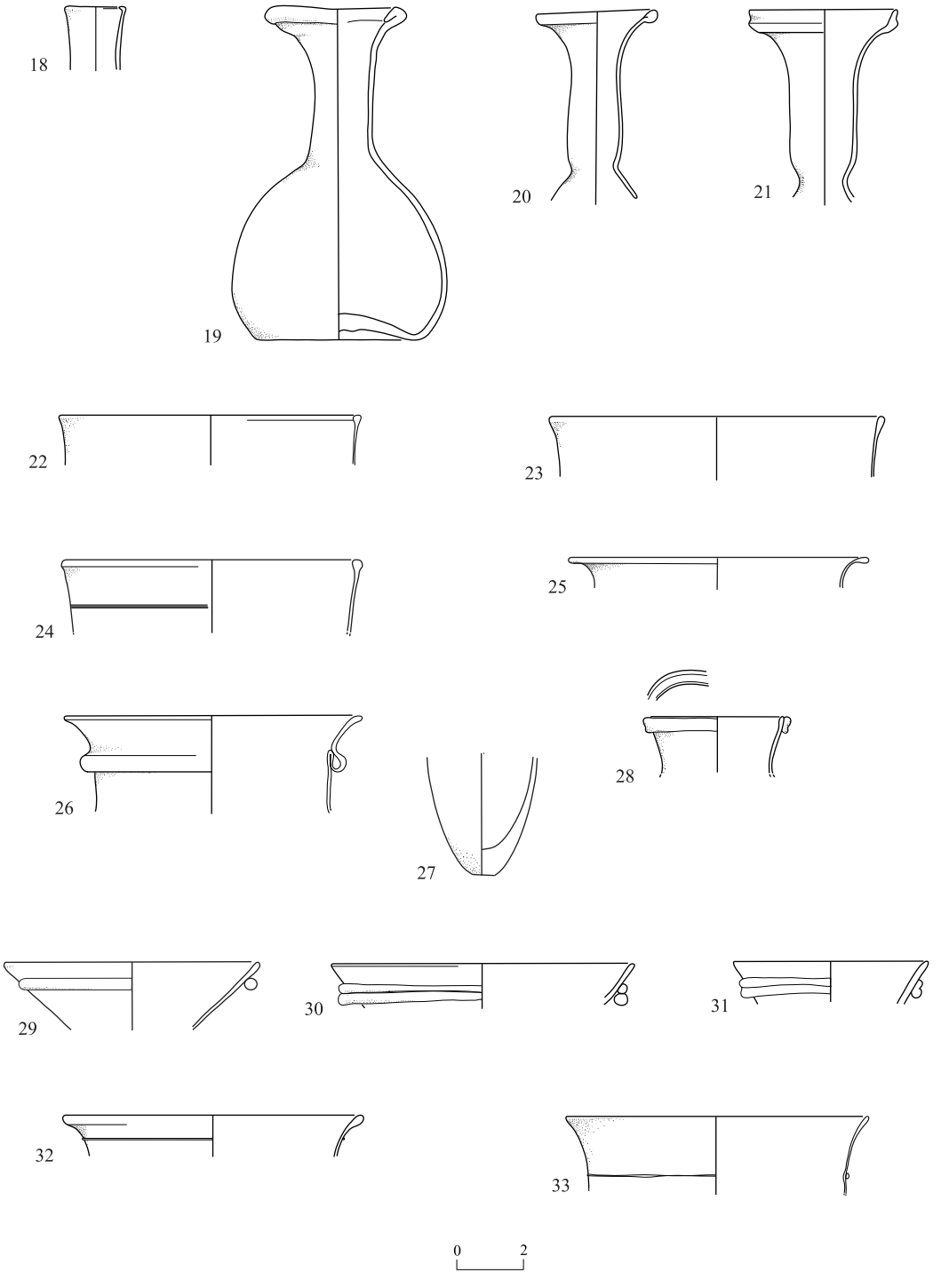

Fig. 2. Glass bottles.

Bottles Decorated with Threads (Fig. 2:28–33).— The only decoration exhibited on the vessels at the site is the thread decoration. Bottle No. 28 is adorned with one thread on the rim. Bottle Nos. 29–31 are decorated with one (No. 29) or two (Nos. 30, 31) thick threads below the rim. Both the bottles and the threads are made of light bluish-green glass. Bottle Nos. 32, 33 are made of very light bluish-green glass and decorated with a thin turquoise thread.

Bottles decorated with threads from contexts dating to the Late Roman–Byzantine periods were found, for example, at Tel Bet She'an (Hadad 2006:627, Nos. 40–47, and see other parallels therein), Khirbat el-Ni'ana (Gorin-Rosen and Katsnelson 2007:100–103, Fig. 13) and Beirut (Jennings 2004–2005:159–168).

Varia

Jug (Fig. 3:34).— Only part of the thick wide ribbed handle of a jug was preserved, made of dark bluish-green glass. This type of jug is typical of the Early Roman period, parallel to Isings Form 51a (1957:67–68). Jugs with this type of handle were found in graves in Netanya, dated from the end of the first to the late third centuries CE (Jackson-Tal 2004:146–147, Nos. 9–10, the former is complete) and in a burial cave at Ha-Gosherim, dated from the mid-first century BCE to the second half of the first century CE (Ovadiah 1999:41*, 43*–44*, Fig. 4:1, the jug is complete).

The jug was found in L1253 alongside bowls (Fig. 1:4, 5) and a cast ribbed bowl fragment (not illustrated). Cast ribbed bowls are dated by Grose (1979:61–63, Group C; 1989:194–195) to the second quarter of the first century BCE–end of the first century CE. The pottery found in this locus is dated to the first–second centuries CE and the coins, to the first–fourth centuries CE. The jug should apparently be dated, like the pottery, to the first–second centuries CE.

Handle (Fig. 3:35).— This partially preserved handle, made of light bluish-green glass, probably belonged to a lamp. Similar handles were discovered in the Byzantine shops at Beth She'an, dated to the fifth–early sixth centuries CE, though they may have continued until the end of the Byzantine period (Hadad 2002:490, Nos. 33–39); at Khirbat el-Ni'ana, dated to the Byzantine period (Gorin-Rosen and Katsnelson 2007:114–115, Fig. 22:3); and at the Nesher-Ramla Quarry (Hadad 2010:191, Pl. 14.3:1–6) and Beirut (Jennings 2004–2005:150–152).

Bracelet (Fig. 3:36).— This bracelet is made of opaque black glass with a horizontal incision running in its middle. The bracelet has parallels in Spaer's Type B,4a, dated to the Byzantine period (Spaer 1988:57).

Bead (Fig. 3:37).— A bead made of yellowish-green faience with longitudinal grooves that produce a flower-shaped section. The bead was found with pottery (L1093) dated to the third–second centuries BCE.

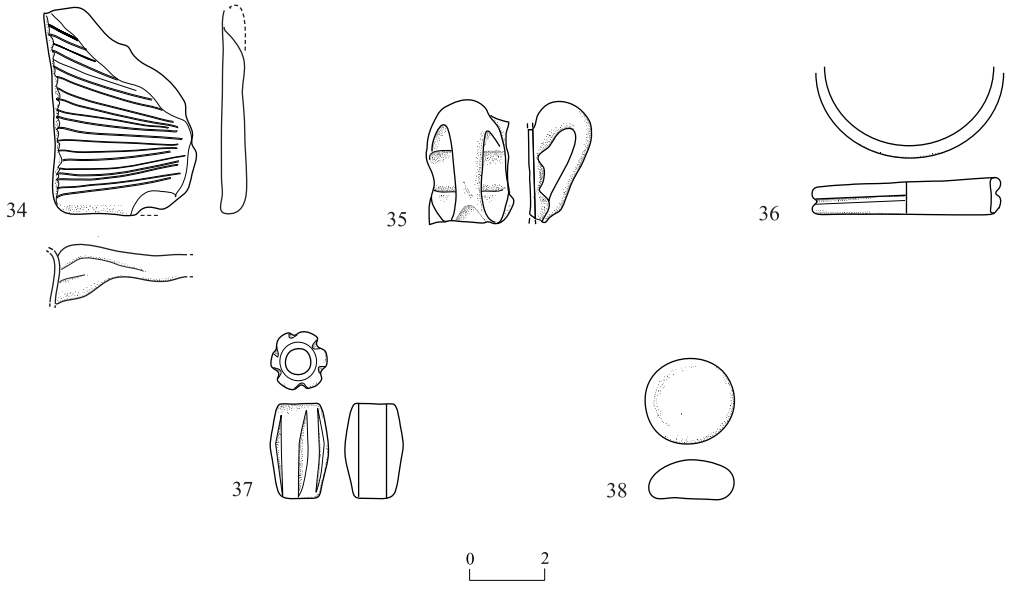

Fig. 3. Varia.

No.	Vessel	Locus	Reg. No.	Color
34	Jug	1253	2557	Dark bluish green
35	Handle	1091	1501/6	Light bluish green
36	Bracelet	1266	2565/3	Opaque black
37	Bead	1093	1511	Yellowish green faience
38	Inlay	1056	2262/2	Dark blue

Inlay (Fig. 3:38).— This small circular object, made of dark blue glass, apparently served an inlay for a ring.

REFERENCES

Ariel D. This volume. The Coins from the Hellenistic–Byzantine-Period Rural Settlement at el-Khirba, Shoham.

Barag D. 1970. Mesopotamian Core-Formed Glass Vessels (1500–500 B.C.). In A.L. Oppenheim, R.H. Brill, D. Barag and A. von Saldern. *Glass and Glassmaking in Ancient Mesopotamia: An Edition of the Cuneiform Texts Which Contain Instructions for Glassmakers with a Catalogue of Surviving Object*s (Corning Museum of Glass Monographs III). Corning–London–Toronto. Pp. 129–200.

Gorin-Rosen Y. and Katsnelson N. 2007. Local Glass Production in the Late Roman–Early Byzantine Periods in Light of the Glass Finds from Khirbat el-Ni‘ana. *‘Atiqot* 57:73–154.

Grose D.F. 1979. The Syro-Palestinian Glass Industry in the Later Hellenistic Period. *Muse* 13:54–67.

Grose D.F. 1989. *The Toledo Museum of Art. Early Ancient Glass: Core-Formed, Rod-Formed, and Cast Vessels and Objects from the Late Bronze Age to the Early Roman Empire, 1600 B.C. to A.D. 50.* New York.

Hadad S. 2002. Glass Vessels. In S. Agady, M. Arazi, B. Arubas, S. Hadad, E. Khamis and Y. Tsafrir. *Byzantine Shops in the Street of the Monuments at Bet Shean (Scythopolis). In L.V. Rutgers ed. What Athens Has to Do with Jerusalem: Essays on Classical, Jewish, and Early Christian Art and Archaeology in Honor of Gideon Foerster* (Interdisciplinary Studies in Ancient Culture and Religion 1). Leuven. Pp. 483–492.

Hadad S. 2006. Glass Finds. In A. Mazar. *Excavations at Tel Beth-Shean 1989–1996* I: *From the Late Bronze Age IIB to the Medieval Period* (The Beth-Shean Valley Archaeological Project 1). Jerusalem. Pp. 626–637.

Hadad S. 2010. The Glass Vessels. In S. Kol-Ya‘akov. *Salvage Excavations at Nesher-Ramla Quarry* I. Haifa. Pp. 189–195, 358–367.

Isings C. 1957. *Roman Glass from Dated Finds* (Archaeologica Traiectina II). Groningen–Djakarta.

Israeli Y. 2008. The Glass Vessels. In J. Patrich. *Archaeological Excavations at Caesarea Maritima, Areas CC, KK and NN; Final Reports* I: *The Objects*. Jerusalem. Pp. 367–418.

Jackson-Tal R.E. 2004. The Glass Vessels. In E.C.M. van den Brink. A ‘Provincial’ Roman-Period Samaritan Burial Ground in Pardes Ha-Gedud, Netanya. *‘Atiqot* 47:143–148.

Jennings S. 2004–2005. *Vessel Glass from Beirut, BEY 006, 007 and 045* (*Berytus* 48–49). Beirut.

Ovadiah R. 1999. A Burial Cave of the Hellenistic and Early Roman Periods at Hagosherim. *‘Atiqot* 38:33*–47* (Hebrew; English summary, pp. 223–224).

Rapuano R. This volume. The Pottery from the Hellenistic–Byzantine-Period Rural Settlement at el-Khirba, Shoham.

Sion O. This volume. A Rural Settlement from the Hellenistic to the Byzantine Periods at el-Khirba, Shoham.

Spaer M. 1988. The Pre-Islamic Glass Bracelets of Palestine. *JGS* 30:51–61.