'Atiqot 109, 2022

Selected Pottery from the Synagogue at Ḥorbat Merot

Débora Sandhaus

The pottery retrieved from the Synagogue excavations at Ḥorbat Merot was initially sorted and selected by the excavation director, Emmanuel Damati, in the 1980s (see Damati, this volume). However, as the research on Galilean pottery has since greatly advanced, its publication requires reorganization and updating.[1]

Several pottery assemblages are presented below, according to their archaeological context. The pottery sealed below the Stratum II Phase 2 stone-paved synagogue floor (Loci 90, 99, 104, 119, 141, 143; see Damati, this volume: Plan 2)[2] includes mostly Roman-period pottery, but also late Byzantine-period vessels that constitute the *terminus post quem* for the laying of the floor (Figs. 1, 2). An Umayyad-period pottery vessel was retrieved from a rock-hewn niche (L118) sealed by the Stratum II Phase 3 Bet Midrash floor (Fig. 3). In addition to these finds, a selection of Roman- to Ottoman-period pottery assemblages deriving from disturbed contexts is presented, to better illustrate the range of occupation periods at the site (Figs. 4–13). Most of the pottery from the synagogue building phases (Stratum II, Phases 1–3) was disturbed by the later Stratum III Mamluk-period occupation.

The pottery assemblages from the different periods are discussed and illustrated by period, and within each period from open to closed forms, and from the earliest to the latest vessels. The parallels cited in the figure description tables were selected from recently published, geographically-related and comprehensive pottery reports and studies. The dating, based on the parallels, appears in the text. Parallels for the Roman and Byzantine periods are cited from Ẓippori/Sepphoris (Balouka 2013), Wadi Ḥamam (Leibner 2018), and Hippos-Sussita (Kapitaikin 2018). Parallels for the Umayyad-period pottery come from the theater pottery workshop at Baysān/Bet-She'an (Bar-Nathan 2011) and from Młynarczyk's work on the

[1] In 2021, I was asked by Danny Syon to update the original manuscript.

[2] The stratigraphy and chronology of the synagogue (Stratum II) is divided into four main phases: Phase 1A, the construction of the synagogue, dated to c. 400–450; Phase 1B, the laying of the mosaic floor, dated to mid-fifth century, based on a single isolated coin from the first half of the fifth century that was found underneath the mosaic floor (see Bijovsky, this volume: Coin No. 220); Phase 2, the laying of the stone-paved floor, dated by the latest coin found in Foundation Deposit L157, a small *follis* of Anastasius I (507–512; see Bijovsky, this volume: Coin No. 670); and Phase 3, the new synagogue building, dated from the earthquake of 749 to the tenth century (see Damati, this volume).

pottery from Hippos-Sussita (Osband and Eisenberg 2018). The Tiberias pottery corpus is cited for the Umayyad, Abbasid and Fatimid periods (Stacey 2004), and Avissar and Stern's comprehensive pottery catalogue (2005), as well as the pottery report of Khirbat Din'ila in Upper Galilee (Stern 2014), are used for the Crusader, Mamluk and Ottoman periods. Parallels for the lamps come from Wadi Ḥamam (Gärtner and Leibner 2018), Bet She'an (Hadad 2002) and the Byzantine and Early Islamic lamp catalogue (Sussman 2017). The canonic works on the Kefar Ḥananya pottery (Adan-Bayewitz 1993) and the Late Roman Red Ware (Hayes 1972) are cited where relevant. References to a few other sites are made when necessary.

The Pottery below the Stratum II Phase 2 Stone-Paved Floor

Several pottery vessels were retrieved from shallow probes dug below the Phase 2 stone-paved floor of the synagogue (Figs. 1, 2; see Damati, this volume: Plan 2). The pottery from this sealed context comprised mostly Roman-period sherds, but also some Byzantine-period sherds, providing a *terminus post quem* for the laying of the stone floor, no earlier than the fifth century CE. The Roman-period pottery assemblage aligns with the contemporary cultural sphere in the Galilee, as the cooking wares were mostly Kefar Ḥananya forms (Adan-Bayewitz 1993), and the jars were probably Shiḥin jar forms (Adan-Bayewitz and Perlman 1990; Adan-Bayewitz and Wieder 1992:196). The Byzantine-period vessels are also the common vessel forms in the Galilean settlements.

Bowl (Fig. 1:1).— A red-slipped bowl classifies as a Phocaean PRS Form 3C bowl, dating to the second half of the fifth century CE (Hayes 1972:337).

Cooking Bowls.— The cooking-ware bowls are Galilean types, probably all manufactured at Kefar Ḥananya. They include Kefar Ḥananya Form 1A (Fig. 1:2–4), dated from the end of the first century BCE to the end of the third century CE; Kefar Ḥananya Form 1B (Fig. 1:5–7), dated from the second half of the first, or the first half of the second to the mid-fourth century CE; and several Kefar Ḥananya Form 1E bowls (Fig. 1:8–12), dated from the mid-third to the beginning of the fifth century CE.

Cooking Vessel Lids (Fig. 1:13, 14).— The lids have a ribbed body, a slight carination and a knife-cut rim, and they were made of a lighter-colored clay with a gray core. These lids were very common, with a chronological range from the fourth to the eighth century CE.

Casseroles.— The casseroles, or open cooking pots, are of two main forms. A casserole with a rounded body and a short, everted neck, a simple rim and two vertical handles (Fig. 1:15) classifies as Kefar Ḥananya Form 3A, dating from the mid-first century BCE to the mid-second century CE. The casseroles with carinated walls and a shelf rim (Fig. 1:16, 17) classify as Kefar Ḥananya Form 3B, dating to the beginning of the second–fourth century CE.

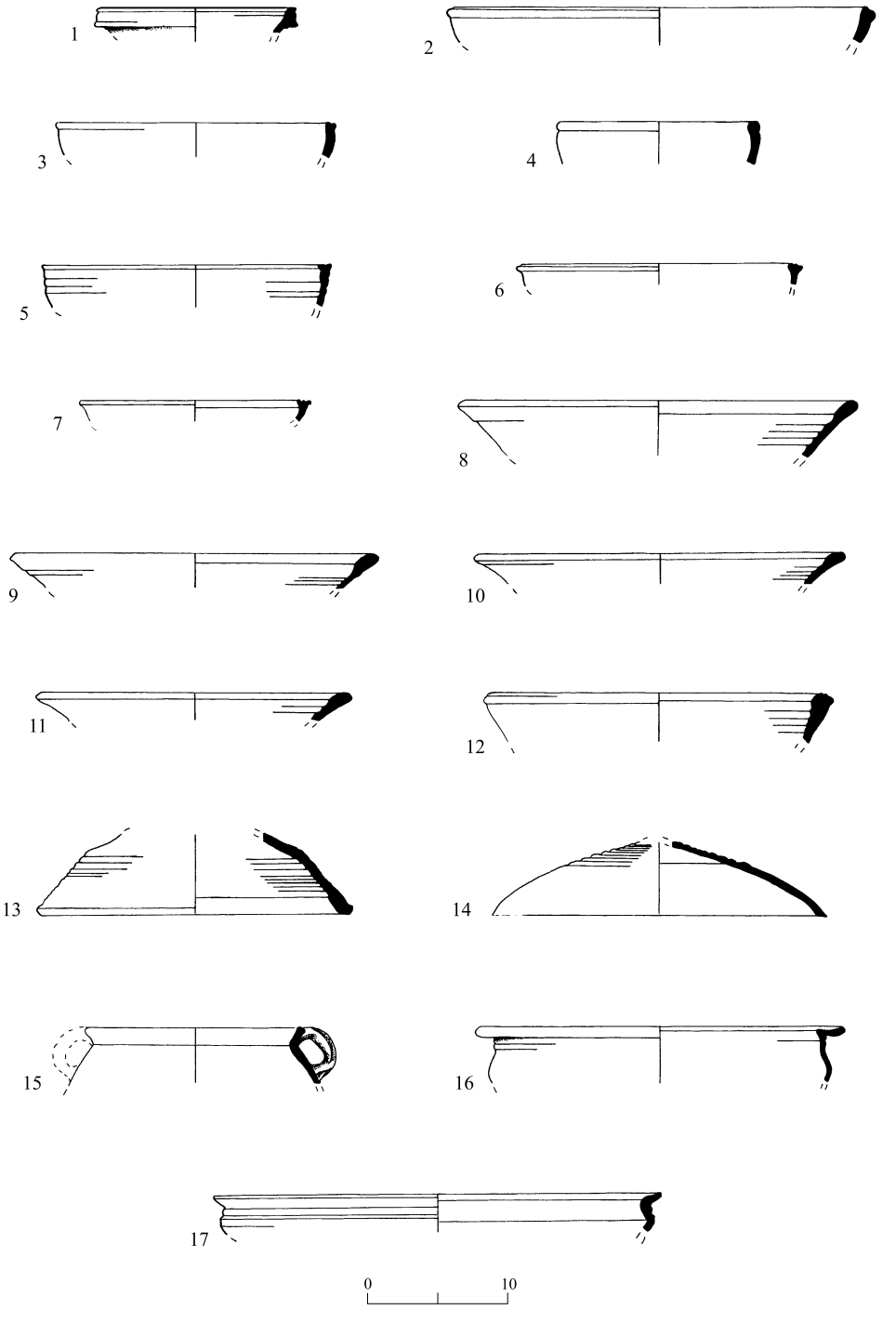

Fig. 1. Pottery from loci sealed below the Stratum II Phase 2 stone floor.

◂ **Fig. 1**

No.	Vessel	Locus	Basket	Description	Parallels
1	Bowl	141	1593/3	Light red fabric, well-levigated, well-fired, red slip	Hayes 1972:337, Late Roman C–Phocean Form 3C, Fig. 68:15
2	Cooking bowl	104	1523/2	Light red fabric, few light brown grits	Kefar Ḥananya: Adan-Bayewitz 1993:88–91, Form 1A; 2003:8–20 Ẓippori: Balouka 2013:32, GBL1a, Pls. 9:22–24; 16:1–4
3	Cooking bowl	104	1533/11	Red fabric, very few light brown grits	As No. 2
4	Cooking bowl	104	1523/4	Red fabric, well-levigated	As No. 2
5	Cooking bowl	141	1493/9	Red fabric, few white grits	Kefar Ḥananya: Adan-Bayewitz 1993:91–97, Form 1B Ẓippori: Balouka 2013:32, GBL1a, Pls. 9:25–27; 16:5–10
6	Cooking bowl	119	1510/24	Red fabric, few white grits	As No. 5
7	Cooking bowl	104	1532/9	Reddish brown fabric, well-levigated	As No. 5
8	Cooking bowl	90	1366/3	Red fabric, few white grits	Kefar Ḥananya: Adan-Bayewitz 1993:103–109, Form 1E Ẓippori: Balouka 2013:33–34, GB1e, Pl. 16:14–16
9	Cooking bowl	90	1366/4	Red fabric, white grits	As No. 8
10	Cooking bowl	90	1365/12	Red fabric, few large, black grits	As No. 8
11	Cooking bowl	90	1365/14	Reddish dark brown fabric, few white grits	As No. 8
12	Cooking bowl	90	1605/1	Red fabric, few white grits	As No. 8
13	Lid	143	1605/1	Red fabric, few white grits	Ẓippori: Vincenz 2013:151, Pl. 47:18
14	Lid	90	1366/6	Reddish brown fabric, few white grits	Wadi Ḥamam: Leibner 2018: Fig. 9.39 Ẓippori: Balouka 2013:30–31, Pl. 29
15	Casserole	90	1366/2	Red fabric, well-levigated	Kefar Ḥananya: Adan-Bayewitz 1993:111–119, Form 3A Ẓippori: Balouka 2013:22, OCP1a, Pls. 1:5; 2:14–19; 9:1–6
16	Casserole	99	1409/5	Red fabric, few white grits	Kefar Ḥananya: Adan-Bayewitz 1993:119–124, Form 3B Ẓippori: Balouka 2013:28, OCP1b, Pl. 13:6–9
17	Casserole	99	1409/9	Red fabric, few white grits	As No. 16

Cooking Pots.— The closed cooking pots include Kefar Ḥananya Form 4A (Fig. 2:1), dating from the mid-first century BCE to the mid-first century CE; Kefar Ḥananya Form 4C (Fig. 2:2–4), from the mid-second to the mid-fourth century CE, and Kefar Ḥananya Form 4D (Fig. 2:5, 6), from the late third or early fourth to the late fourth or early fifth century CE. A different type of globular cooking pot with ribbed walls, a tall neck and a simple rim (Fig. 2:7, 8) is common in the Galilee from the late fourth century CE and throughout the Byzantine period.

Storage Jars.— Storage jars with a short, slightly concave neck and a grooved rim (Fig. 2:9, 10) have a sack- or barrel-shaped ribbed body and two loop handles attached to the shoulders. They are the most common Roman-period storage jars in the Galilee in the early second to late third centuries CE. A different storage jar with a taller vertical neck and a thickened, everted rim (Fig. 2:11) had a ribbed, barrel-shaped body, and was a common form in Galilean assemblages, dating from the second to the end of the third or early fourth century CE.

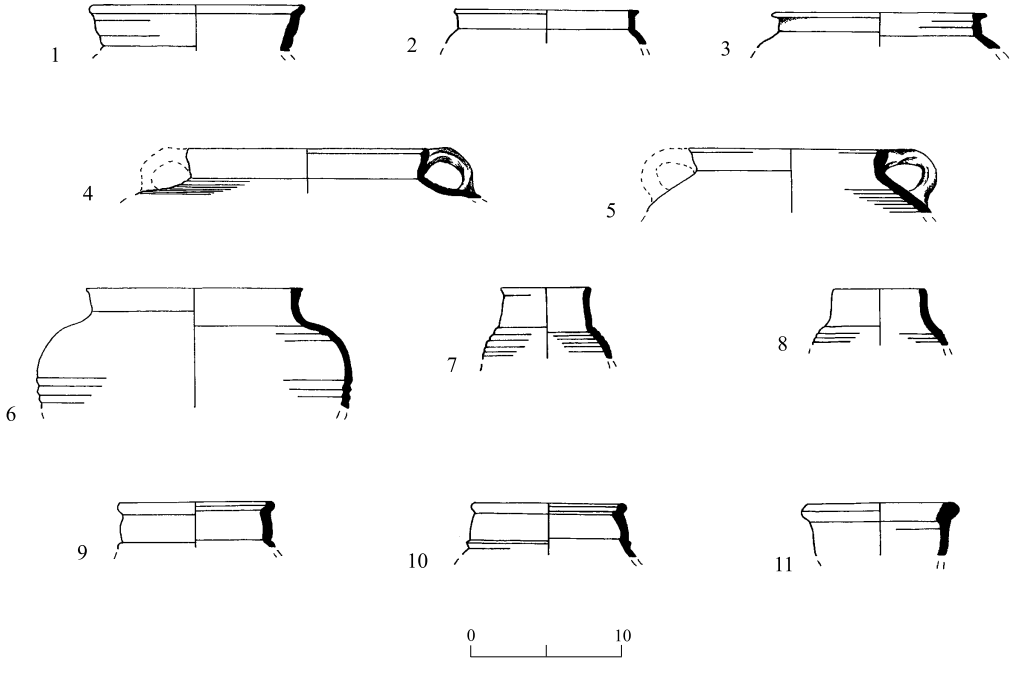

Fig. 2. Pottery from loci sealed below the Stratum II Phase 2 stone floor (cont.).

◂ **Fig. 2**

No.	Vessel	Locus	Basket	Description	Parallels
1	Cooking pot	104	1533/1	Reddish-brown fabric	Kefar Ḥananya: Adan-Bayewitz 1993:124–125, Form 4A Ẓippori: Balouka 2013:21, CP2, Pls. 2:1–13; 8:1–3
2	Cooking pot	104	1532/5	Red fabric, few white grits	Kefar Ḥananya: Adan-Bayewitz 1993:124–130, Form 4C Ẓippori: Balouka 2013:22, CP3b, Pl. 13:1–5
3	Cooking pot	119	1509/3	Red fabric, well-levigated	As No. 2
4	Cooking pot	104	1532/2	Red fabric, gray core, few grits	As No. 2
5	Cooking pot	90	1366/1	Red fabric, well-levigated	Kefar Ḥananya: Adan-Bayewitz 1993:130–132, Form 4D Ẓippori: Balouka 2013:22–23, CP3b, Pl. 28:1–7
6	Cooking pot	90	1366/5	Red fabric, white grits	As No. 5
7	Cooking pot	90	1365/3	Light red fabric, few white grits	Wadi Ḥamam: Leibner 2018:316, Form C4b, Fig. 9.41 Ẓippori: Balouka 2013:23–24, Pl. 28:8–12
8	Cooking pot	90	1366/7	Light red fabric, few white grits	As No. 7
9	Jar	99	1409/14	Red fabric, reddish core, black and white grits	Wadi Ḥamam: Leibner 2018:309, Fig. 9.12 Ẓippori: Balouka 2013:38, SJ2, Pls. 3:10–12; 17:1–10
10	Jar	99	1409/8	Reddish-light brown fabric, light gray core, white grits	As No. 10
11	Jar	104	1532/1	Red fabric, reddish core, white grits	Wadi Ḥamam: Leibner 2018: Fig. 9.24, 2nd–3rd c. CE (common in assemblages dated to 130 CE) Ẓippori: 3rd–early 4th c. CE. Balouka 2013:38, SJ3, Pl. 18:3–6

POTTERY SEALED BENEATH THE BET MIDRASH FLOOR

Flask.— A complete buff-ware flask was found in a rock-cut niche (L118) sealed by the Bet Midrash floor (see Damati, this volume: Plan 4). The flask is asymmetrical, with one bulging side and the other flattish with emphasized wheel marks; the neck is inserted into the body and two loop handles are attached to the shoulders (Fig. 3). This flask is characteristic of the Umayyad period, with similar vessels coming from Hippos-Sussita, and from the Bet She'an pottery workshop, dated before the 749 CE earthquake. The sealed location provides a *terminus post quem*, indicating that the floor of the Bet Midrash of the Stratum II Phase 3 synagogue was laid after 749 CE.

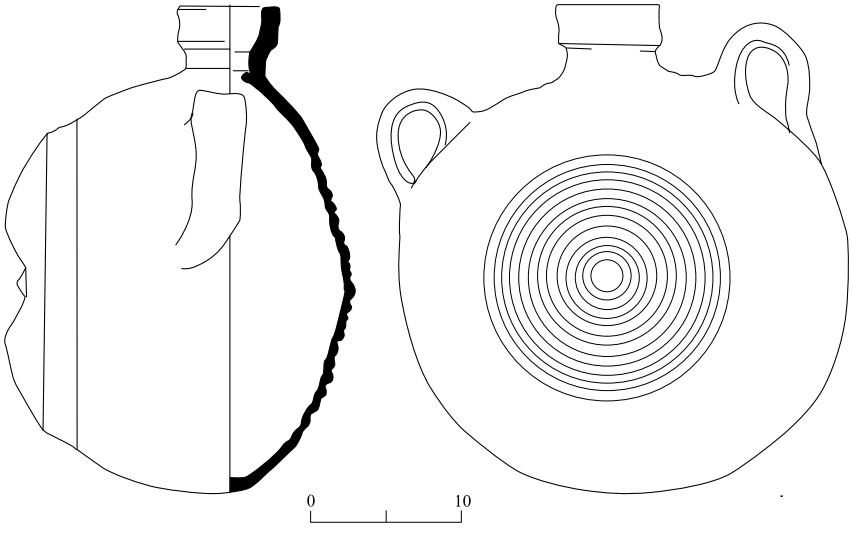

Fig. 3. Umayyad flask sealed below the Stratum II Phase 3 Bet Midrash floor.

Locus	Basket	Description	Parallels
118	1503	Soft buff fabric	Hippos-Sussita: Osband and Eisenberg 2018: Pl. 10.3:25 Bet She'an pottery workshop: Bar-Nathan 2011: Figs. 2.28–2.30

Pottery from Disturbed Contexts within the Synagogue

The Roman Period

The Roman-period pottery assemblage includes cooking vessels, jugs, storage jars and lamps, and is dated from the late first century BCE to the mid-fourth century CE (Figs. 4, 5).

Cooking Vessels.— The Roman-period cooking ware classify as Kefar Ḥananya forms, probably manufactured at Kefar Ḥananya, dating from the first to the fourth centuries CE (Adan-Bayewitz 1993). The bowl sherds include Forms 1A (Fig. 4:1), 1B (Fig. 4:2) and 1E (Fig. 4:3, 4). These cooking ware bowl forms were also found beneath the Stratum II Phase 2 floor (see above). The casseroles classify as Kefar Ḥananya Forms 3A (Fig. 4:5, 6) and 3B (Fig. 4:7, 8), and the closed cooking pots are Forms 4A (see Fig. 2:1), 4B (Fig. 4:9), 4C (Fig. 4:10) and 4D (Fig. 4:11). Again, Kefar Ḥananya casserole Forms 3A and 3B, and cooking pots Forms 4A, 4C and 4D, were also found under the Stratum II Phase 2 floor (see above); Form 4B dates from the mid-first to the mid-second century CE. The Roman-period casserole lids manufactured at Kefar Ḥananya were discussed above (see Fig. 1:13, 14).

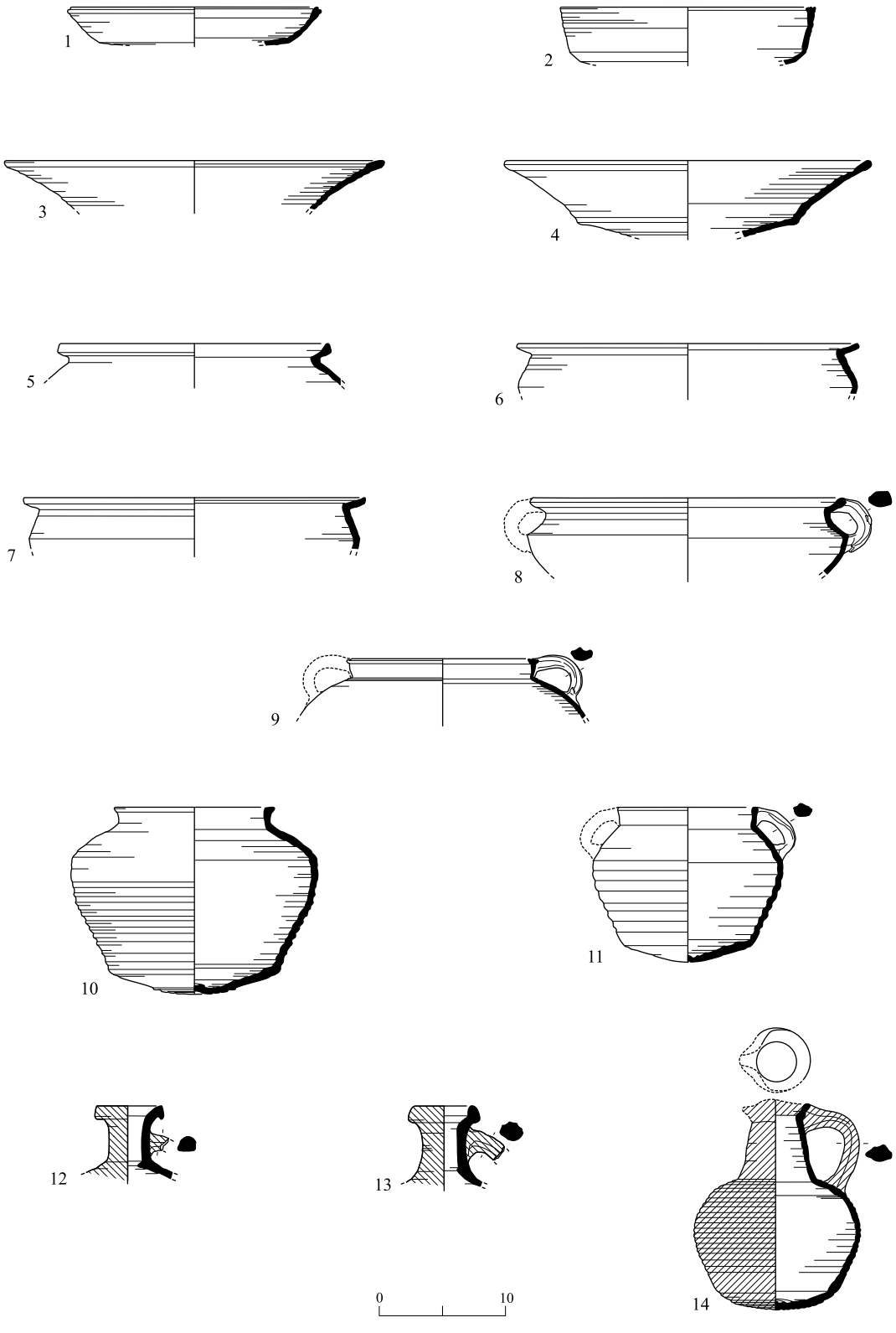

Fig. 4. Pottery from disturbed contexts: Roman-period cooking vessels and jugs.

◂ **Fig. 4**

No.	Vessel	Locus	Basket	Description	Parallels
1	Cooking bowl	69	1194/5	Reddish brown fabric	As Fig. 1:2
2	Cooking bowl	123	1542/2	Orange-brown fabric, gray core, black and white grits	As Fig. 1:5
3	Cooking bowl	87	1326/33	Reddish brown fabric; ribbed int.	As Fig. 1:8
4	Cooking bowl	87	1350/9	Reddish brown fabric; ribbed int.	As Fig. 1:8
5	Casserole	125	1545	Brown fabric, few small white grits	As Fig. 1:15
6	Casserole	26	1080	Reddish brown fabric, few white grits	As Fig. 1:15
7	Casserole	123	1542/1	Red fabric	As Fig. 1:16
8	Casserole	165	1715/1	Red fabric	As Fig. 1:16
9	Cooking pot	164	1727	Reddish brown fabric, small white grits	Kefar Ḥananya: Adan-Bayewitz 1993:126–128, Form 4B Ẓippori: Balouka 2013:21–22, CP3a, Pl. 8:4–11
10	Cooking pot	90	1365/16	Reddish brown fabric	As Fig. 2:2
11	Cooking pot		1322/39		As Fig. 2:5
12	Jug	87	1350/20	Red fabric, gray grits, red slip	Hippos-Sussita: Kapitaikin 2018: Pl. 3:76
13	Jug	Surface	1624/1	Red fabric, gray grits, red slip	Ẓippori: Balouka 2013:42, AMP1, Pl. 5:12, 13
14	Jug	59	1322/51	Light brown-orange fabric, white grits, red slip	Hippos-Sussita: Kapitaikin 2018: Pl. 15:59 Wadi Ḥamam: Leibner 2018: 310, Fig. 9.13–similar jug without trefoil spout Ẓippori: Balouka 2013:42, JG1, Pls. 6:1–4; 11:1

Jugs.— Two red-slipped jugs have tall narrow necks and out-flaring rims, and a handle drawn from mid-neck to shoulder (Fig. 4:12, 13). One jug has an out-flaring rim with a triangular section (Fig. 4:12); the other has an out-flaring thickened rim with an internal gutter, and one, or possibly two handles (Fig. 4:13). Red-slipped jugs are known in Galilee, mostly in first- and second-century CE contexts, for example in the basilica at Hippos-Sussita, but they also continue into the third century CE. Another complete jug has a ribbed globular body, a rounded base, a conical neck with a trefoil rim, and a strap handle from rim to shoulder (Fig. 4:14). This jug was manufactured from hard clay, fired to reddish gray color on the exterior, a treatment designated Ḥula Valley Spatter Painted ware, well-known in the Galilee from the Hellenistic and Roman periods (Berlin and Stone 2022). This jug is dated by parallels to the first–third centuries CE.

Storage Jars.— The Early Roman-period storage jars have a sack-shaped body, a somewhat concave thin-walled neck, and a grooved rim (Fig. 5:1), and they are most common in the late first and second centuries CE (see also, Fig. 2:9, 10). Another jar sherd with a barrel-shaped ribbed body and a thicker walled vertical neck ending in a thickened everted rim (Fig. 5:2; see also Fig. 2:11) is dated to the second–third centuries CE, probably continuing in use in the beginning of the fourth century CE.

Lamps.— The lamps are of two main types. The wheel-made lamps have a rounded body with a flat base, a large filling hole surrounded by a ledge and a ridge, and a knife-pared or spatulated nozzle (Fig. 5:3–8). These lamps are the most common type in Judea and Galilee in the first century CE (Gärtner and Leibner 2018:416–417). The other common lamp type at Merot is the Northern Stamped Lamp, with a piriform to oval body, a sunken discus with a medium-sized filling hole, stamped decoration on the shoulders and a small triangular handle (Fig. 5:9–11). This lamp type appears mostly in the north, from the late third–early fourth to the sixth or even the seventh century CE, the form developing from a circular to an oval body; both forms are known from fourth-century CE assemblages at Wadi Ḥamam (Gärtner and Leibner 2018:423–425, and see discussion there).

Fig. 5 ▸

No.	Vessel	Locus	Basket	Description	Parallels
1	Jar	165	1715/2	Brown fabric, gray core, white grits	Ẓippori: Balouka 2013:37–38, SJ2, Pls. 3:10–12; 10:1–8 Wadi Ḥamam: Leibner 2018:309, Fig. 9.12
2	Jar	Surface	101/3	Sandy brown-red fabric, black and white grits	Ẓippori: Balouka 2013:38, Pls. 19:1–6; 30:1–4 Wadi Ḥamam: Leibner 2018:313, Fig. 9.27
3	Lamp	160	1716/1	Orange fabric	Rosenthal and Sivan 1978:80–81 Wadi Ḥamam: Gärtner and Leibner 2018:416–417, Pl. 11.1:1–9
4	Lamp	21	1112/1	Orange fabric	As No. 3
5	Lamp	127	1549	Orange fabric, burnt	As No. 3
6	Lamp	164	1721/1	Orange fabric	As No. 3
7	Lamp	164	1722/1	Orange fabric	As No. 3
8	Lamp	163	1744	Orange fabric	As No. 3
9	Lamp	84	1407/14	Light brown fabric, mold-made decoration	Wadi Ḥamam: Gärtner and Leibner 2018: Fig. 11.11 Northern Stamped Lamp: Sussman 2017: Type VI.II LR/B35.3, B35.4
10	Lamp	162	1710/16	Light brown fabric, stamped decoration	As No. 9
11	Lamp	51	1063/1	Light brown fabric, mold-made decoration	As No. 9

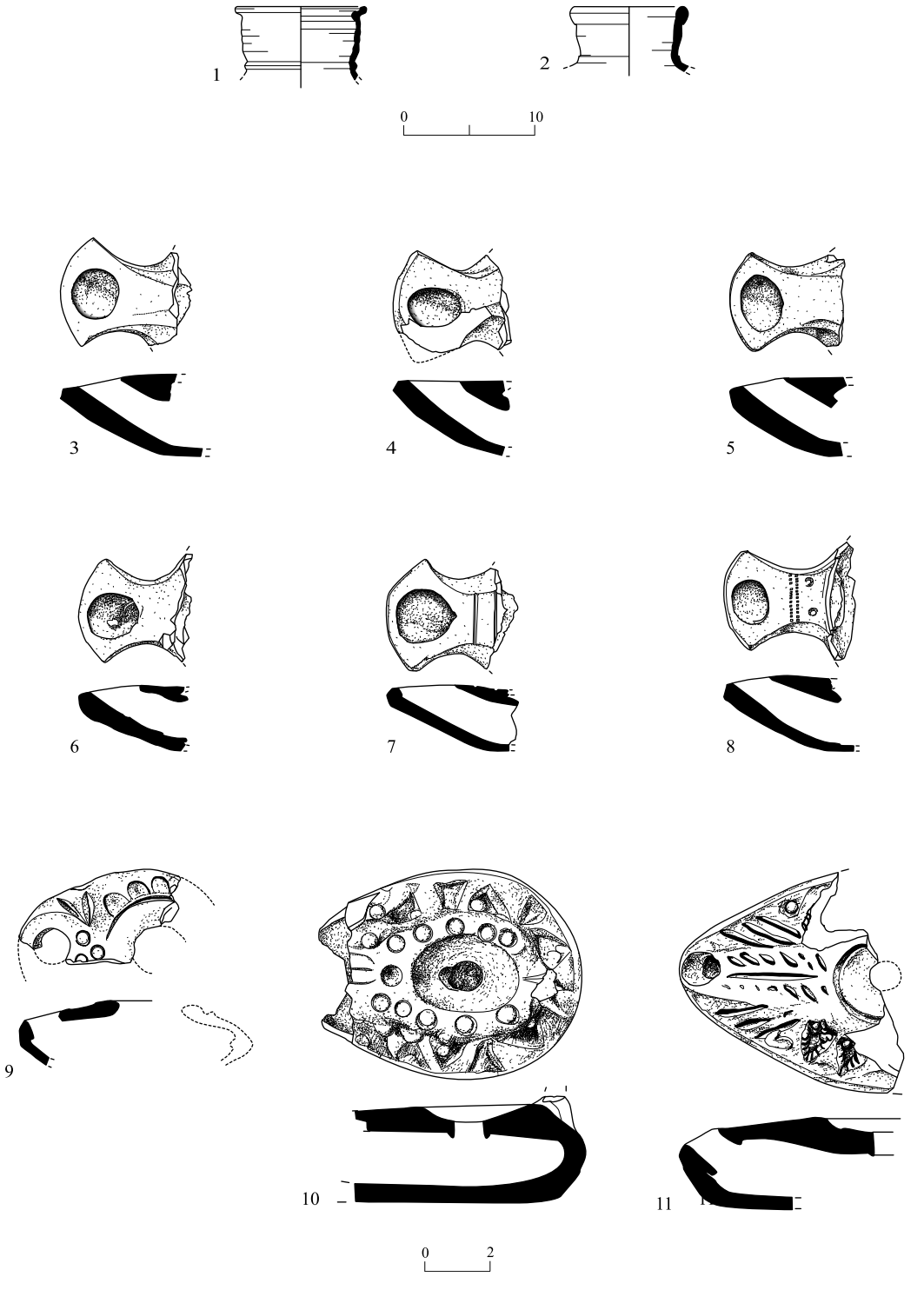

Fig. 5. Pottery from disturbed contexts: Roman-period jars and lamps.

The Byzantine Period

The Byzantine-period pottery assemblage comprises imported Late Red Ware bowls, cooking vessels, storage jars, a *dolium* and lamps, and is dated from the mid-fourth to the first half of the seventh century CE.

Late Roman Red Ware Bowls
The Late Roman Red Ware (LRRW) bowls include African (ARS), Phocaean (PRS) and Cypriot (CRS) forms, classified according to Hayes (1972).

African Red Slip (ARS) Bowls (Fig. 6:1, 2). — Sherds of a large shallow bowl with a heavy knobbed rim correspond to Hayes ARS Form 104C, dating from the mid-sixth to the first quarter of the seventh century CE.

Phocaean Red Slip (PRS) Bowl (Fig. 6:3).— Sherds of a deep bowl with a vertical rim incorporating a flange, correspond to Hayes PRS Form 3F, dating from the sixth century CE.

Cypriot Red Slip (CRS) Bowls (Fig. 6:4).— A sherd of a large bowl decorated with rouletting corresponds to Hayes CRS[3] Form 7.1, dating from the second half of the sixth to the beginning of the seventh century CE.

Cooking Vessels
In the Byzantine period, when pottery production at Kefar Ḥananya waned and eventually ceased in the course of the fifth century CE, different wares, clays and techniques were used to produce cooking wares. The temper was different, the ware was coarser but stronger, and the exterior surface of the vessels was ribbed. The Byzantine cooking ware tradition continued into the Early Islamic period.

Casseroles.— The casserole with horizontal handles, a cut rim and a fitting lid was the common open cooking-pot form. Two different forms appear at the site, both common in Galilee in the Byzantine period. One has a distinctive sharp mid-wall carination, sometimes ribbed walls, and a slanted cut rim (Fig. 6:5–9), and the other has curved ribbed walls ending in a cut rim (Fig. 6:10, 11).

Casserole Lids.— Lids matching the casseroles had curving ribbed walls, made of a coarse sandy cooking clay, and a small strap or knobbed handle (Fig. 6:12–14). These lids are common from the Byzantine to the Umayyad periods.

[3] Designated originally by Hayes as Late Roman D ware

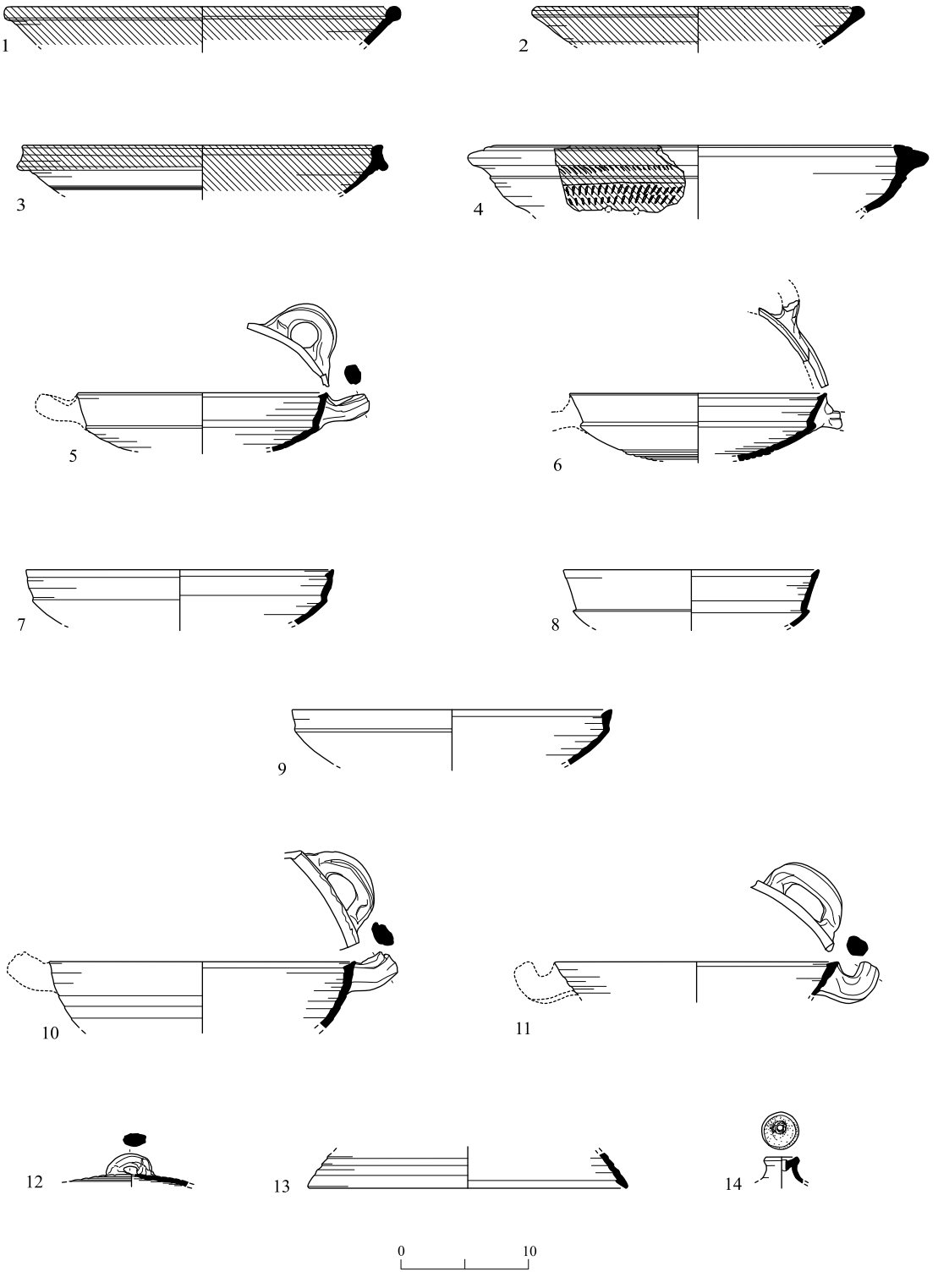

Fig. 6. Pottery from disturbed contexts: Byzantine-period bowls, casseroles and lids.

◂ **Fig. 6**

No.	Vessel	Locus	Basket	Description	Parallels
1	Bowl	65	1217/14	Red-orange fabric, red slip	Hayes 1972:166, Fig. 30:23, ARS Form 104C
2	Bowl	100	1377/2	Red-brown fabric, red slip	As No. 1
3	Bowl	127	1258/10	Red-orange fabric, red slip	Hayes 1972:338, Fig. 69, PRS Form 3F
4	Bowl	30	1029	Red-orange fabric, red slip	Hayes 1972:379, Fig. 81, CRS Form 7.1
5	Casserole	87	1351/14	Sandy red-brown fabric, few white grits	Wadi Ḥamam: Leibner 2018:315, Fig. 9.38 Ẓippori: Balouka 2013:30–31, OCP7b, Pl. 29:6–8
6	Casserole	87	1351/41	Sandy orange-brown fabric, few white grits	As No. 5
7	Casserole	127	1258/6	Sandy gray fabric	As No. 5
8	Casserole	87	1424/25	Sandy red-brown fabric, few white grits	As No. 5
9	Casserole	78	1607/3	Sandy brown-gray fabric	As No. 5
10	Casserole	155	1680	Sandy brown-gray fabric	Hippos-Sussita: Kapitaikin 2018: Pl. 29:14 Ẓippori: Balouka 2013:30–31, OCP7c, Pl. 29:9
11	Casserole	84	1407/15	Sandy brown-gray fabric	As No. 10
12	Lid	155	1680/1	Brown fabric, small white grits	Wadi Ḥamam: Leibner 2018: Fig. 9.39
13	Lid	84	1400/11	Brown fabric	
14	Lid	69	1274/5	Reddish-brown fabric	

Cooking Pots.— The characteristic Byzantine-period cooking pots, in use from the late fourth to the sixth or seventh century CE, include globular cooking pots with ribbed walls, no neck and a thickened grooved rim (Fig. 7:1), large globular ribbed pots with tall vertical necks, a flattened rim and ridged handles drawn from rim to shoulder (Fig. 7:2, 3), and a ribbed cooking pot with a squat body, a relatively tall neck ending in a pointed rim with an exterior ridge, and handles attached from rim to shoulder (Fig. 7:4).

Storage Vessels

Storage Jars.— Barrel-shaped storage jars with ribbed walls and short (Fig. 7:5) or slightly taller (Fig. 7:6) necks and out-folded rims are common in the Galilee, Golan and Jordan Valley in the late Byzantine and early Umayyad periods (sixth–seventh centuries CE).

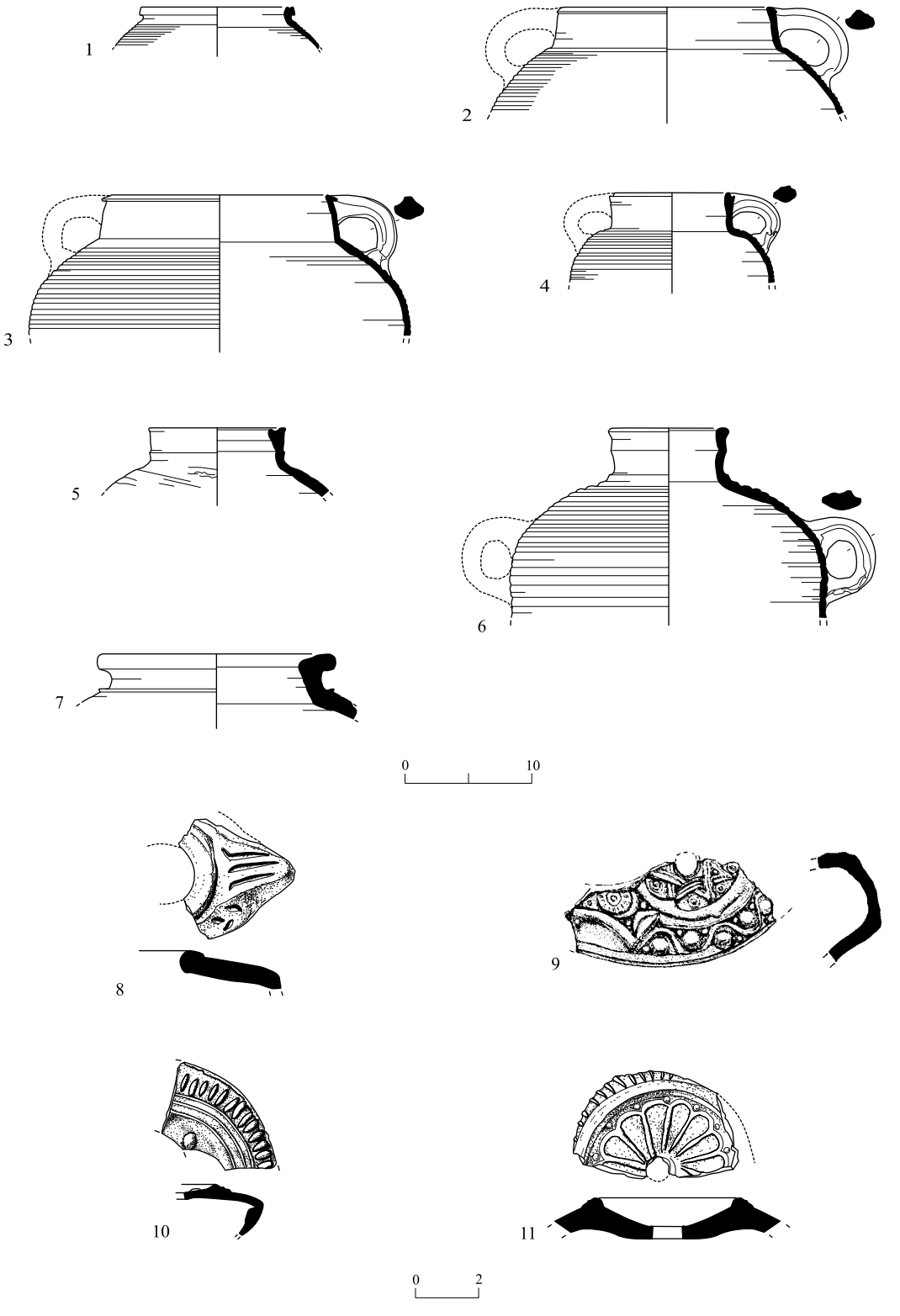

Fig. 7. Pottery from disturbed contexts: Byzantine-period cooking pots, jars and lamps.

◂ **Fig. 7**

No.	Vessel	Locus[i]	Basket	Description	Parallels
1	Cooking pot	87	1337/7	Red fabric, gray and white grits	Hippos-Sussita: Kapitaikin 2018: Pl. 12:11; 22:4 Kefar Ḥananya: Adan-Bayewitz 1993: Form C4A2 Jalame: Johnson 1988:190–191, Figs. 7-36, 7-37, Nos. 548–558 Bet She'an pottery workshop: Bar-Nathan 2011:260–263, BS-PWS-CP7, Pl. 11.22:12
2	Cooking pot	87	1351/36	Orange fabric, black grits	Wadi Ḥamam: Leibner 2018: Fig. 9.41 Ẓippori: Balouka 2013:23–24, CP4a, Pl. 28:8–10
3	Cooking pot	87	1351/22	Orange fabric, black grits	As No. 2
4	Cooking pot	127	1258/1	Red fabric, white grits	Wadi Ḥamam: Leibner 2018: Fig. 9.41 Ẓippori: Balouka 2013:23–24, CP4a, Pl. 28:11
5	Jar	84	1400/6	Brown fabric, gray and white grits	Hippos-Sussita: Kapitaikin 2018: Pl. 22:7
6	Jar	90	1365/1	Brown fabric, gray and white grits	Hippos-Sussita: Kapitaikin 2018: Pl. 26:44
7	*Dolium*	78	1296/1	Sandy brown fabric, small white grits	Magness 1993:233: Holemouth Jar Form 1B
8	Lamp	51	1063/4	Light brown fabric	Sussman 2017:276–277, VII.B49, Fig. 207 Bet She'an: Hadad 2002:26, Type 16 Wadi Ḥamam: Gärtner and Leibner 2018:424–425, Pl. 11.12
9	Lamp	n/a	n/a		Sussman 2017: VII B150.1, Fig. 210 Bet She'an: Hadad 2002:37–50, Type 19
10	Lamp	44	1602/1	Light brown fabric	Sussman 2017:194, No. 207, Type VI.I B32 Bet She'an: Hadad 2002:61, Type 23, No. 271
11	Lamp	21	1112/3	Sandy gray fabric, white grits	As No. 10

[i] n/a = not available.

Dolium.— The sherd of a large *dolium* with a short neck (Fig. 7:7), a wide opening and a heavy ledge rim with a ridge at the base of the neck was found. The vessel form and the clay are similar to *dolia* produced in Jerusalem in the fifth century CE (Magness 1993:233).

Lamps

The lamps include sherds of three different mold-made lamp types, all common in the north of the country in the Late Roman–Byzantine periods. The fist type is a 'bilanceolate lamp' (Fig. 7:8), an ovoid lamp with no separation between the nozzle and the body, and a handle extending from the body. The large filling hole is surrounded by a wide ridge, and a geometric or a herringbone pattern decorates the shoulders. These lamps are very common in the north of the country and in the Jordan Valley area in the fourth and fifth centuries CE. The second type, with a dense decoration (Fig. 7:9), is common in the fifth century CE. The third type (Fig. 7:10, 11), exhibits a decorated sunken discus and a radial pattern around the shoulder. This lamp type has a short square nozzle and a triangular, ridged, pyramidal knob handle; it is common along the coast and in Galilee from the mid-fourth to the sixth century CE, possibly continuing into the seventh century CE (Sussman 2017:207).

The Early Islamic Period

The Early Islamic pottery includes glazed bowls, handmade basins, cooking vessels, various jugs, storage jars and lamps dating from the Umayyad, Abbasid and Fatimid periods, with a chronological range from the second half of the seventh to the eleventh centuries CE.

Glazed Bowls

Splashed Lead Glazed Ware Bowls.— These bowls are made of a well-levigated, pinkish buff, light brown clay and are often partially pared on the exterior with a sharp tool. They are coated with a whitish slip, overlain by a freely splashed polychrome glaze (green, yellow, amber, brown and purple), or sometimes by a monochrome green or yellow glaze. The glaze is applied both on the interior and the exterior; the inner glaze is carefully treated and bright, the exterior one is careless and sometimes gritty (Avissar 1996:78–79). The bowls at Merot mostly have a flaring rim (Fig. 8:1), some have an S-shaped *cyma-recta* profile (Fig. 8:2–4), and a few have ledged rims (Fig. 8:5, 6). Some sherds have polychrome decoration (Fig. 8:1, 3, 4), others monochrome (Fig. 8:2, 5, 6), and two have an incised sgraffitto pattern on the interior (Fig. 8:3, 5).

The splashed glazed polychrome bowls were produced at various production centers, and they are attributed a chronological range from the mid-ninth to the eleventh century CE (Avissar 1996:78–80; Stacey 2004:117–120); the bowls with the *cyma-recta* profile were common in the tenth and eleventh centuries CE (Stacey 2004:117). The sgraffito decoration first appeared at the end of the ninth and continued into the eleventh century CE. The ledged rim bowls seem to be the latest development, pre-dating the twelfth- and thirteenth-century CE glazed bowls (Avissar 1996:75; Stacey 2004:117).

Fayyumi Ware Bowl.— A single sherd of a bowl with a ledged rim, made of a buff, creamy clay and decorated in the Egyptian Fayyumi style, although probably manufactured regionally, was found at Merot (Fig. 8:7). This bowl type has a polychrome glaze with the

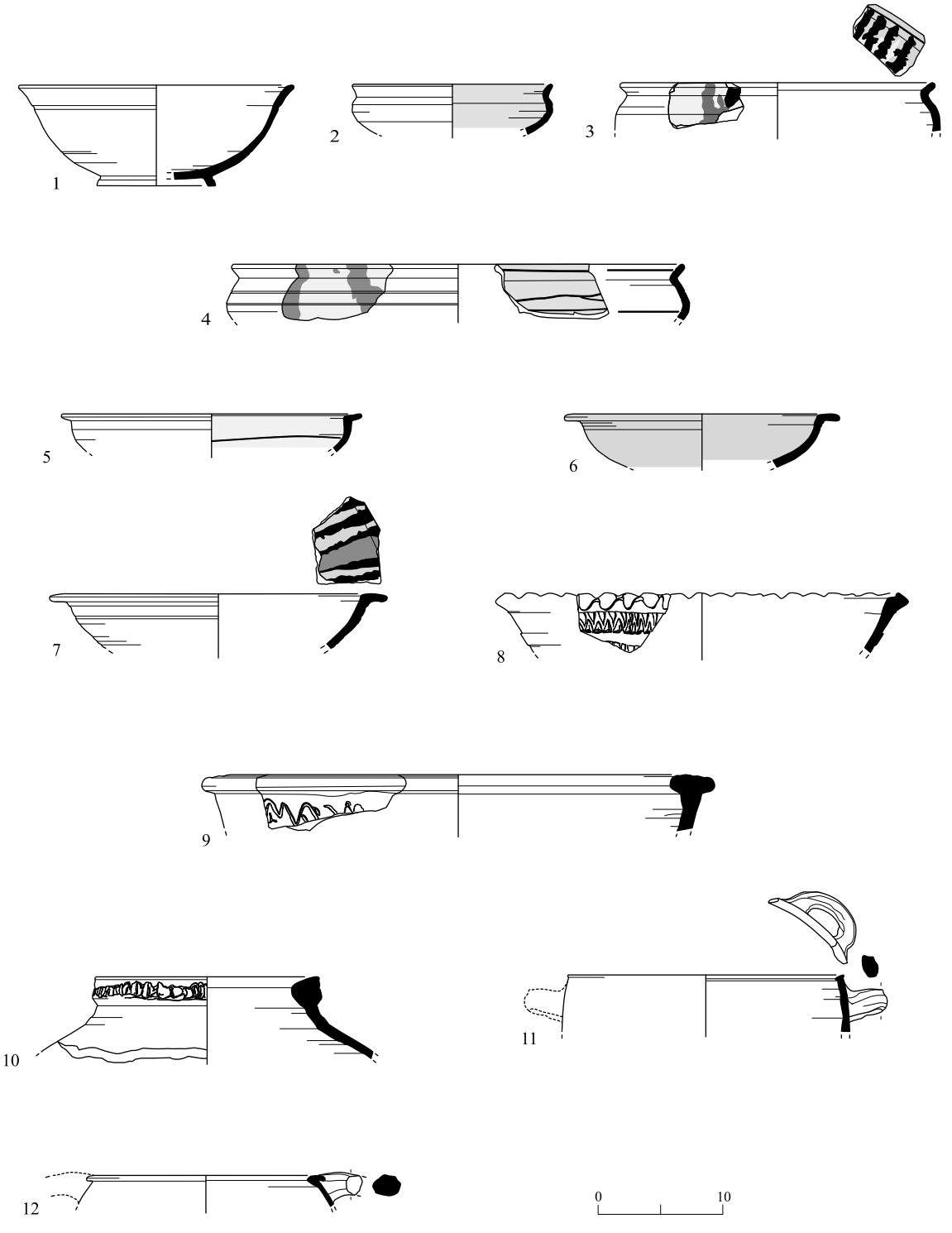

Fig. 8. Pottery from disturbed contexts: Early Islamic-period bowls, pithos and cooking vessels.

◂ **Fig. 8**

No.	Vessel	Locus[i]	Basket	Description	Parallels
1	Bowl	73	1206	Pared sides, sandy light brown fabric, white slip, touches of green and orange spots in radial lines on int., a few small green spots on ext.	Tiberias: Stacey 2004:117, Fig. 5.25:11 Yoqneʻam: Avissar 1996:78–80, Type 6, Fig. X.III.6:3
2	Bowl	n/a	1556/2	Pared sides, buff fabric, yellow glaze on int.	Tiberias: Stacey 2004:117, Fig. 5.25:4–7
3	Bowl	132	1554	Light brown fabric, brown, gray and green radial lines on int. and yellow, green and brown drips on ext.	As No. 2
4	Bowl	132	1564/17	Sandy light brown fabric, white slip, green glaze on int. yellow with green drips on ext.	As No. 2
5	Bowl	112	1517/18	Sandy brown-gray fabric, shiny yellow-gray glaze on int. and rim, decorated with thin line on the carination	Tiberias: Stacey 2004:117 Yoqneʻam: Avissar 1996:81, Type 7, Fig. XIII.7:1–6
6	Bowl	131	1563	Pared sides, brown-gray fabric, green glaze int. and ext.	Tiberias: Stacey 2004:117; Pl. 5.25:2
7	Bowl	140	1615/1	Pared sides, pink-brown fabric, brown, gray and orange radial lines on int. and rim, green on ext.	Tiberias: Stacey 2004:121, Fig. 5.29; Pl. 3.25 Yoqneʻam: Avissar 1996:82; Type 10, Fig. XIII.10:1
8	Bowl	n/a	1660/1	Handmade, gray fabric; decorated with thumb impressions on rim and rouletting on ext.	Tiberias: Stacey 2004:91, Fig. 5.4:4–5 Bet She'an pottery workshop: Bar-Nathan 2011: BS-PWS.KR13: Fig. 11.34:3, 4
9	Basin	133	1632/1	Handmade, gray fabric	Tiberias: Stacey 2004:101; Fig. 5.15:9, 10
10	Pithos	165	1715/3	Handmade, brown-orange fabric, gray core	Tiberias: Stacey 2004: Fig. 5.36:3, 4
11	Casserole	130	1562/17	Brown fabric, gray core, white grits	Tiberias: Stacey 2004: Fig. 5.32:7, 8 Bet She'an pottery workshop: Bar-Nathan 2011: Fig. 11.16:12
12	Cooking pot	87	1424/2	Brown-gray fabric	Tiberias: Stacey 2004: Fig. 5.32:12

[i] n/a = not available.

addition of purple and shades of blue. According to Avissar (1996:82), this ware appears in the second half of the eighth century CE, while Stacey (2004:121) dates its appearance to the tenth century CE.

Handmade Vessels

Handmade Bowl and Basin.— A sherd of a large dark gray bowl had a thumb-impressed decoration over the rim and a rouletted decoration on the exterior (Fig. 8:8). These bowls are characteristic of the Umayyad period in the Galilee and the Jordan Valley. A sherd of a large gray basin with a thickened rim and a decorated band incised with a sharp tool (Fig. 8:9) is characteristic of the Umayyad and early Abbasid periods.

Handmade Pithos.— Handmade pithoi appear in Galilee in many periods, and they are usually dated by their context, or sometimes more broadly by their ware. A pithos rim sherd made of brown-orange clay with a gray core, had a kind of self-slip and a thumb-impressed applied band on the rim; it can be dated to the late Byzantine–Umayyad periods (Fig. 8:10).

Cooking Wares

Casserole.— A deep coarse ribbed casserole with two horizontal ridge handles attached below a sharply cut rim (Fig. 8:11). Ribbed casseroles appear from the Byzantine period onward, becoming deeper and coarser over time. This casserole is characteristic of the Umayyad, Abbasid and Fatimid periods.

Cooking Pot.— The sherd of a globular neck-less cooking pot (apparently not ribbed) has an outward folding rim forming a small ledge and loop handles attached from the rim to the shoulder (Fig. 8:12). Similar forms are characteristic of the Abbasid period.

Cream Ware Vessels

Small Flasks and Jugs.—The cream- or buff-ware vessels include two main groups: utilitarian cream-ware flasks and jugs dated to the Umayyad period, and more delicate thin-walled drinking jugs and juglets that first appear in the Abbasid period. The former group is represented at Merot by sherds (Fig. 9:1), and by the complete flask described above (see Fig. 3). The latter group includes two thin-walled jugs with tall necks narrowing downward, one with a simple rim, two incised ridges on the neck, and two thin double-barreled handles drawn from below the rim to the shoulder (Fig. 9:2), and the other with a ridged rim (Fig. 9:3).

Jugs

Two-Handled Jug with White Decoration.— A complete jug made of reddish purple clay, has a biconical body, a low ring/omphalos base, a wide vertical ribbed neck and simple rim, and two strap handles attached from rim to shoulder (Fig. 9:4); it is decorated with white painted lines on the shoulder and rim. Similar vessels with white-painted decoration are

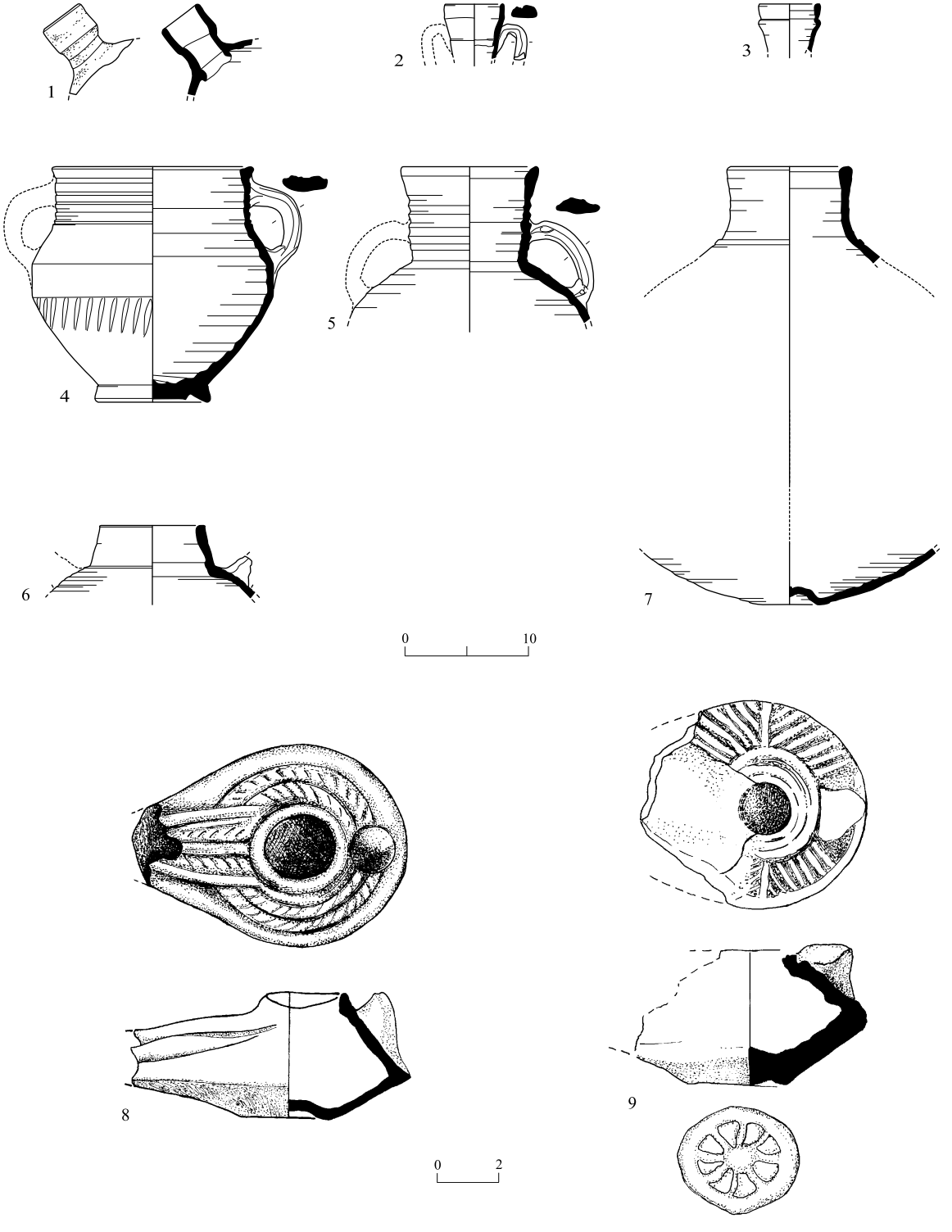

Fig. 9. Pottery from disturbed contexts: Early Islamic-period flask, jugs, storage jars and lamps.

◂ **Fig. 9**

No.	Vessel	Locus[i]	Basket[i]	Description	Parallels
1	Flask	Surface	101/2	Sandy yellowish-white fabric (Cream Ware)	See Fig. 3
2	Jug	86	1361/27	Sandy light gray-brown fabric, brown grits (Cream ware)	Tiberias: Stacey 2004:130, Fig. 5.41:9 Yoqneʻam: Avissar 1996: Type 3, Fig. XIII.129
3	Jug	130	1556/8	Yellowish-white fabric, brown band on neck (Cream ware)	Hippos-Sussita: Osband and Eisenberg 2018: Pl. 10.3:25 Tiberias: Stacey 2004:135, Fig. 5.46:2 Bet She'an pottery workshop: Bar-Nathan 2011: Figs. 2.28–2.30
4	Two-handled jug	n/a	1156	Reddish-purple fabric, white-painted bands on rim and shoulder	Tiberias: Stacey 2004:129–130, Fig. 5.39:2 Bet She'an pottery workshop: Bar-Nathan 2011: Fig. 11.22:2
5	Two-handled jug	131	1563/1	Yellowish-white fabric, few black grits	Tiberias: Stacey 2004: Fig. 5.43:2, 10th–11th c. CE
6	Storage jar	130	1562/4	Brown-gray fabric, gray core, white grits	Bet She'an pottery workshop: Bar-Nathan 2011:230–231, Type BS-TPWS.SJ2, Fig. 11.3
7	Storage jar	151	1647/1	Sandy yellow-light brown fabric, white grits	As No. 6
8	Lamp	n/a	n/a		Tiberias: Stacey 2004:149–153, Form 1A, Fig. 6 Bet She'an pottery workshop: Bar-Nathan 2011: Type BS-TPWS.LP2, Figs. 11.46, 11.47
9	Lamp	n/a	n/a		As No. 8

[i] n/a = not available.

well-known in Umayyad contexts, and according to Stacey, they continue to appear in the early Abbasid period (Stacey 2004:129).

Two-Handled Jug.— The upper part of a two-handled jug made in a yellowish white ware, has a tall, ribbed neck, an in-folded rim and two handles attached from mid-neck to shoulder (Fig. 9:5). The ware of the vessel resembles that of the Bet She'an pottery workshop (Bar-Nathan 2011:265; personal observation). Although no parallel was found, the characteristic ware, ribbing and proportions suggest an Umayyad date.

Storage Vessels

Storage Jars.— Ribbed bag-shaped jars with loop handles drawn from the shoulders. This jar type continued from the late Byzantine period, but the proportions and the rims changed in the Umayyad period, the body becoming bulkier and the neck either narrowing toward the rim (Fig. 9:6), or widening and ending in a pointed or slightly thickened rim (Fig. 9:7). These are the most popular storage jars in the north in the Umayyad period.

Lamps

The lamps are ovoid, with a conical handle and a ring base, and different decorative patterns (Fig. 9:8, 9). The lamps from Merot are decorated with radial lines around the filling hole and a stylized tree on the channel. These lamps are dated to the Umayyad and early Abbasid periods.

Crusader, Ayyubid and Mamluk Periods

The pottery from the Crusader, Ayyubid and Mamluk periods is presented together, as most of the glazed wares that first appeared in the second half of the twelfth century CE continued to appear in the Mamluk period. Since the pottery did not come from clear stratigraphic contexts and there is some overlap between these periods and cultures, the specific attribution is not always certain. The pottery includes glazed bowls, glazed and unglazed cooking wares, jars, lids and lamps. The glazed pottery groups that only appear from the mid-twelfth to the mid-thirteenth centuries CE are noted below.

Local Glazed Table Wares

Monochrome Glazed Ware Bowls.— These bowls include a variety of forms, including bowls with a rounded profile and a simple rim (Fig. 10:1). A white slip covers the interior of the bowls, occasionally extending just below the rim on the exterior, and a green or yellow glaze was applied over the slip; the glaze is usually well-melted, but occasionally flakes off. These bowls were made from different fabrics and produced in different workshops. This bowl type appears in the thirteenth century CE and was widespread throughout the southwestern Levant in the Mamluk period down to the fifteenth centuries CE and even later (Stern 2014:84, and see discussion and parallels therein).

Slip Painted Ware Bowls.— These bowls have the same forms, fabric, slip and glaze as the monochrome glazed bowls, but here the slip was applied as a design on the clay, over which a transparent green or yellow glaze was applied. The Merot bowls include forms with ledged rims (Fig. 10:2–4), slender out-flaring profiles (Fig. 10:5) or carinated profiles (Fig. 10:6–9) and simple or modelled rims. These bowls appeared in the second half of the twelfth century CE, and they were widespread throughout the Southern Levant in the Mamluk period (Avissar and Stern 2005:20; Stern 2014:89).

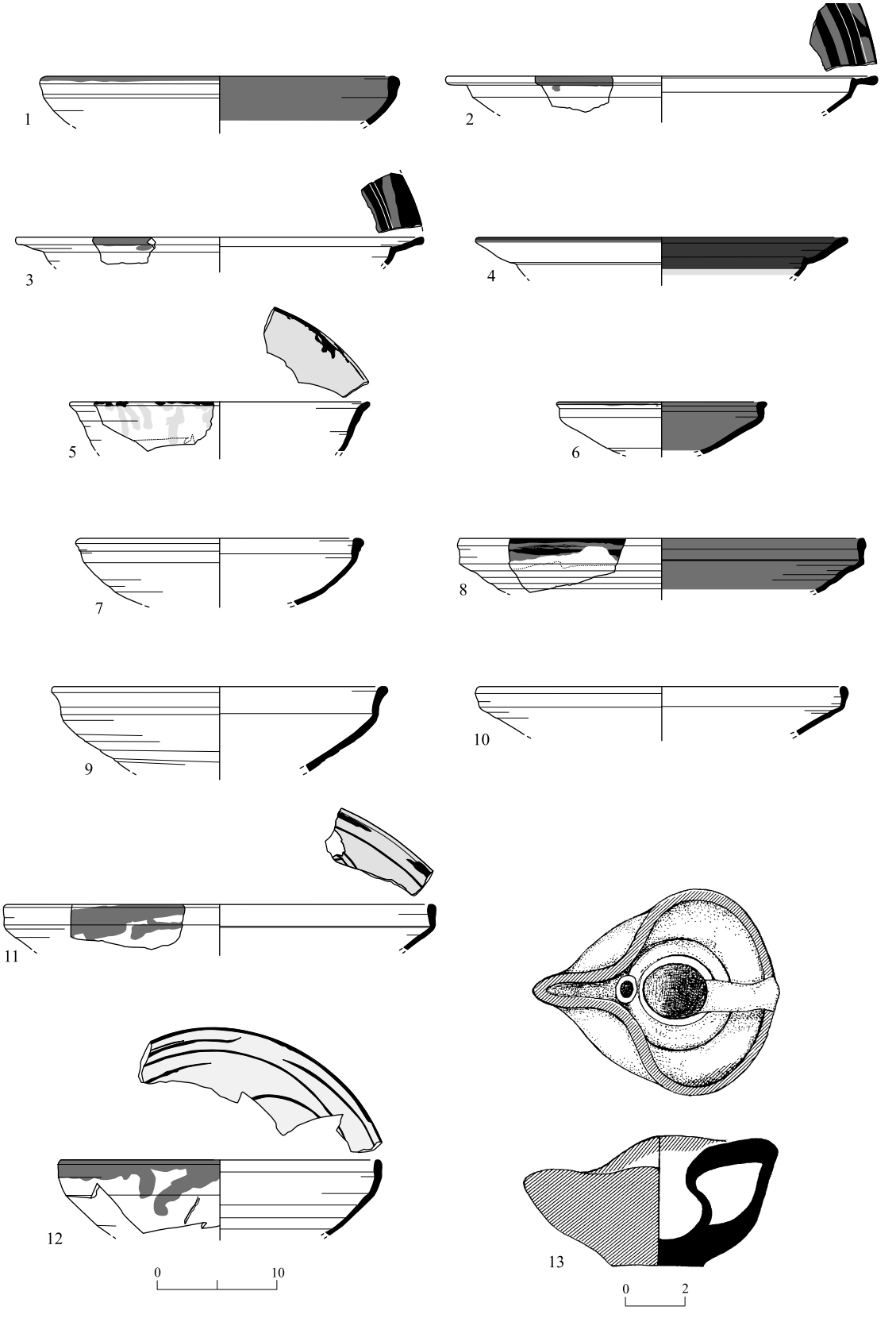

Fig. 10. Pottery from disturbed contexts: Crusader, Ayyubid and Mamluk-period bowls and lamp.

◂ **Fig. 10**

No.	Vessel	Locus[i]	Basket[i]	Description	Parallels
1	Bowl	78	1315/41	Brown fabric, few black and white grits, white slip, green glaze on int. and rim	Avissar and Stern 2005:12–14, Type I.1.4.1, Fig 4:2; Pl. III:8–10 Khirbat Dinʿila: Stern 2014:84–87, Fig. 7:6, 8
2	Bowl	23	1025/15	Orange-brown fabric, patterned white slip, transparent green glaze on int.	Avissar and Stern 2005:19, Type I.1.6.2, Fig. 7:7
3	Bowl	66	1304/1	Brown fabric, brown and gray-green glazed bands on int. and rim	As No. 2
4	Bowl	57	1167/5	Orange-brown fabric, patterned white slip, transparent yellow glaze on int.	Avissar and Stern 2005:19, Type I.1.6.2, Fig. 7, Pl. VI
5	Bowl	75	1223/27	Orange-brown fabric, white slip, yellow glaze, brown band on rim	Avissar and Stern 2005:19, Type I.1.6.1, Fig. 7:4
6	Bowl	100	1377/1	Sandy brown fabric, white slip, light green glaze on int., brown bands on rim	Avissar and Stern 2005:19, Type I.1.6, Fig. 7:2
7	Bowl	31	1045/9	Orange-brown fabric, patterned white slip, transparent yellow glaze on int.	Avissar and Stern 2005:19, Type I.1.6.2, Fig. 7:2, Pl.VI:3
8	Bowl	82	1363/8	Brown fabric, white slip, green glaze on int. and rim, brown and green bands on rim	As No. 2
9	Bowl	54	1118/1	Brown fabric, brown and greenish white glazed bands on int., brown glaze spots on ext.	As No.2
10	Bowl	69	1182/1	Brown fabric, white slip, yellow glaze int. and on rim, wavy incisions between diagonal bands	Avissar and Stern 2005:16, Type I.1.5.1, Fig. 6:1–4; Pl. V:1–3
11	Bowl	75	1223/21	Brown fabric, white slip, yellow glaze, brown bands and incisions on int., brown drips on ext. rim	As No. 10
12	Bowl	n/a	1568/1	Brown fabric, small white grits, white slip, yellow glaze with brown bands on int., brown drips on ext.	Avissar and Stern 2005:16, Type I.1.5.1; Fig. 6:6–7; Pl. V
13	Lamp	n/a	n/a	Cooking ware fabric, brown glaze	Avissar and Stern 2005:124, Type III.1.1, Fig. 52:1–4

[i] n/a = not available.

Sgraffito Ware Bowls.— These bowls are similar in fabric, form, glaze and slip to the monochrome glazed bowls, but they are decorated with an incised design made with a pointed tool. The finely incised designs include mainly straight or wavy lines. The bowls from Merot are either slightly carinated (Fig. 10:10, 11), or have a rounded profile with a simple rim (Fig. 10:12). The bowls with fine sgraffito incisions were dated to the thirteenth century CE (Avissar and Stern 2005:16), their dating since extended throughout the Mamluk period (Stern 2014:89).

Glazed Saucer Lamp with Slip-Painted Decoration.— A complete wheel-made saucer lamp with a brown glaze similar to the cooking pots (Fig. 10:13). These lamps are characteristic of the Crusader period.

Glazed Cooking Wares

Baking Dish.— A baking dish with thick walls, an out-turned rim and a glossy thick mustard brown glaze on the interior (Fig. 11:1). Such baking dishes are common in the Galilee and Golan in the fourteenth and fifteenth centuries CE (Stern 2014:82–83).

Cooking Pots.— Thin-walled globular neck-less cooking pots have horizontal strap handles, a dark purple-brown glaze covering the interior base and splashes of glaze over the body (Fig. 11:2, 3). The glaze does not always appear on small sherds. The pots exhibit different types of rims: one with a thickened rounded rim and slightly carinated shoulders (Fig. 11:2); the other, with an out-turned rim, beveled inward (Fig. 11:3). These pots continue the earliest traditions of the Early Islamic period, and are considered hallmarks of the Crusader period, the former variation common from the beginning to the third quarter of the twelfth century CE, and the latter appearing in the mid-twelfth century and continuing until the mid-thirteenth century CE (Avissar and Stern 2005:91). A sherd of a globular cooking pot with a wide short neck and an everted ledged rim (Fig. 11:4) is characteristic of the Galilee and Golan in the fourteenth and probably also the fifteenth centuries CE (Avissar and Stern 2005:92; Stern 2014:83). These cooking pots are glazed on the interior base with splashes over the body.

Jars

Tall-Necked Jar.— The upper part of an amphora, with a thick out-folded rim and a high cylindrical wide-ribbed neck (Fig. 11:5). The handles are attached from mid-neck to shoulders. Table amphorae like this appear in the twelfth or thirteenth centuries CE.

Molasses Jar.— Tear-shaped jars, with no neck and a thickened rim, made of light brown clay (Fig. 11:6), are common in the twelfth and thirteenth centuries CE.

Lids

Such lid fragments (Fig. 11:7–9) are common in the Mamluk and Ottoman periods.

Handmade Vessels

Handmade Bowls and Basins.— The sherd of a large deep bowl has an almond-like rim (Fig. 11:10). Handmade gray ware bowls and basins are characteristic of the pottery repertoires of Galilee, Golan and the Jordan Valley from the late Byzantine period onward. Parallels to this vessel date from the eleventh through the fourteenth century CE. A large deep basin, with two thumb-impressed handles made of brown clay with a gray core and many voids left by organic temper (Fig. 11:11), is a common form of the Crusader to Ottoman period.

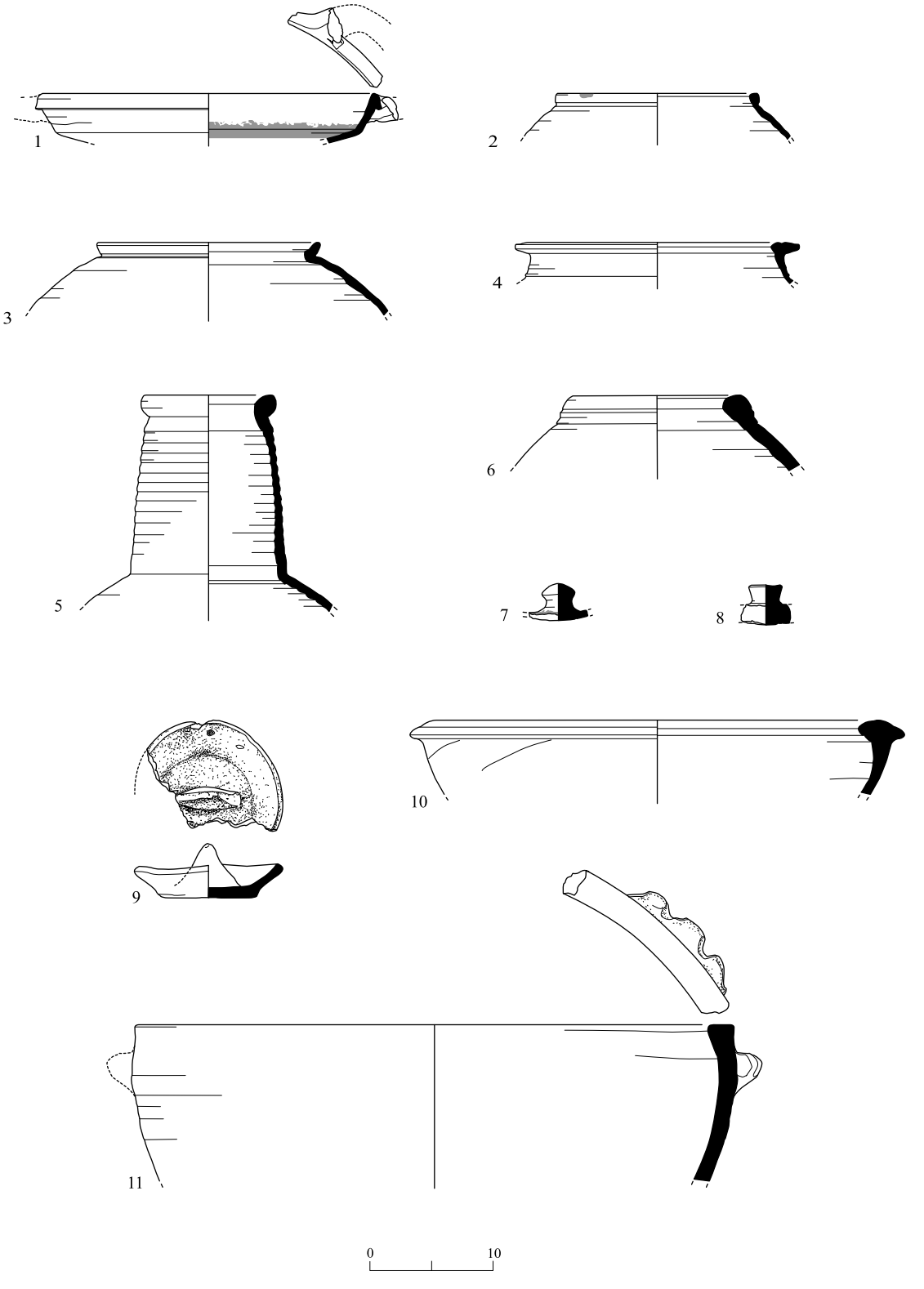

Fig. 11. Pottery from disturbed contexts: Crusader, Ayyubid and Mamluk-period cooking vessels, jars, lids and handmade bowls.

◂ **Fig. 11**

No.	Vessel	Locus[i]	Basket	Description	Parallels
1	Baking dish	110	1512/13	Dark brown fabric, mustard brown glaze on int.	Avissar and Stern 2005:96–97, Type II.2.3.4, Fig 41:6, 7 Khirbat Dinʿila: Stern 2014:82–83, Fig. 6:7
2	Cooking pot	88	1381	Sandy brown fabric, brown glaze drips on rim	Avissar and Stern 2005:91, Type II.2.1.1, Fig. 39:1
3	Cooking pot	Surface	101/1	Sandy reddish-brown fabric	Avissar and Stern 2005:91, Type II.2.1.2, Fig. 39:2, 3; Pl. XXVI:1
4	Cooking pot	65	1217/21	Sandy orange-brown fabric	Avissar and Stern 2005:92, Type II.2.1.5, Fig 39:9–11 Khirbat Dinʿila: Stern 2014:83, Fig. 6:13
5	Jar	73	1206/1	Orange-brown fabric,	Avissar and Stern 2005:106, Type II.3.2.4, Fig. 44:6–11 Tiberias: Stern 2013:190, Fig. 12:2
6	Molasses jar	127	1550/2	Light brown fabric	Avissar and Stern 2005:103, Type II.3.1, Fig. 43:1
7	Lid	75	1264/6	Handmade, brown fabric, small white grits	
8	Lid	78	1318/3	Handmade, orange-brown fabric, small white grits	
9	Lid	136	1598	Sandy pink-brown fabric	
10	Large bowl	127	1550/1	Handmade, gray-brown fabric, gray core	Khirbat Dinʿila: Stern 2014:73, Fig. 2:9
11	Large bowl	n/a	1363/22	Handmade, brown fabric, gray core	Avissar and Stern 2005: Fig. 38:1

[i] n/a = not available.

Handmade Red-Burnished Jugs and Juglets.— Two almost complete handmade vessels, both coated with red slip and a careless hand-burnish (Fig. 12:1, 2). The juglet (Fig. 12:1) has a biconical body and a flat base, with a wide neck and one or two handles attached to the shoulder. The jug has a globular body, a shallow ring base and a wide neck (Fig. 12:2). Burnished, red-slipped handmade jugs are not common in the area in this period. A pottery ware family in the Middle Nile in Egypt shares similar characteristics, although it would be unusual to find sloppy handmade vessels from so far away. The Egyptian vessels are dated in general to the Islamic period (Phillips 2004). The vessels from Merot may have been locally made, influenced by the Egyptian prototypes.

Handmade Jugs and Jars with Geometric Painted Decoration.— These large and small handmade jars and jugs are characterized by geometric patterns painted over a whitish buff, or occasionally an orangey or reddish slip, usually burnished. The geometric patterns are

painted in red, purple or black. A few almost complete jars have globular bodies, out-flaring necks with two handles attached from mid-neck to shoulder, and extremely worn decoration (Fig. 12:3–5). Some shoulder sherds exhibit elaborate geometric patterns (Fig. 12:6–9). This ware first appeared at the end of the twelfth century CE, its *floruit* was in the thirteenth and fourteenth centuries CE, and it continued in the Ottoman period, when the decorative technique deteriorated (Avissar and Stern 2005:113).

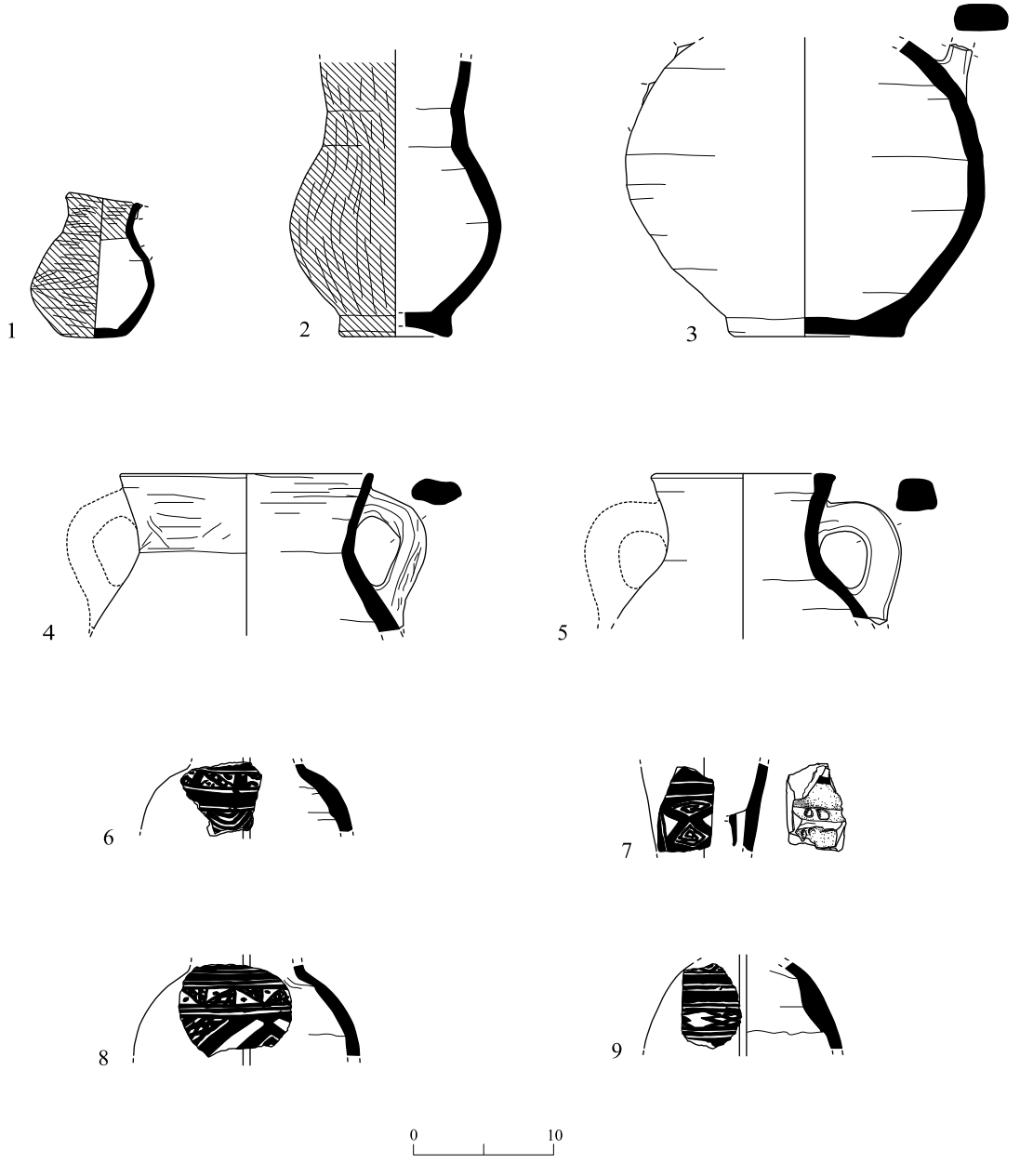

Fig. 12. Pottery from disturbed contexts: Crusader, Ayyubid and Mamluk-period handmade jugs, juglets and jars.

◂ **Fig. 12**

No.	Vessel	Locus	Basket	Description	Parallels
1	Juglet	33	1240/1	Handmade, reddish brown fabric, horizontal hand-burnishing ext.	
2	Jug	30	1040/1	Handmade, reddish brown fabric, gray core, vertical hand-burnishing ext.	
3	Jar	22	1309/1	Handmade, brown fabric, thick black core, worn decoration	Avissar and Stern 2005:113–116, Type II.4.4, Fig 47:8, Pl. XXXI
4	Jar	23	1221/12	Handmade, orange-brown fabric, black core, worn brown-red geometric painted decoration on orange slip, remains of strainer inside the neck	As No. 3
5	Jar	82	1363/5	Handmade, sandy red-brown fabric, thick black core, few small white grits, worn decoration	As No. 3
6	Jug	65	1272/9	Handmade, orange-brown fabric, thick black core, brown-red geometric painted decoration on white slip	Avissar and Stern 2005:113–116, Type II.4.4.1, Fig 47:1–4; Pl. XXXI
7	Jug	24	1015/16	Handmade, dark brown fabric, black core, brown-red geometric painted decoration on orange slip	As No. 6
8	Jug	63	1203/10	Handmade, gray fabric, thick black core, brown-red geometric painted decoration on orange slip	As No. 6
9	Jug	30	1029	Handmade sandy red-brown fabric, thick black core, white grits	As No. 6

The Ottoman Period

Jar.— This almost complete globular jar has a flat base, a wide vertical neck with an out-folded rim and two handles attached from mid-neck to shoulder; it is decorated with two bands of multiple combed lines on the lower neck and shoulder (Fig. 13:1). It is dated to the Ottoman period.

Tobacco Pipes.— Two tobacco-pipe bowl fragments with incised decoration, common in Late Ottoman-period contexts (Fig. 13:2, 3).

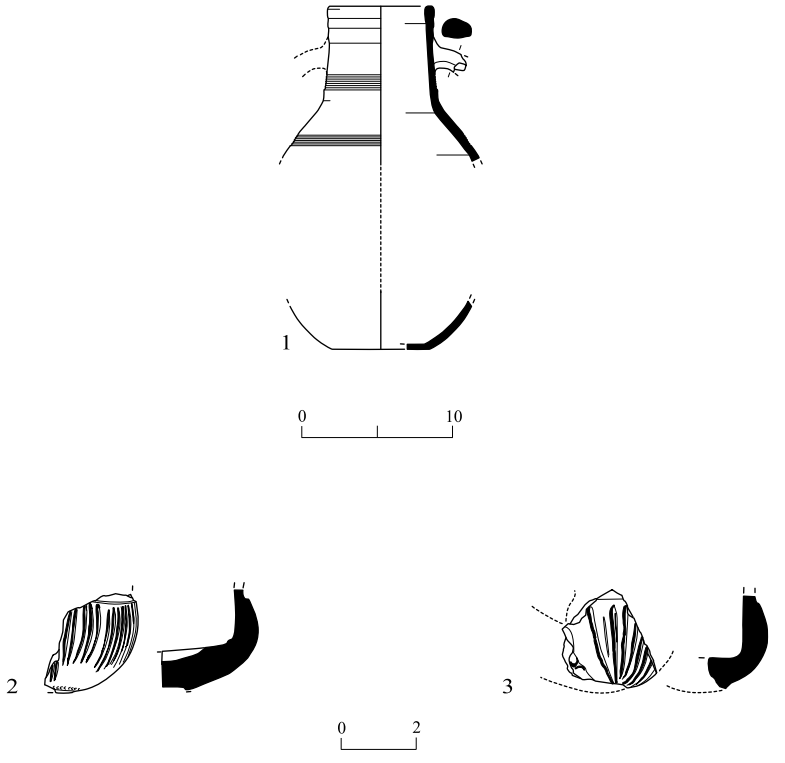

Fig. 13. Pottery from disturbed contexts: Ottoman-period jar and tobacco pipes.

No.	Vessel	Locus	Basket	Description
1	Jar	22	1309/3	Dark brown fabric, small white grits
2	Tobacco pipe	22	1002/24	Orange fabric, decorated with incised lines
3	Tobacco pipe	138	1592	Gray-brown fabric, burnished, decorated with incised lines

Conclusions

The excavations at Merot yielded a large amount of pottery dating from the Roman to the Ottoman period. The provenance of the sherds was often uncertain, and no quantitative analysis was possible. Nonetheless, the study of the pottery indicates that the site was occupied in the Early Roman, Roman, Byzantine, Early Islamic, Crusader, Ayyubid, Mamluk and Ottoman periods. Whilst no significant chronological gaps were observed in the pottery repertoires, the nature of the material does not permit an unequivocal claim for continuous, uninterrupted occupation at the site.

The pottery assemblage that came from clearly defined loci below the Stratum II Phase 2 stone-paved floor included some common fifth-century CE forms, thus providing a *terminus post quem* for the laying of the floor. The Umayyad-period flask found inside the niche below the Bet Midrash floor supports dating Stratum II Phase 3 of the synagogue after the earthquake of 749 CE.

The pottery from all the periods is the contemporary common domestic pottery in Galilee, mostly of local production. It is noteworthy that apart from some common imported pottery vessels in the Byzantine period, most of the vessels, including the glazed vessels from the Early Islamic periods, are local or regional products.

References

Adan-Bayewitz D. 1993. *Common Pottery in Roman Galilee: A Study of Local Trade*. Ramat Gan.

Adan-Bayewitz D. and Perlman I. 1990. The Local Trade of Sepphoris in the Roman Period. *IEJ* 40:153–172.

Adan-Bayewitz D. and Wieder M. 1992. Ceramics from Roman Galilee: A Comparison of Several Techniques for Fabric Characterization. *JFA* 19:189–205.

Avissar M. 1996. The Medieval Pottery. In A. Ben-Tor, M. Avissar and Y. Portugali. *Yoqneʿam* I: *The Late Periods* (Qedem Reports 3). Jerusalem. Pp. 75–172.

Avissar M. and Stern E. 2005. *Pottery of the Crusader, Ayyubid, and Mamluk Periods in Israel* (IAA Reports 26). Jerusalem.

Balouka M. 2013. Roman Pottery. In E.M. Meyers and C.L. Meyers eds. *The Pottery from Ancient Sepphoris* (Duke Sepphoris Excavation Reports I). Winona Lake. Pp. 13–129.

Bar-Nathan R. 2011. The Pottery Corpus. In R. Bar-Nathan and W. Atrash. *Bet She'an* II: *Baysān; The Theater Pottery Workshop* (IAA Reports 48). Jerusalem. Pp. 229–343.

Berlin A. and Stone P.J. 2022. Hula Valley Spatter Painted Ware. *The Levantine Ceramics Project*. https://www.levantineceramics.org/wares/140-hula-valley- (accessed December 9, 2022).

Bijovsky G. This volume. The Coins from the Synagogue at Ḥorbat Merot, Upper Galilee.

Damati E. This volume. The Synagogue at Ḥorbat Merot: Its Construction Phases and a New Interpretation of the Finds.

Gärtner Y. and Leibner U. 2018. Oil Lamps. In U. Leibner. *Khirbet Wadi Ḥamam: A Roman Period Village and Synagogue in the Lower Galilee* (Qedem Reports 13). Jerusalem. Pp. 416–440.

Hadad S. 2002. *The Oil Lamps from the Hebrew University Excavations at Bet Shean* (Qedem Reports 4). Jerusalem.

Hayes J.W. 1972. *Late Roman Pottery*. London.

Johnson B.L. 1988. The Pottery. In G.D. Weinberg. *Excavations at Jalame: Site of a Glass Factory in Late Roman Palestine*. Columbia, Mo. Pp. 137–226.

Kapitaikin L.A. 2018. Final Pottery Report of the 2010–2011 Excavation Seasons. In M. Eisenberg. *Hippos-Sussita of the Decapolis: The First Twelve Seasons of Excavations 2000–2011* II. Haifa. Pp. 88–209.

Leibner U. 2018. The Pottery. In U. Leibner. *Khirbet Wadi Ḥamam: A Roman Period Village and Synagogue in the Lower Galilee* (Qedem Reports 13). Jerusalem. Pp. 304–401.

Magness J. 1993. *Jerusalem Ceramic Chronology: Circa 200–800 CE* (*JSOT*/ASOR Monograph Series 9). Sheffield.

Osband M. and Eisenberg M. 2018. Summary of the Pottery Finds. In M. Eisenberg. *Hippos-Sussita of the Decapolis: The First Twelve Seasons of Excavations 2000–20*11 II. Haifa. Pp. 210–275.

Phillips J. 2004. Islamic Pottery in the Middle Nile. *Azania: Archaeological Research in Africa* 39:58–68. DOI: 10.1080/00672700409480387

Rosenthal R. and Sivan R. 1978. *Ancient Lamps in the Schloessinger Collection* (Qedem 8). Jerusalem

Stacey D. 2004. *Excavations at Tiberias, 1973–1974: The Early Islamic Periods* (IAA Reports 21). Jerusalem.

Stern E.J. 2013. Crusader, Ayyubid and Mamluk-Period Remains from Tiberias. *ʻAtiqot* 76:183–208.

Stern E.J. 2014. The Crusader, Mamluk and Early Ottoman-Period Pottery from Khirbat Dinʻila: Typology, Chronology, Production and Consumption Trends. *ʻAtiqot* 78:71–104.

Sussman V. 2017. *Late Roman to Late Byzantine/Early Islamic Period Lamps in the Holy Land: The Collection from the Israel Antiquities Authority*. Oxford.

Vincenz A. de. 2013. Fine Wares; Byzantine–Early Islamic Wares. In E.M. Meyers and C.L. Meyers eds. *The Pottery from Ancient Sepphoris* (Duke Sepphoris Excavation Reports I). Winona Lake. Pp. 142–227.