'Atiqot 109, 2022

A Late Ottoman Ceramic Assemblage from the Harbor Area, Yafo (Jaffa)

Anna de Vincenz

Introduction and Methodology

The ceramic material discussed here was retrieved from two excavations carried out in the Yafo Harbor area and adjacent buildings (see Haddad and Glick, this volume).[1] Most of the ceramic artefacts can be dated to the Late Ottoman period, from the eighteenth to the beginning of the twentieth century. The Ottoman material consists of hard-paste ware, porcelain and stoneware vessels, such as plates, bowls, coffee cups and bottles, which were imported mainly from Europe. In addition, there are glazed earthenware vessels imported from Turkey and Greece, and glazed cooking pots imported from southern France. Black Gaza Ware and other coarse ware vessels were locally produced. Ottoman clay smoking pipes of the eighteenth and nineteenth centuries were found abundantly in the excavation, while only a few narghile heads were recovered. The assemblage also includes a large quantity of roof tiles produced in the factories in and around Marseille.

The Ottoman material was classified according to the typology created during the study of the Ottoman ceramic material from the Qishle excavations at Yafo (Vincenz 2021b; for methodology see Vincenz 2002c). New types were added as necessary, especially in the Gaza Ware and the coarse wares, which had received less attention during the study of the Qishle material. The ceramics are presented typologically, and were selected from well-stratified contexts, apart from some fragments which are of typological importance.

Earlier ceramic material, similar to pottery retrieved from excavations in other parts of Yafo, was recovered in several, mainly deeper fills; it is presented at the end of this report, as it was not found in architectural contexts.

[1] I wish to thank Elie Haddad and Alexander Glick, for asking me to publish the material from these excavations. The drawings were done by Marina Shuiskaya and the photographs, by Clara Amit. I am grateful to both.

THE LATE OTTOMAN CERAMICS

HARD-PASTE VESSELS (Fig. 1)

This type of ceramic ware, also called creamware, was invented in England in the second half of the eighteenth century to compete with porcelain wares (Savage and Newman 2000:88).

Transfer-Printed Wares (Fig. 1:1–3)

The transfer-print technique was invented around the mid-eighteenth century in England, and was especially common in the nineteenth century (Savage and Newman 2000:296). The technique, consisting of printing a pattern from a color-filled copper plate on a ceramic vessel, was a cheap way of producing large quantities of decorated vessels, affordable for a large group of consumers. The transfer-print technique is still employed today.

Transfer-Printed Ware in Blue-on-White
J-TW-PL-1 (Fig. 1:1).— Rim fragment of hard-paste plate with underglaze transfer-print in blue. The design on the rim consists of geometric and floral designs. This specific rim decoration, inspired by Chinese bronzes, has been associated with the standard Willow Pattern, which would have been in the center of the plate (Rogers 2004:10). The Willow Pattern was invented in c. 1760 in England, and the term was originally applied to any Chinese landscape pattern. The standard Willow Pattern was first produced on hard-paste vessels, and only at the end of the nineteenth century, on porcelain. The pattern was mostly produced in blue, imitating Blue-on-White Chinese porcelain, but existed also in red, green, black and brown. It is the most common pattern among the transfer-printed vessels retrieved from Yafo, and was found abundantly in the Qishle excavations (Vincenz 2021b: Fig. 8.1A). Since many English factories produced vessels with the Willow Pattern, without a backstamp, it is virtually impossible to assign the fragment to a specific factory. A dating to the nineteenth or late nineteenth century is suggested.

Transfer-Printed Ware in Red with Floral/Geometric Pattern
J-TW-PL-2 (Fig. 1:2).— Rim fragment of plate with underglaze transfer-printed floral and geometric decoration in red. In 1829–1830, new colors such as red, brown, green and pink were introduced in England. This vessel should be dated to the nineteenth century, but its country of origin is unknown.

Transfer-Printed Ware in Red with Asiatic Pheasants Pattern
J-TW-PL-2 (Fig. 1:3).— Fragment of central part of plate with red underglaze transfer-printed pattern. The motif is an Oriental-inspired scene with large petaled flowers and a Chinese bird with showy plumage. This pattern is called Asiatic Pheasants and was first produced by Podmore Walker & Co. in Tunstall in 1834 (*Asiatic Pheasants: Pattern*

History) ; it was also produced by many other manufacturers in Staffordshire and Scotland (Kowalsky and Kowalsky 1999:471). This plate is probably English, and it should be dated to the later part of the nineteenth century.

Sarreguemines Vessels (Fig. 1:4, 5)

During the eighteenth and nineteenth centuries, the Utzschneider factory in the town of Sarreguemines, France, exported hard-paste and porcelain vessels to the Ottoman Empire. Many bowls and saucers were decorated in a fashion that appealed to the local buyer, for example, with star and half-moon panels (Herrmann 1894–1895: Pl. 92; Herrmann 1905: Pl. 63, décor 898, Col. 7; *Faïencité* 2001: Exportation, Pls. 1, 14: Bd Et 5). These vessels were decorated in the stencil technique, whereby stencils cut out of thin sheets of metal were positioned on the vessel, and the cut-out decoration was filled in with paint (Gauvin and Becker 2007:29–33). The stencil technique was used in Sarreguemines from 1845 onward.

J-SARRE-PL-1A (Fig. 1:4).— Plate with ledge rim, decorated with an underglaze blue pattern of rosettes or stars and half-moons, framed by short lines. The blue background is framed by a brown line. This pattern seems to be the combination of two patterns that appear in the pattern books: the moon comes from the pattern called *décor bande etoilée No. 5*, while the rosette/star is the *décor bande etoilée No. 4* (Faïencité 2001: Exportation, Pl. 1, Bd Et 4, Bd Et 5). Vessels decorated with the *décor bande etoilée No. 5* were also found. These patterns are recorded in the pattern books and decorated plates, bowls and saucers (Gauvin and Becker 2007:211, Pl. 51). This decoration appeared on plates and bowls retrieved from various excavations in Yafo, for example, on Ha-Ẓorfim street (Vincenz, forthcoming [b]: Fig. 5:5), as well as in Magen Avraham (Vincenz 2020b: Fig. 2:6, 10) and the French School on Yefet street (Vincenz 2020a: Fig. 5:4). These plates should be dated to the late nineteenth century.

J-SARRE-PL-3 (Fig. 1:5).— The ledge rim and the upper part of the plate interior are decorated with a floral pattern in stencil technique on a green background. The execution of the pattern is rather coarse, and the green color spilled into the pattern. The rather coarse, unskilled execution might point to a fairly early date of production, or maybe it was just made by an unskilled worker. Similar floral décors can be found in two *Carnets de Décor* (Herrmann and Herrmann 1895: Pl. 16: *décor à bande épongée No. 69*; 1905: Pl. 10: *décor No. 591*). The fragment should thus be dated from the late nineteenth to the early twentieth centuries.

Handpainted Flow Blue Ware

Around 1820, English factories such as those in the Staffordshire area, started producing Flow Blue, a special type of ware where the blue color was blurred to achieve a soft effect

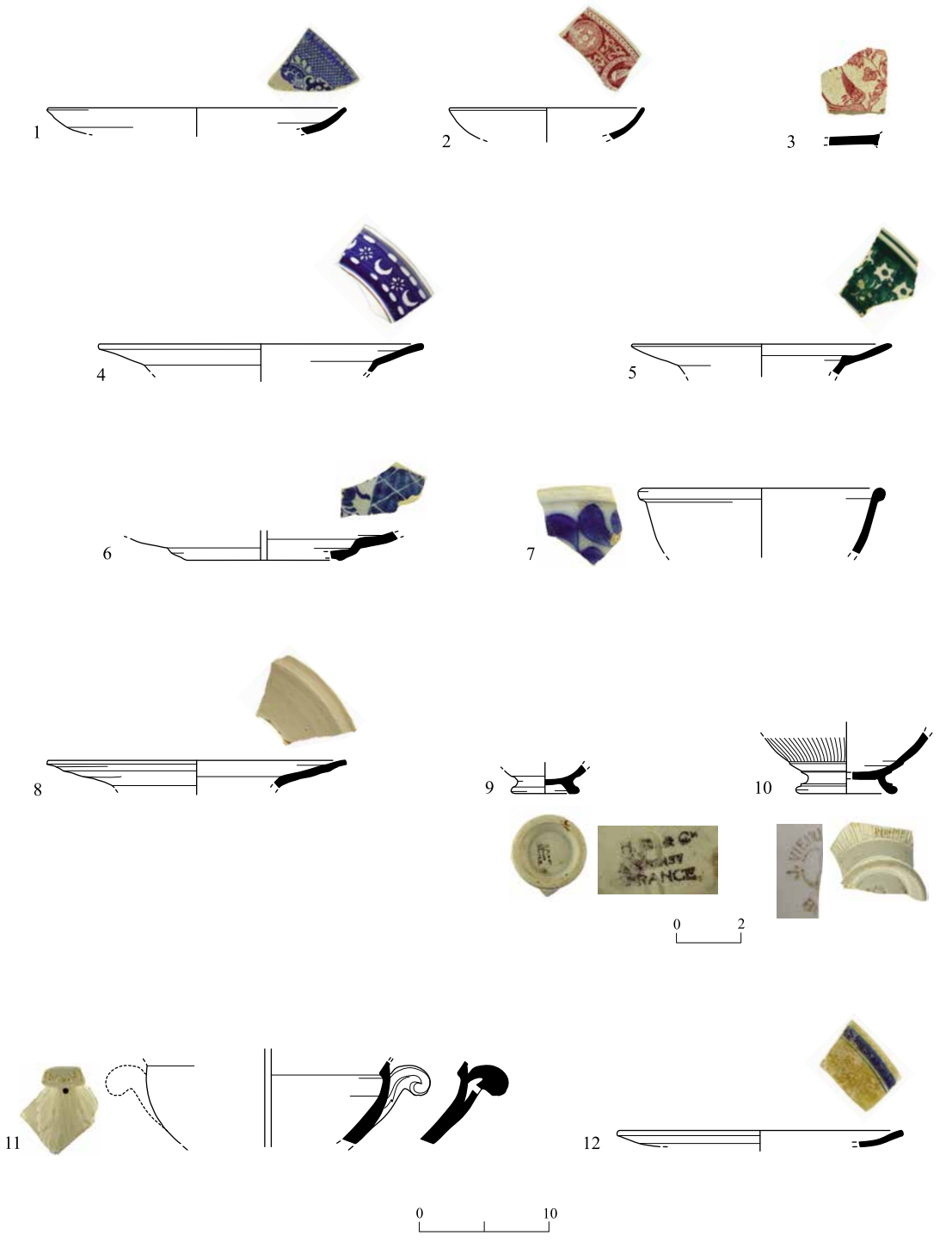

Fig. 1. Late Ottoman ceramics: hard-paste vessels.

◂ **Fig. 1**

No.	Vessel Type	Locus	Basket	Dimensions (cm)[i]	Ware and Decoration
1	Plate (J-TW-PL-1)	778	7187/2	Diam. 20 Rim 6%	White hard-paste with blue underglaze transfer decoration; Willow Pattern
2	Plate (J-TW-PL-2)	120	1063	Diam. 16 Rim 9%	White hard-paste with red underglaze transfer decoration
3	Plate (J-TW-PL-2)	818	8038/2	n/a	White hard-paste with red underglaze transfer decoration; Asiatic Pheasants
4	Plate (J-SARRE-PL-1A)	910	80294/1	Diam. 26 Rim 8%	White hard-paste with half-moons and rosettes/stars in stencil technique on blue background and brown lines; Sarreguemines Bande etoilée No. 4/5
5	Plate (J-SARRE-PL-3)	818	80355/1	Diam. 22 Rim <5%	White hard-paste with floral pattern in stencil technique on green background; Sarreguemines décor à bande épongée No. 69 or 591
6	Plate (J-HP-FB-PL-2A)	900	80259/4	n/a	White hard-paste with blue square pattern; in center scene
7	Bowl (J-HP-FB-BL-1)	874	80171/22	Diam. 22 Rim 7%	White hard-paste with blue floral pattern in flow blue technique; blue line under rim; floral pattern
8	Plate (J-WW-PL-2A)	763	7164/5	Diam. 24 Rim 10%	White hard-paste with thick grayish-white slip
9	Bowl (J-WW-BL-2-Stamp 1)	874	80171/9	n/a	White hard-paste with black underglaze stamp on base: HB & Cie, Choisy, FRANCE
10	Bowl, molded (J-WW-BL-2B-Stamp 2)	892	80242/1	n/a	White hard-paste with black underglaze stamp on base: J. Vieillard and the letters BO
11	Tureen (J-WW-TUR-2C)	104	1034/5	n/a	White hard-paste; molded handle
12	Plate (J-WCB-PL-1A)	937	8385	Diam. 20 Rim 7%	White hard-paste with one wide blue band and one thin blue band around rim; Filet décor No. 96

[i] n/a = not available.

by adding lime or ammonia (volatile chlorides) to the kiln during the final glazing process. The blue pigment would diffuse into the glaze and run into the white body of the vessel, thus creating the effect (Savage and Newman 2000:125; Neale 2005:135). Flow Blue was produced in England, and also in other European porcelain factories such as Petrus Regout & Co. in Maastricht, Holland. This type of decoration was produced especially for the American market where it was very popular.

J-HP-FB-PL-2A (Fig. 1:6).— Plate with ledge rim, decorated with a blue pattern of squares with a scene in the center. No identification of the pattern was possible, but it was probably produced in a European factory in the nineteenth century.

J-HP-FB-BL-1 (Fig. 1:7).— Large bowl with externally rolled rim, decorated with a floral pattern in blue with a blue line under the rim. Similar blue floral patterns were produced by Petrus Regout (*Petrus Regout: Decor 69 3 bis; Petrus Regout: Decor 145 blauw 3 bis*) at the end of the nineteenth and beginning of the twentieth centuries. Similar bowls with polychrome decoration were found at the Greek Market in Yafo (Vincenz, forthcoming [a]: Fig. 8:1–4).

White-Glazed Ware

Undecorated white glazed vessels were mainly used in canteens, hospitals and schools, as they were cheap and affordable. The institutions using these vessels would sometimes add their name or logo to them. It seems that most European factories produced white-glazed wares. Some of these vessels had molded decorations, or *appliqué* handles and knobs.

J-WW-PL-2A (Fig. 1:8).— Ledge rim of plate glazed grayish white, otherwise undecorated. No identification for these plates is possible if the backstamp is not preserved. The suggested date is the nineteenth or early twentieth century.

J-WW-BL-2-Stamp 1 (Fig. 1:9).— This ring base of a bowl bears an underglaze printed backstamp with the letters: HB & Cie, Choisy, FRANCE. The bowl was made by a French manufacturer from Choisy-Le-Roi. The initials HB refer to Hyppolite Boulenger, director between 1878 and his death in 1892, and the stamp FRANCE indicates a date after 1891, since the country of production only rarely appeared before that date (*Faiences Histoire:* VIII.5).

J-WW-BL-2B-Stamp 2 (Fig. 1:10).— The ring base of this molded bowl bears an underglaze backstamp: J. Vieillard and the letters BO. Jules Vieillard was director of the faïence factory in Bacalan, near Bordeaux from 1845 onward, the factory closing in 1895.

J-WW-TUR-2C (Fig. 1:11).— White-glazed vegetable or stew tureen. The handles are molded in the shape of a leaf and have a hole below, possibly to keep the air circulating, or to keep the handle cool when serving. Various English manufacturers produced such vessels with molded handles and knobs in white-glazed ware between c. 1850–1860 (for example, *Davenport: Tureen*). The Utzschneider factory in Sarreguemines produced vegetable tureens with similar handles (*Faïencité* 2001: Articles courants, Pl. 11:128, 129), as well as soup tureens (*Faïencité* 2001: Articles courants, Pl. 28). The fragment should be dated from the late nineteenth to early twentieth century.

White-Glazed Vessels with Colored Bands

A simple and cheap way to decorate plates and bowls was the use of colored bands. These bands were applied with a brush that was divided into several thinner and thicker brushes. The brushes were charged with color, which was applicated to the vessel while the plate was turning on the wheel. This procedure, simple as it sounds, required a certain skill, as the desired effect was achieved when the junction between the lines was invisible (see Gauvin and Becker 2007:20–21).

J-WCB-PL-1A (Fig. 1:12).— The ledge rim of a plate decorated in underglaze with a thick and thin blue-painted band on the rim. Without the backstamp, it is hard to assign it to a specific factory. The Utzschneider factory, for example, produced plates with bands in various colors (*Faïencité* 2001: Exportation, Pl. 13). Petrus Regout of Maastricht produced plates decorated with thin and thick bands in multiple colors and color combinations. The light blue bands were called *filet décor No. 96* (*Petrus Regout: Filet Décor*). This type of decoration was long-lived from the eighteenth to the early twentieth century.

Coffee Cups and Cups (Fig. 2)

Turkish-style coffee cups without handles, and European style tea and coffee cups, are grouped together here. Many Turkish-style coffee cups were produced mainly in German factories and exported to the Ottoman Empire (for a discussion of coffee cups, see Vincenz 2020b:305–309). Other cups were produced in German, English or French factories. Without a backstamp indicating the factory, their provenance can only be guessed.

Porcelain Coffee Cups

J-CC-1A (Fig. 2:1).— Small coffee cup made of rather thick porcelain, decorated with a cobalt blue underglaze-painted, stylized floral pattern and a band on the interior below the rim. This type of cup was produced in Europe and mainly in Germany and is commonly called "Koppchen". During the eighteenth century, porcelain manufacturers such as Meissen produced these cups for the Turkish market (Röntgen 1996:259). Their production continued into the nineteenth century.

J-CC-4D (Fig. 2:2).— Small coffee cup made of porcelain, facetted and painted with underglaze green and golden drops. A golden band is painted under the inner and outer rim. A European provenance can be assumed, and it should be dated to the nineteenth century.

Porcelain Cup

J-WW-CUP-1B (Fig. 2:3).— Deep undecorated spiral molded porcelain coffee or teacup. Fluted and spiral molded cups were quite common during the late nineteenth and early twentieth centuries, and were produced by various factories in Europe. The Utzschneider

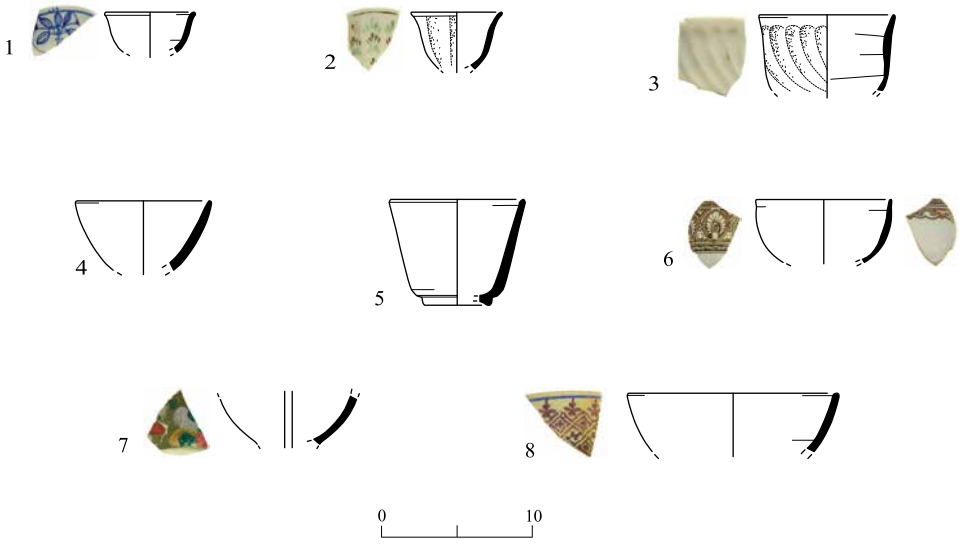

Fig. 2. Late Ottoman Ceramics: Coffee cups and other cups.

No.	Vessel Type	Locus	Basket	Dimensions (cm)[i]	Ware and Decoration
1	Coffee cup (J-CC-1A)	103/1	1086	Diam. 6 Rim 22%	White porcelain with blue underglaze floral pattern and line under rim
2	Coffee cup (J-CC-1D)	778	7187	Diam. 6 Rim 20%	White porcelain with green and gold drops and gold line under rim
3	Cup (J-WW-CUP-1B)	944	8420	Diam. 8 Rim 17%	White porcelain
4	Cup (J-WW-CUP-2A)	818	80320/2	Diam. 8 Rim 20%	White hard-paste paste
5	Cup (J-WW-CUP-2A)	918	80319/1	Diam. 10 Rim 5%	White hard-paste
6	Cup (J-TW-CUP-4)	937	8430	n/a	White hard-paste with brown transfer decoration; Tancrede Pattern
7	Cup (J-MAR-CUP-1)	103/2	1085	n/a	White soft paste; polychrome decoration (marble effect)
8	Cup with round rim (J-KÜT-CUP)	881	80180/2	Diam. 12 Rim 12%	White soft paste; light blue line under rim; purple geometric pattern

[i] n/a = not available.

factory produced many different shapes such as *forme Marie-Antoinette*, which is similar to this cup (*Faïencité* 2001: Articles courants, Pl. 40:444). The Royal Derby factory in England also produced fluted tea and coffee cups such as *forms Burford* and *Fluted* (*Royal Derby: Cup Shapes*).

White Ware Cups

J-WW-CUP-2A (Fig. 2:4, 5).— White glazed undecorated cups. The first has flaring walls (Fig. 2:4) and could thus be a teacup, as teacups were usually wider than coffee cups (for

shapes, see *Royal Albert: Cup Shapes*). The second cup (Fig. 2:5) is rather deep with a ring base. It is also plain white glazed. Similar cups were produced by the Utzschneider factory (*Faïencité* 2001: Articles courants, Pls. 37: 415, 418; 42:462; 43:471, 472). The deep shape of the cup suggests it was used for coffee rather than for tea. Both cups should be dated to the nineteenth to early twentieth century.

Cup with Transfer Printed Decoration

J-TW-CUP-4 (Fig. 2:6).— Fragment of a rounded cup with brown underglaze transfer decoration. The pattern consists of anthemions (*Anthemion*). The inner rim is also decorated with a stylized leaf scroll. Transfer ware in blue, red, green, black and brown became fashionable in England around the mid-nineteenth century, especially in the region around Staffordshire. Vessels with a similar decoration were produced by Spode, and were known as *honeysuckle and empire* pattern (*Blue and White Museum: Honeysuckle Spode*) and dated to the end of the nineteenth century. The Société Céramique de Maestricht produced a brown décor called *Tancrede*, which is quite similar (cf. Carter 2011:204, QNM.664 CE.19) and is dated to 1880.

Cup with Marbled Pattern

J-MAR-CUP-1 (Fig. 2:7).— Cup made of hard-paste ware and decorated on the outside with underglaze paint with a marbled effect: olive-green, pale lilac, pink and dark yellow. The interior is not decorated. The art of marbling was common in Turkey in decorating paper, but it was also used for decorating other materials, such as wood, tiles, glass and ceramics (Başar and Tiryaki 2000:3). The cup could have been made in the Ottoman Yildiz porcelain factory, although no satisfactory parallel was found. The Utzschneider factory also produced painted bowls with a marbled effect (Herrmann and Herrmann 1905–1923: Pls. 97: *décors 3578 Marbre, 3579, 3653*; 104: *décors Marbre 131*). In the bowls made by Utzschneider, the lower part of the bowl remains undecorated, a feature visible in this fragment. It can thus be suggested that our fragment was indeed made in that factory and should be dated to 1905–1923.

Kütahya Ware Soft-Paste Cup

J-KÜT-CUP (Fig. 2:8).— Large deep cup made of soft-paste. The exterior of the vessels is decorated with a painted purple geometric pattern and palmettes. A blue line is painted under the outer and inner rim. Purple appears in the Kütahya repertoire only after 1740, so this example must date later (Carswell 1972:34).

Glazed Earthenware Vessels (Figs. 3–7)

Apart from the hard-paste, porcelain and soft-paste vessels discussed above, a large quantity of glazed earthenware vessels was found in the excavation. Several imported groups have been identified: drip-painted vessels from Greece or Turkey (Fig. 3), vessels from

Çanakkale in Turkey (Fig. 4) and marbled wares from workshops in Greece or Turkey (Fig. 5). Cooking pots were imported from southern France and Italy (Fig. 6). The last group of earthenware vessels is the monochrome glazed, or slip-painted and glazed wares (Fig. 7), whose provenance is still unestablished. They may have either been imported from one of the countries in the Ottoman Empire or they may have been produced locally. Provenance studies and petrographic analysis could shed light on this issue.

Drip-Painted Ware (Fig. 3)

A distinctive group of Drip-Painted Wares, glazed either green or ochre-yellow, is very common at sites dated to the Ottoman period and can be found throughout the region. One of the production centers for this ware was Didymoteicho in Thrace, where several kilns were excavated (Bakirtzis 1980:150–152). Bakirtzis retrieved kiln wasters from the kilns and dated the ceramics to the early nineteenth century. Other production centers producing this ware have been identified at Ganos, situated close to Didymoteicho (Armstrong and Günsenin 1995). This vessel type was also produced at Çanakkale (Tekkök 2011: Figs. 2a–b). The excavations at the Agora of Izmir produced a large quantity of ceramics manufactured at Çanakkale (Doğer 2008:25–33). Among these ceramics are also Drip-Painted Wares, which the author claims were produced in Çanakkale (Doğer 2008:32, Tab. III). In the excavations of the Saraçhane Mosque in Istanbul, this ware was found together with Kütahya and Çanakkale wares, and it was dated by Hayes to 1860–1880 (Hayes 1992:271, 276, Pl. 51h).

This ware has been found at many sites in Yafo, such as at the Qishle (Vincenz 2021b: Type J-DRIP). Petrological analysis has shown that many of the Yafo vessels were not produced at Didymoteicho, but at some other, yet unidentified center. This center mixed salt or brackish water into the clay, and thus was probably situated near the sea. It is quite possible that the vessels from Yafo were imported, for example from Çanakkale, as shown by recent analyses (Vincenz 2021a).

Green-Glazed Plates

J-DRIP-PL-1A (Fig. 3:1–3).— Plates with folded rim creating a small flange. The interior and flange are decorated with drip-painted patterns using a whitish slip and are subsequently glazed with a transparent green glaze of various shades of green, from bright green to darker green and olive green, appearing darker on the parts of the vessel without slip.

J-DRIP-PL-1B (Fig. 3:4, 5).— Plates with a ledge rim thickened on the lower part. As in the previous type, the slip is applied on the vessel in dripped patterns and glazed with a transparent green glaze.

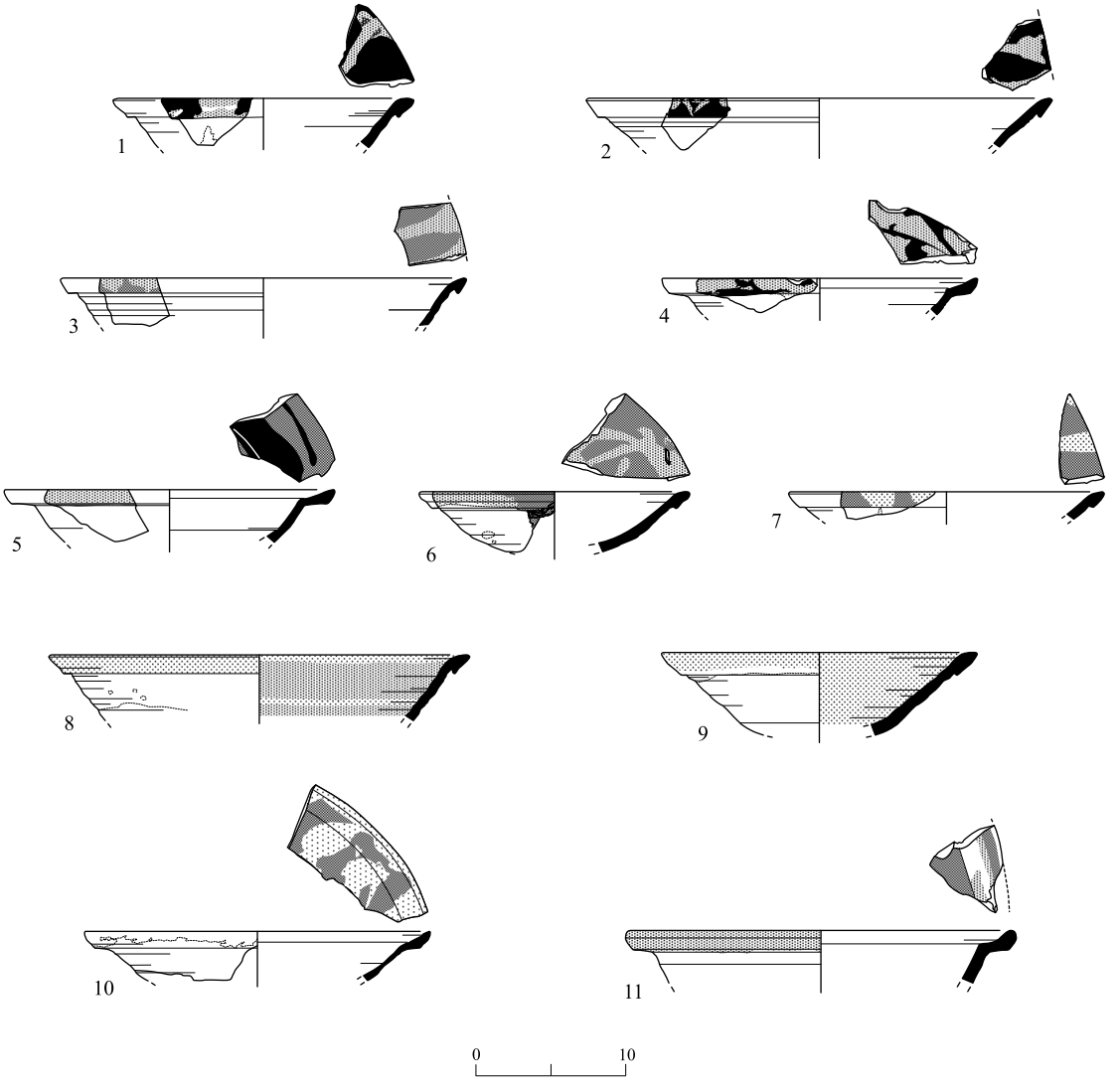

Fig. 3. Late Ottoman Ceramics: Drip-Painted Ware.

Yellow-Glazed Plates

J-DRIP-PL-2A (Fig. 3:6–9).— These plates have a folded rim as the plates of Type 1A. The same drip-painted technique decorates the interior and flange of the vessels. They are glazed with a transparent bright yellow or ochre yellow glaze.

J-DRIP-PL-2B (Fig. 3:10, 11).— These two drip-painted plates, glazed with a transparent yellow glaze, have an upturned ledge rim, the latter appearing slightly hooked.

◂ **Fig. 3**

No.	Vessel Type	Locus	Basket	Dimensions (cm)	Description
1	Plate (J-DRIP-PL-1A)	874	80171/13	Diam. 18 Rim 12%	Light red ware (2.5YR 6/6) with few small white inclusions; white drip-painted under transparent bright green glaze
2	Plate (J-DRIP-PL-1A)	910	80294/3	Diam. 24 Rim 5%	Light red ware (10R 6/8) with few small black inclusions; white drip-painted under transparent bright green glaze
3	Plate (J-DRIP-PL-1A)	944	8420	Diam. 24 Rim 5%	Light red ware (10R 6/8) with few small black inclusions; white drip-painted under transparent bright green glaze
4	Plate (J-DRIP-PL-1B)	874	80171/17	Diam. 22 Rim 10%	Light red ware (2.5YR 6/6) with few small white inclusions; white drip-painted under transparent bright green glaze
5	Plate (J-DRIP-PL-1B)	874	80171/15	Diam. 20 Rim 10%	Light red ware (2.5YR 6/6) with few small white inclusions; white drip-painted under transparent bright green glaze
6	Plate (J-DRIP-PL-2A)	874	80171/6	Diam. 18 Rim 13%	Light red ware (10R 6/6): 10R 6/6 light red; white drip-painted under transparent yellow glaze
7	Plate (J-DRIP-PL-2A)	158	1058/1	Diam. 24 Rim: 7%	Light red ware (2.5YR 7/8) with few small angular black inclusions; white drip-painted decoration under yellow transparent glaze.
8	Plate (J-DRIP-PL-2A)	898	80209/2	Diam. 26 Rim 12%	Light red ware (2.5YR 6/6) with few small white inclusions; white drip-painted under transparent yellow glaze
9	Plate (J-DRIP-PL-2A)	918	80320/3	Diam. 22 Rim 15%	Pink ware (7.5YR 7/4) with few small black inclusions; white drip-painted under transparent yellow glaze
10	Plate (J-DRIP-PL-2B)	912	80354/2	Diam. 22 Rim 17%	Light red ware (2.5YR 6/6) with few small white inclusions; white drip-painted under transparent yellow glaze
11	Plate (J-DRIP-PL-2B)	818	8038/3	Diam. 22 Rim <5%	Light red ware (2.5YYR 6/6) with few small white inclusions; white drip-painted under transparent yellow glaze

Çanakkale Ware (Fig. 4)

Pottery production in the town of Çanakkale (in Turkish: 'the bowl-shaped fortress'), situated in the Troad region on the Dardanelles, began after the construction of the city walls in 1659 (see Tekkök 2011:227). In the town there was an entire quarter called *Çanakadika* or *Tsanakadika*, where the workshops of Turkish and Greek potters were located (see François 1994:382; Vroom 2003:180). The multi-ethnicity of the city's population, attested since the eighteenth century, facilitated the distribution of goods, especially pottery, which reached Istanbul, the Marmara and Black Sea regions, the Aegean and Greek islands and the eastern and western Mediterranean (Tekkök 2011:227, with further references therein). The region of Çanakkale and the town itself produced pottery well into the twentieth century. Hayes dated the Çanakkale Ware according to the stratigraphy in the *Saraçhane Cami* to the nineteenth century (Hayes 1992:268, Type II). This type of ware was also found in the excavations of the Agora in Izmir and dated to the nineteenth century (Doğer 2008:29–31, Type II, with additional references therein).

In Yafo, bowls with the characteristic manganese floral decoration painted on white slip were found in rather large quantities; jugs with applied decorations were also found. They have been identified as coming from Çanakkale, although to date, no petrographic analysis has been undertaken. They can be dated from the nineteenth to early twentieth century.

J-ÇAN-BL-3A (Fig. 4:1–3).— Bowl with everted upturned ledge rim ending in a small hook. The bowl is decorated with painted manganese bands on a white slip and under a transparent glaze. The interior of the bowl would have featured a floral pattern.

J-ÇAN-BL-3B (Fig. 4:4).— Bowl with everted upturned ledge rim ending in a small hook. The glaze is transparent ochre in color, differing from Type 3A.

J-ÇAN-BL-3D (Fig. 4:5).— Bowl with everted upturned ledge rim ending in a small hook. The bowl bears white-painted bands applied directly on the ware and is glazed with a colorless transparent glaze. The bowl appears to be similar to Types 3A and 3B and may possibly be a variant.

J-ÇAN-JUG-2A (Fig. 4:6).— Body sherd of jug, green-glazed on the interior with a white painted wavy line and splashes of glaze on the exterior. Mugs painted white on the exterior are shown in the Sunan-Inan Kiraç Collection, and it is possible that our fragment belongs to a similar vessel (Altun 1996:54, Nos. 58–59).

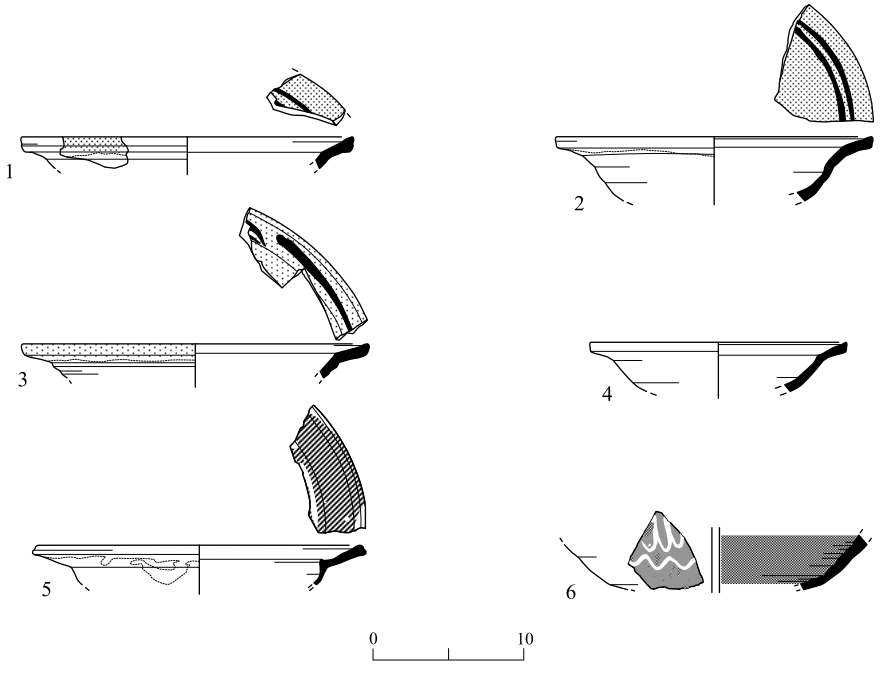

Fig. 4. Late Ottoman Period Ceramics: Çanakkale ware.

No.	Vessel Type	Locus	Basket	Dimensions (cm)[i]	Description
1	Bowl (J-ÇAN-BL-3A)	100	1051	Diam. 22 Rim 6%	Light red ware (2.5YR 6/6) light red with few small white inclusions; manganese painted bands on white slip under transparent glaze
2	Bowl (J-ÇAN-BL-3A)	910	80309/2	Diam. 20 Rim 15%	Light red ware (2.5YR 6/6) with few small white inclusions; manganese painted bands on white slip under transparent glaze
3	Bowl (J-ÇAN-BL-3A)	119	1016/2	Diam. 22 Rim: 17%	Reddish yellow ware (7.5YR 6/6) with few small round black inclusions; manganese painted bands on white slip under transparent glaze
4	Bowl (J-ÇAN-BL-3B)	890	86231/3	Diam. 18 Rim 10%	Light red ware (2.5YR 6/6) with few small white inclusions; coffee brown painted bands on white slip under transparent ochre glaze
5	Bowl (J-ÇAN-BL-3D)	744	7130	Diam. 22 Rim 14%	Red ware (2.5YR 4/8) with few small white inclusions; white painted bands under colorless transparent glaze
6	Jug or mug (J-ÇAN-JUG-2A)	109	1008/3	n/a	Reddish yellow ware (5YR 6/6) with few small round white and large gravel inclusions; exterior with white painted wavy line and splashes of green glaze; interior glazed green

[i] n/a = not available.

Ottoman Marbled (Marmorizzata) and Speckled (Maculata) Wares (Fig. 5)

In one of the buildings excavated in the harbor area, an assemblage of marbled and *maculata* wares was found (see Haddad and Glick, this volume). At first, it was considered that these vessels belonged to an Italian type of Marmorizzata ware,[2] which was produced and exported during the seventeenth century. This, however, was problematic since the majority of the ceramic material retrieved in the excavation was dated to the eighteenth and nineteenth centuries.[3] Unfortunately, no petrographic analysis was possible at the time, but a closer inspection showed that these ceramics were not Italian.[4] Petrographic analysis is necessary here, as also for determining the provenance of the Drip-Painted and the Çanakkale Wares mentioned above. Obviously, the clays of the Ottoman vessels were different from the Italian ones, but this could only be detected by petrographic analysis. The wares were distinguished by their different shapes. The Ottoman group consists of basins with a long, upturned ledge rim, often bearing a small hook at the end, and bowls with high trumpet-bases (Kontogiannis 2015: Fig. 4), while the Italian vessels have flat or down-turned short ledge rims (Moore Valeri 2013:20–21, Fig. 23).

The main difference between the Italian vessels and those from the Ottoman Empire is in the surface treatment. The production process of the Italian wares was rather lengthy and time-consuming. A mixture of two or more colors in a rather watery state was applied over the white slip while it was still moist, the colors mottling together and creating the marbled effect. The vessel was fired for the first time, following which the transparent glaze was applied, and the vessel was fired for the second time, at which stage, additional colors could have been added (see Moore Valeri 2005:188–189; 2013:25–26).

Distinctive from the Italian vessels, the Ottoman vessels bear a thick white slip on the interior, which sometimes is also applied to the upper exterior. Various colors or colored slips were poured on the slipped vessel while on the turning wheel (Kontogiannis 2015:172). The thick slip can easily be distinguished in the sections of the vessels and on their exterior. The colored slips had either a marbled appearance (Kontogiannis 2015: Figs. 3, 4) or a speckled one (Kontogiannis 2015: Fig. 7). Marbled ware was produced from the eighteenth to the late nineteenth century in various workshops in the Ottoman Empire, such as at Athens, Didymoteicho and Ganos (Kontogiannis 2015:172).

The basins from Yafo have a round body with a diameter of over 20 cm and a hooked ledge rim (Fig. 5:1–3, 10, 12); the bases are ring bases (Fig. 5:4, 6, 11). One plate has a

---

[2] For an overview on Italian Marmorizzata Ware, see Moore Valeri 2005.

[3] Three smoking pipe fragments, two of which were found with the marbled wares, are the only other finds dated to the seventeenth century.

[4] I wish to thank my colleagues Marcella Giorgio, Giuseppe Clemente, Van Verrocchio, Hugo Blake, Lucy Vallauri, Henri Amouric for looking at the sherds at the Faenza Pottery and Communities Conference in April 2015, confirming that it is not Italian Marmorizzata Ware. Nikos Liaros and Nikos Kontogiannis suggested that it is Ottoman marbled ware.

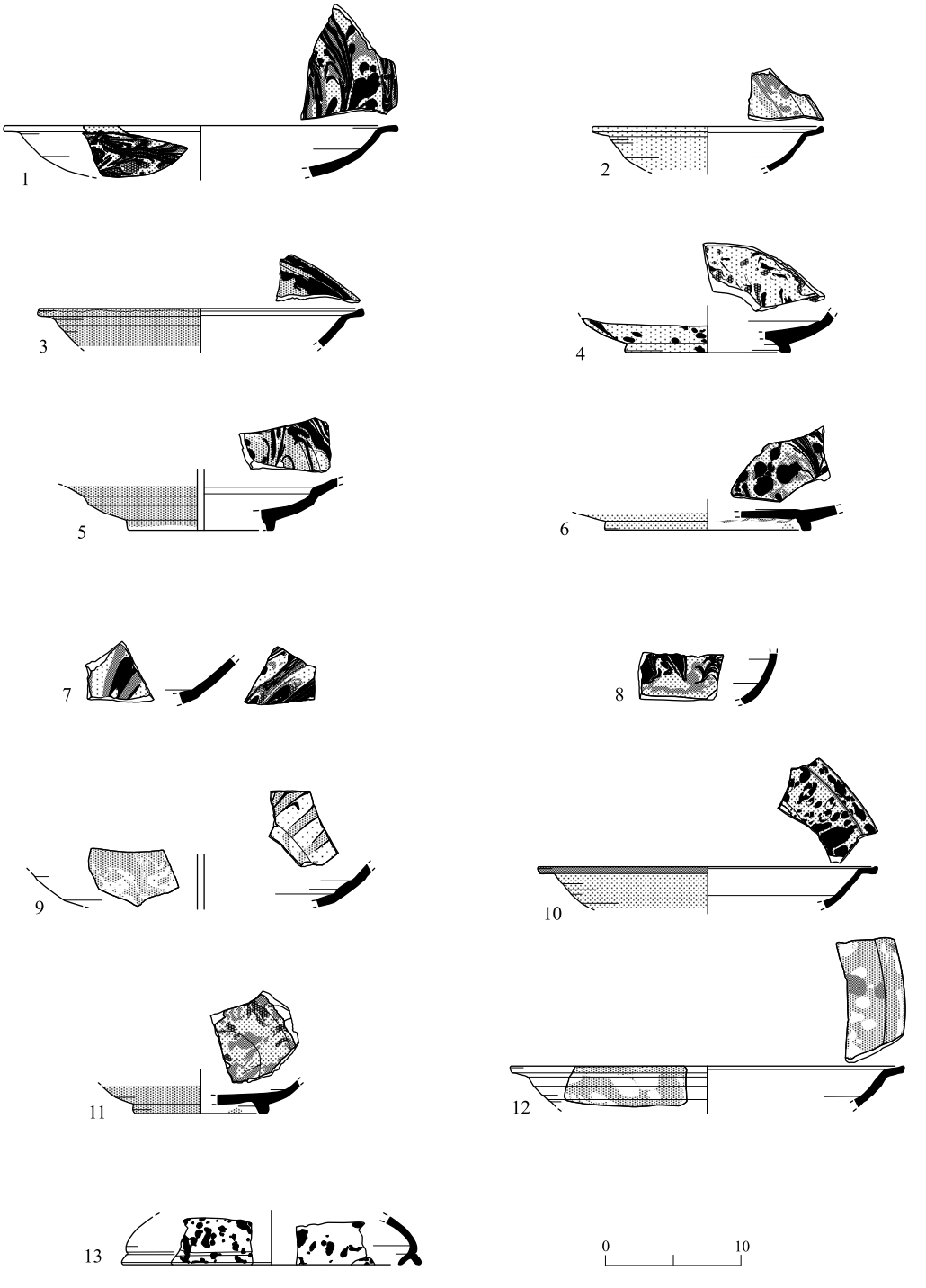

Fig. 5. Late Ottoman period ceramics: Marmorizzata and Maculata Wares.

◂ **Fig. 5**

No.	Vessel Type	Locus	Basket	Dimension (cm)[i]	Ware and Surface Color
1	Basin (J-MARM-BAS-1A)	197	1079/1	Diam. 20 Rim 5%	Very pale brown ware (10YR 8/3); white slip; mottled green, yellow and brown; colorless glaze
2	Basin (J-MARM- BAS-1B)	131	1021/5	Diam. 22 Rim <5%	Red ware (2.5YR 5/6) with few small round white inclusions; white slip; green and brown; yellow transparent glaze; ext. yellow transparent glaze over white slip
3	Basin (J-MARM- BAS-1B)	131	1021/2	Diam. 24 Rim 8 %	Light brown ware (7.5YR 6/4) with few small round white inclusions; white slip; green and brown paint; yellow transparent glaze; ext. yellow transparent glaze over white slip
4	Basin with ring base (J-MARM- BAS-2C)	110	1009/3	n/a	Reddish yellow ware (5YR 6/6) with few small round white and black inclusions; white slip; brown, yellow and green; colorless glaze
5	Plate (J-MARM-PL-2C)	135	1024/2	n/a	Very pale brown ware (10YR 8/4) with few small round white inclusions; brown slip; yellow and green; colorless glaze; ext. colorless glaze over brown slip
6	Basin with ring base (J-MARM- BAS-2C)	154	1052/2	n/a	Reddish yellow ware (5YR 6/6) with few small round angular inclusions; white slip; green, yellow and brown paint; colorless glaze
7	Basin (J-MARM- BAS-1D)	151	1048	n/a	Reddish yellow ware (5YR 7/6) with few small round white inclusions; yellow slip; brown and manganese; colorless glaze
8	Basin (J-MARM- BAS-1D)	136	1025/3	n/a	Pink ware (7.5YR 8/4) with few small round black inclusions; white slip; green and brown; colorless glaze
9	Basin (J-MARM- BAS-2D)	135	1024/1	n/a	Pink ware (7.5YR 7/4) with few small angular white inclusions; white slip; brown, yellow and green; colorless glaze
10	Basin (J-MAC-BAS-1B)	131	1021/10	Diam. 26 Rim 8%	Pale yellow ware (2.5Y 7/3) with few small angular black inclusions; white slip; dark olive green splashes; greenish-yellow transparent glaze; ext. white slip under greenish-yellow transparent glaze
11	Basin with ring base (J-MAC-BAS-1C)	131	1021/8	n/a	Reddish yellow ware (5YR 7/6) with very few small round black inclusions; white slip; brown and green paint; yellow transparent glaze; ext. white slip under yellow transparent glaze
12	Basin (J-MAC-BAS-2A)	156	1056/1	Diam. 24 Rim 10%	Brownish yellow ware (10YR 6/6) with few small round white inclusions; white slip; green and yellow paint splashes on brown; colorless glaze
13	Lid (J-MAC-LID-1)	136	1025/2	Diam. 20 Rim 10%	Very pale brown ware (10YR 7/4) with small angular white inclusions; white slip; brown paint splashes; colorless glaze.

[i] n/a = not available.

carinated body and a ring base (Fig. 5:5). The repertoire of shapes is rather restricted, and it seems that mainly plates and basins were imported. The colored slips had a marbled (Fig. 5:1–9) or speckled (Fig. 5:10–13) appearance.

J-MAC-LID-1 (Fig. 5:13).— Fragmentary lid with forked rim and decorated on both sides with brown splashes on white slip under a colorless glaze. Lidded bowls have been discussed by Liaros (2018: Pl. I:6a–6f), who suggested that they were made in Didymoteicho based on the ware and technical and decorative features (Liaros 2012:204), although no petrography was done on the vessels.

Albisola Brown-Glazed Bowls (Fig. 6:1, 2)

These earthenware bowls are made of well-fired fine red ware and are glazed with a coffee-brown lead glaze. They are decorated with black painted strokes and wavy lines, which are positioned randomly on the vessel (François 2008:97). Various names (*céramiques à tâches noires, fayance brune or terres de gene*) were given to these bowls in the literature (François 2008:97). They were produced in pottery workshops in Albisola, a city not far from Genoa in the Italian region of Liguria. During the eighteenth century, this pottery was common in Italy, and widely exported throughout the western Mediterranean (Blake 1981:116). A shipwreck, identified near Marseille in 1991, was excavated, and its cargo contained Albisola plates of different sizes and cooking bowls (*terrines*) with lids (Capelli et al. 2012: Fig. 2); the petrographic analysis confirming that they were produced in Liguria (Capelli et al. 2012:14). These vessels do not seem to be very common in the eastern Mediterranean; few examples were found in Beirut and Damascus (François 2008:98), and a plate fragment with a ledge rim was reported at ʻAkko (Edelstein and Avissar 1997: Fig. 1:11). Several fragments have been identified in Yafo.[5] These vessels are dated to the end of the eighteenth and nineteenth centuries.

J-ALB-BL (Fig. 6:1).— Flat base of bowl. The interior is glazed with a coffee-brown glaze and decorated with wavy lines.

J-ALB-BL-1 (Fig. 6:2).— Fragment of bowl with rolled rim. The interior and upper exterior of the bowl are glazed with coffee-brown glaze. Although no black lines or strokes are preserved, the ware and glaze identify this fragment as belonging to the group of Albisola wares.

[5] In the IAA excavations on Ha-Ẓorfim Street, directed by Y. Arbel (Vincenz, forthcoming [b]: Fig. 9).

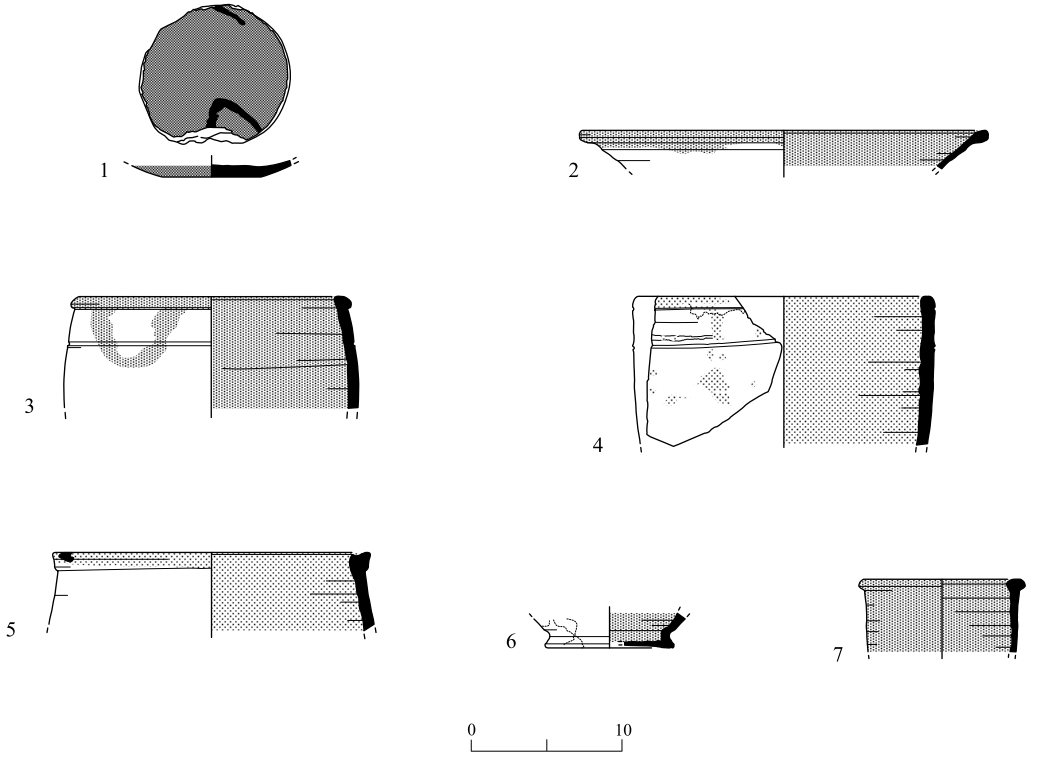

Fig. 6. Late Ottoman period ceramics: Albisola bowls and glazed cooking vessels.

No.	Vessel Type	Locus	Basket	Dimensions (cm)[i]	Description
1	Bowl (J-ALB-BL)	778	7187	n/a	Red ware (10R 5/8) with few small white inclusions; coffee-brown slip and transparent glaze; black lines
2	Bowl (J-ALB-BL-1)	957	8443	Diam. 28 Rim 6%	Red ware (10R 5/8) with few small white inclusions; coffee-brown slip and transparent glaze
3	Cooking pot (J-VAL-CP-4)	874	80171/3	Diam. 18 Rim 13%	Light red ware (2.5YR 7/6) with many small white and black inclusions; bright brown slip under transparent glaze
4	Cooking pot (J-VAL-CP-4)	103	1003/2	Diam. 18 Rim: 8%	Pink ware (7.5YR 7/4) with many small angular white and black and pottery inclusions; bright yellowish-brown glaze under transparent glaze
5	Cooking pot (J-GL-CP2)	763	7164/22	Diam. 22 Rim 13%	Pink ware (2.5YR 8/3) with small pottery inclusions; yellow glaze with small brown spots
6	Cooking pot or jug base (J-GL-CP?)	881	80226/6	n/a	Pink ware (7.5YR 7/4) with many small angular white and black and pottery inclusions; bright yellowish-brown glaze
7	Cooking pot/ jug	131	1021/1	Diam. 8 Rim 12%	Pale yellow ware (2.5Y 8/2) with few small angular black inclusions; yellow glaze speckled green

[i] n/a = not available.

Vallauris Glazed Cooking Pot (Fig. 6:3, 4)

Some glazed cooking pots were imported from southern France during the nineteenth century, mainly from Vallauris. The entire region of Provence down to the Ligurian coast was dotted with pottery workshops of all sizes. Different types of cooking pots were produced, of which the most typical was the deep cooking pot with straight walls and a round rim. Wide band handles with deep thumb impressions were attached to the vessel, the largest vessels having four handles (Petrucci 1999:17). The vessels, dating to the end of the nineteenth and beginning of the twentieth centuries, were mostly slipped on the interior and rim with a dark red or bright brown slip, and glazed with a transparent lead glaze (Petrucci 1999:19). Many fragments of cooking pots, probably produced in Vallauris, were identified in the Qishle excavations (Vincenz 2021b: Fig. 8.2E).[6]

J-VAL-CP-4 (Fig. 6:3, 4).— Two large cooking-pot fragments. The first (Fig. 6:3) has a simple rounded rim forming an external roll; its interior was slipped bright brown and then covered with a transparent lead glaze which let the slip shine through. The second (Fig. 6:4) has a simple round rim, a bright yellowish brown slip and a transparent lead glaze. The fragments were identified as belonging to *marmites hautes* with a high body and wide handles with a thumb impression on top. The cooking pots correspond to Vallauris No. 12, with a capacity of five liters (see Petrucci 1999:17). They date to the end of the nineteenth and the beginning of the twentieth centuries.

Glazed Cooking Vessels (Fig. 6:5–7)

These slipped and glazed fragments have been grouped together, since it was assumed that they were cooking vessels. No satisfactory parallels were found; they can only tentatively be dated to the nineteenth century.

J-GL-CP-2 (Fig. 6:5).— Large pot with beveled pinched rim with groove. The interior and rim are glazed yellow with small brown spots.

J-GL-CP? (Fig. 6:6).— Almost flat base of pot or jug, glazed internally in bright yellowish-brown.

Cooking Pot/Jug? (Fig. 6:7).— Jug or cooking pot with a round mushroom rim, glazed on the exterior and the upper interior in yellow, speckled with green.

---

[6] No petrographic analysis was carried out on the vessels and no stamps were found on any of the fragments. An indication of the provenance was given by François Carrazé, who looked at photographs and drawings of the vessels. Moreover, a shipwreck found in the Dor Lagoon carried a cargo containing stamped cooking pots from Vallauris (Kahanov, Cvikel and Wielinski 2012).

Monochrome Glazed Bowls (Fig. 7)

Monochrome glazed bowls form a large group among the glazed bowls. Most of them are glazed green over a thick white slip, but some bowls were yellow glazed. The shapes of the bowls vary, ledge rim bowls being very common. Other bowls have a simple round rim, which can be everted or inverted. Not much can be said about their production centers, as again, only petrographic analysis can answer this question. It can be assumed that they were produced in one of the many pottery workshops of the Ottoman Empire. The common ledge rim bowls were defined by Hayes as 'Turkish type' (Hayes 1992: Figs. 107, 108); they were also found in the Drip-Painted and Çanakkale Wares (see above). A dating in the eighteenth and nineteenth centuries is suggested.

J-MONO-BL-1A (Fig. 7:1).— Bowl with a long ledge rim glazed with dark green glaze over a white slip.

J-MONO-BL-1B (Fig. 7:2, 3).— Bowls with a long, hooked ledge rim glazed with different shades of green glaze on the interior, dripping on the exterior. The slip is either white (Fig. 7:2) or gray (Fig. 7:3).

J-MONO-BL-1C (Fig. 7:4).— Bowl with a ledge rim with incised nicks. The interior is glazed with a dark green glaze over a white slip, dripping on the exterior. Liaros published bowls with nicks on the rim, assigning them to workshops in Didymoteicho (Liaros 2018: Pl. II:10a, 11a, 11b).

J-MONO-BL-1D (Fig. 7:5).— Bowl with a piecrust decorated ledge rim, with a dark green lustrous glaze over white slip, dripping on the exterior. Bowls with a piecrust decoration on the rim have been published by Liaros (2018: Pl. II: 10b, 10c).

J-MONO-BL-1E (Fig. 7:6–9).— Bowls with a simple round rim, either deep (Fig. 7:6), or shallow with a ring base (Fig. 7:7). The deep bowl (Fig. 7:6) is glazed on the interior and the upper exterior over a white slip. The second example (Fig. 7:7) is glazed on both sides with a dark green glaze over a white slip, only the base remains unglazed (for bowls with simple rims, see Liaros 2018: Pl. II:14, 18). Two examples with a simple round rim are larger in size (Fig. 7:8, 9).

J-MONO-BL-1F (Fig. 7:10).— A single bowl with yellow glaze has a sharply inverted pinched rim.

J-MONO-BL-1G (Fig. 7:11).— A shallow bowl fragment with a flanged rim with incised nicks, glazed on the interior and the upper exterior with a dark green glaze.

Fig. 7 ▸

No.	Vessel Type	Locus	Basket	Dimensions (cm)	Description
1	Bowl (J-MONO-BL-1A)	763	7164/8	Diam. 22 Rim 10%	Reddish yellow ware (5YR 6/6) with few small white inclusions; dark green glaze on int. and ext. over white slip
2	Bowl (J-MONO-BL-1B)	874	80222/1	Diam. 24 Rim 12%	Yellowish red ware (5YR 5/8) with few small white inclusions; light green glaze on int. over white slip; slip dripping on ext.
3	Bowl (J-MONO-BL-1B)	763	7164/11	Diam. 24 Rim 10%	Light red ware (2.5YR 6/6) with many small white inclusions; greenish-yellow glaze over gray slip; green band on rim forming glaze bubbles during firing
4	Bowl (J-MONO-BL-1C)	881	80228/1	Diam. 18 Rim 20%	Reddish yellow ware (5YR 6/6) with few small white inclusions; dark green glaze on int. over white slip dripping on ext.; incised nicks on ext. rim
5	Bowl (J-MONO-BL-1D)	120	1063	Diam. 24 Rim 10%	Light red ware (2.5YR 6/6) with few small white and micaceous inclusions; dark green lustrous glaze on int. over white slip, dripping on ext.
6	Bowl (J-MONO-BL-1E)	763	7164	Diam. 20 Rim 12%	Reddish yellow ware (5YR 7/6) with few small white inclusions; dark green glaze on int. and upper ext. over white slip
7	Bowl (J-MONO-BL-1E)	763	7215/25	Diam. 14 Rim 13%	Light red ware (2.5YR 6/6) with few small white inclusions; dark green glaze on int. and ext. over white slip; base unglazed
8	Bowl (J-MONO-BL-1E)	156	1056/2	Diam. 24 Rim 9%	Pink ware (7.5YR 7/4) with few small round black inclusions; greenish-yellow glaze
9	Bowl (J-MONO-BL-1E)	136	1025/6	Diam. 22 Rim 5%	Pink ware (5YR 7/4) with few small angular white inclusions; int. and upper ext. glazed green
10	Bowl (J-MONO-BL-1F)	897	80257/1	Diam. 32 Rim 5%	Light red ware (2.5YR 6/6) with few small white inclusions; pale yellow glaze over white slip; slip covers entire bowl
11	Bowl (J-MONO-BL-1G)	186	1073/2	Diam. 24 Rim 6%	Red ware (2.5YR 5/6) with few small round and angular white inclusions; int. and upper ext. glazed dark green

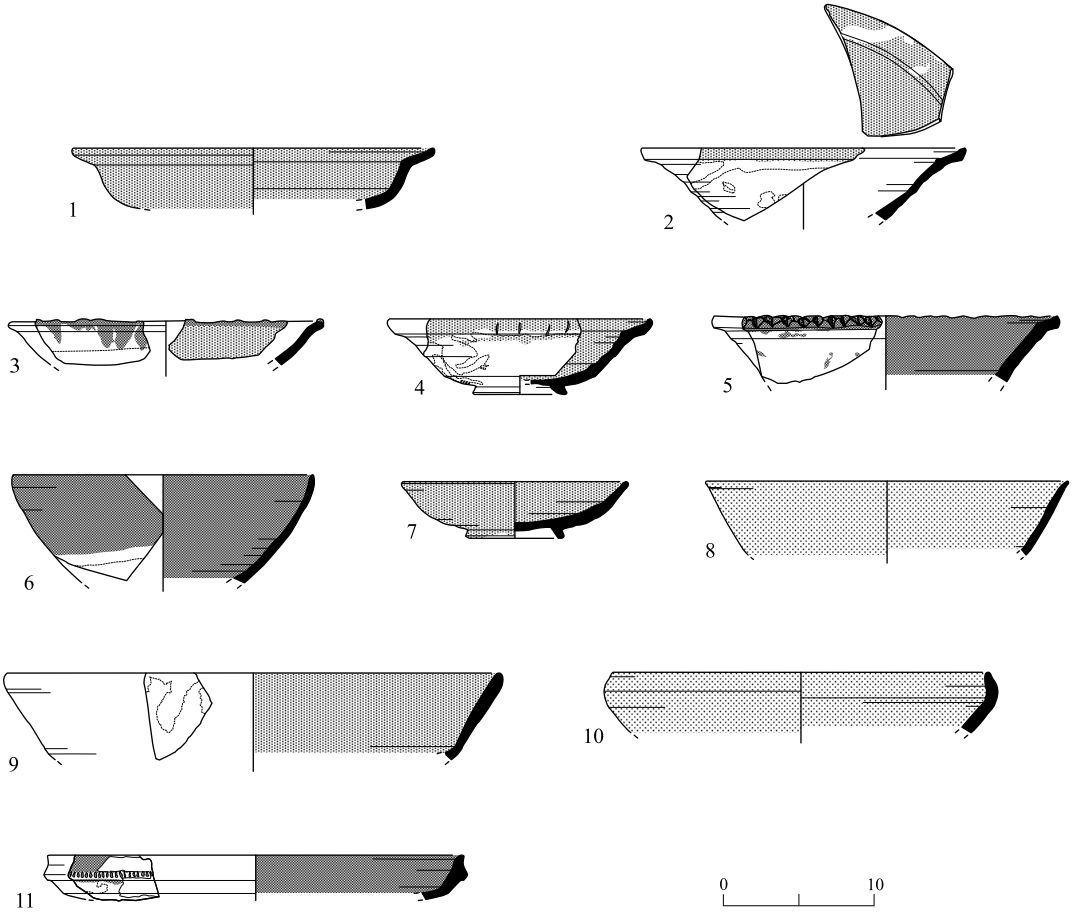

Fig. 7. Late Ottoman period ceramics: Monochrome glazed wares.

Miscellaneous Glazed Vessels (Fig. 8)

Wall or Floor Tiles

Glazed wall and floor tiles are well-known and extensively used during the Ottoman period, not only in palatial but also in domestic architecture (for a history of tiles, see Pasinli and Balaman 1991). Decorated floor tiles continued to be used well into the nineteenth and twentieth centuries (Vincenz 2020b:340–342). A colored earthenware floor tile was published from the Jerusalem Boulevard in Yafo (Vincenz 2017: Fig. 5:8).

J-GL-TILE (Fig. 8:1, 2).— Two tile fragments made of rather hard pink terracotta are covered with white glaze and painted blue rosettes. They should probably be dated to the nineteenth century.

Wasters (Fig. 8:3)

Three pieces of a closed vessel made of soft-paste and glazed green on both sides stuck together in the kiln during firing. This is evidence for the local production of soft-paste vessels.

Sewage or Water Pipes (Fig. 8:4, 5)

Two fragments of large, glazed pipes probably belonged to sewage installations. They are made of coarse earthenware and glazed on both sides with thick brown glaze. Sewage and water drainpipes of the early modern period have not yet entered the archaeological record in Israel. They are, however, documented in historical excavations in the USA, New Zealand and Australia. For example, during a salvage excavation at Mudgee Town Hall, Australia, a cesspit, dated to the late nineteenth century, was excavated, with terracotta pipes dated to the 1930s (Christison 2014: Pl. 4.19). They seem to be similar in shape to Fig. 8:4. A dating to the beginning of the twentieth century is thus suggested.

Stoneware Bottles (Fig. 8:6–9)

Stoneware is obtained by firing a mixture of clay and silica at c. 1200ºC until it partially vitrifies and becomes impervious to liquids. Unlike porcelain, it is usually opaque and does not require a glaze (Savage and Newman 2000:275–276). Stoneware was used for the production of bottles containing whiskey, mineral water and soda, but also for jars and other containers. Some of them have stamps, which mention the producer of the bottle and sometimes also the contents. Stoneware bottles were also used to store other liquids, such as seltzer, vinegar and even ink! Fragments of stoneware bottles have been found in Yafo, for example, at the Qishle (Vincenz 2021b: Fig. 8.4), or in Or Yehuda (Vincenz 2019b: Fig. 3:2).

J-STONE-BTL-1 (Fig. 8:6).— The fragmentary bottle has a flat base and a narrow neck. It is made of gray stoneware and glazed with a light brown lead glaze.

J-STONE-BTL-2 (Fig. 8:7–9).— The three fragmentary bottles with a flat base and a narrow neck are decorated with different shades of brown lead glaze.

These bottles possibly contained beer (*Society for Historical Archaeology: Beer & Ale Bottles*), or some other alcoholic drink, such as whiskey, consumed in Palestine by British soldiers at the end of the nineteenth century. Similar bottles were produced by E.P. Shaw & Co. Ltd. of Yorkshire. In 1901, they produced ginger beer, bottled mineral waters and sodas of all flavors (*Antique Bottles: Shaw*). They can be dated to the end of the nineteenth century.

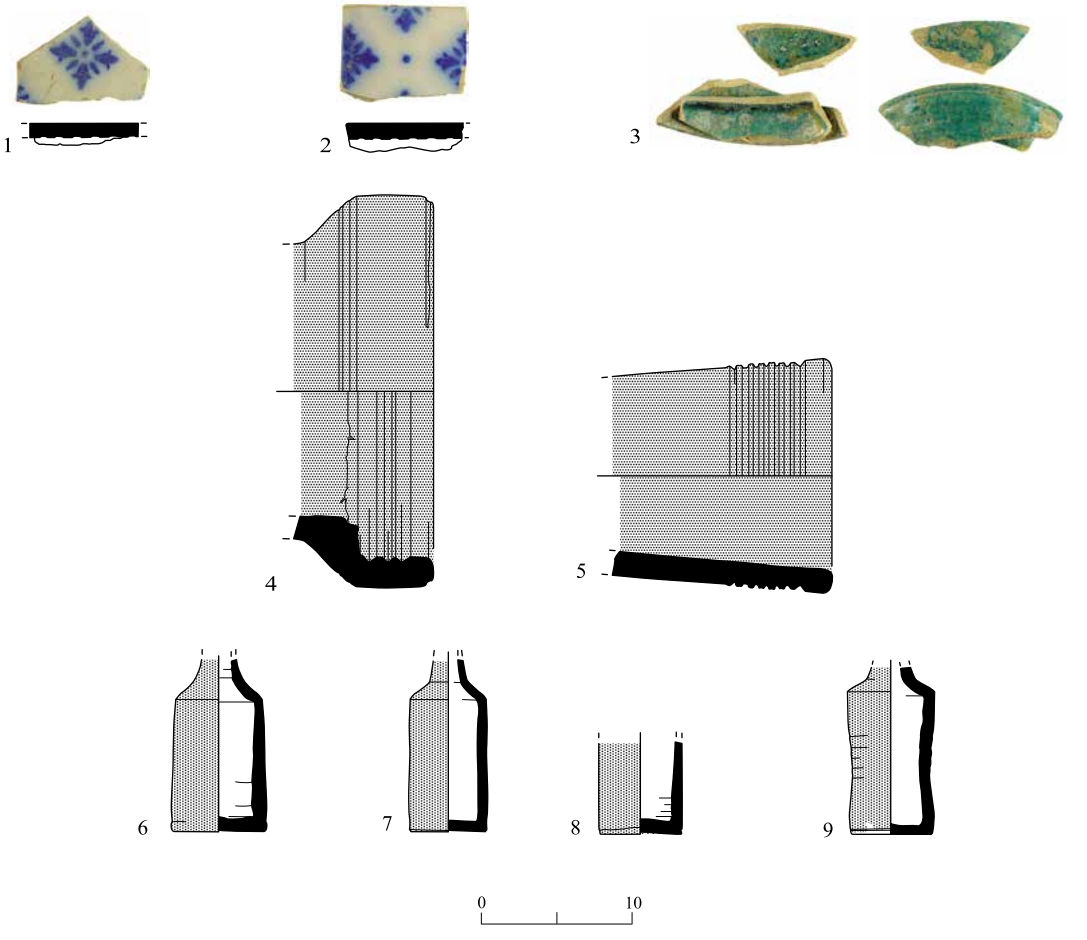

Fig. 8. Late Ottoman period ceramics: glazed tiles, pipes and bottles.

No.	Vessel Type	Locus	Basket	Dimensions (cm)[i]	Description
1	Floor tile (J-GL-TILE)	840	8040/3	7 x 4.5	Pink ware (5YR 8/4); glazed white with blue rosette pattern
2	Floor tile (J-GL-TILE)	707	7007	7.5 x 5.5	Pink ware (5YR 8/4); glazed white with blue rosette pattern
3	Kiln Waster	890	80240	n/a	Yellowish soft paste vessels with bright turquoise glaze, stuck together in kiln
4	Sewage Pipe	743	7108	Diam. 26 Rim 22%	Stoneware; thick dark brown glaze on int. and ext.
5	Sewage Pipe	743	7109	Diam. 18 Rim 7%	Stoneware; glazed red-brown
6	Bottle (J-STONE-BTL-1)	869	80134	Base diam. 5.3	Beige stoneware; light brown lead glaze
7	Bottle (J-STONE-BTL-2)	900	80259/1	Base diam. 4.9	Brown stoneware; brown lead glaze
8	Bottle (J-STONE-BTL-2)	957	8443	Base diam. 5	Gray stoneware; brown lead glaze
9	Bottle (J-STONE-BTL-2)	137	1026/1	Base diam. 5.3	Light gray stoneware; brownish-green lead glaze

[i] n/a = not available.

BLACK GAZA WARE VESSELS (Figs. 9, 10)

A group of vessels associated with Ottoman sites is the Black Gaza Ware. Its origin and first appearance are still disputed. Gibson ascribed the Gaza Ware from Saṭaf to the seventeenth century (Gibson, Ibbs and Kloner 1991:44–47), but other scholars, such as Rosen and Goodfriend (1993) date its appearance back to the sixteenth century. Israel (2006) dated it between the seventeenth to the twentieth century.

All household vessels were manufactured in Gaza Ware, but without doubt, the best-known vessel is the water jar with a long spout. These vessels are found in Yafo, e.g., at the Qishle (Vincenz 2021b:168–172) and on Jerusalem Boulevard (Vincenz 2017: Figs. 2:7, 8; 3:2–4; 4:5). They were also found at Kefar Gabirol (Vincenz, 2019a: Figs. 7–9) and Or Yehuda (Vincenz 2019b: Figs. 1; 2:6, 7).

During the research on the ceramics from the Qishle, a typology of Gaza Ware and other coarse wares was created. These type designations are used here, and parallels from Israel's (2006) corpus are added, as well as parallels from other sites.

Serving Bowl (Zebdiye)
J-GAZA-BL-1C (Fig. 9:1).— Bowl with deep body and folded rim (Israel 2006:210, Fig. 212, *zebdiye* Subtype 8; Vincenz 2019b: Fig. 1:1).

Basins for Food Preparation (Leken)
J-GAZA-BAS-1C (Fig. 9:2).— Basin with flaring body and horizontal ledge rim.

J-GAZA-BAS-1B (Fig. 9:3).— Basin with round body and short round ledge rim (Israel 2006: Fig. 190, *leken* Subtype 3).

J-GAZA-BAS-1 (Fig. 9:4, 5).— Basin with grooved ledge rim and round body (Israel 2006: Fig. 184, *leken* Subtype 1A). This type of vessel has also been found at Yafo on Ha-Ẓorfim Street (Vincenz, forthcoming: Fig. 17:3, 5).

J-GAZA-BAS-4A (Fig. 9:6).— Basin with round body and short grooved rim (Israel 2006: Fig. 179, *leken* Subtype 1A).

Jars for Carrying Water (Jarra)
J-GAZA-JR-5A (Fig. 10:1).— Jar with bulging neck and rounded rim and handles attached at the base of neck (Israel 2006: Fig. 54, *jarra* Subtype 3).

J-GAZA-JR-4A (Fig. 10:2).— Jar with bulging neck and triangular rim, and a prominent edge thumb impressed at intervals in the middle of the neck. This jar usually has two handles drawn from the base of the neck (Israel 2006: Fig. 63, *jarra* Subtype 11).

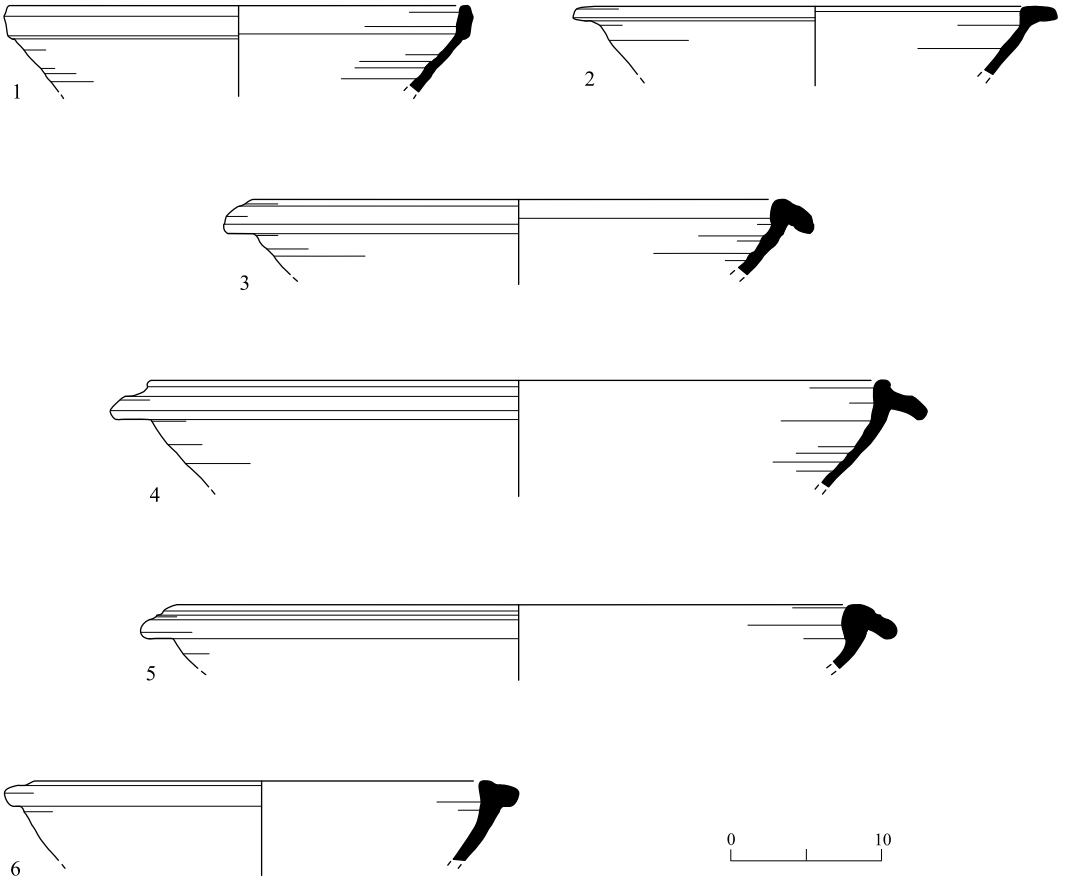

Fig. 9. Late Ottoman period ceramics: Gaza Ware bowl and basins.

No.	Vessel Type	Locus	Basket	Dimensions (cm)	Description
1	Bowl (J-GAZA-BL-1C)	763	7164/3	Diam. 22 Rim 10%	Dark gray ware (10YR 4/1) with few medium sized round white inclusions; dark gray surface (10YR 4/1)
2	Basin (J-GAZA-BAS-1C)	891	80233/3	Diam. 24 Rim 15%	Gray ware (7.5YR 5/1) with few small round white inclusions; dark gray surface (10YR 4/1)
3	Basin (J-GAZA-BAS-1B)	937	8437	Diam. 36 Rim 11%	Gray ware (7.5YR 5/1) with few small round white inclusions; dark gray surface (10YR 4/1)
4	Basin (J-GAZA-BAS-1)	874	80171/2	Diam. 38 Rim 7.5%	Gray ware (7.5YR 5/1) with few small round white inclusions; dark gray surface (10YR 4/1)
5	Basin (J-GAZA-BAS-1)	891	80233/6	Diam. 40 Rim 7%	Gray ware (7.5YR 5/1) with few small round white inclusions; dark gray surface (10YR 4/1)
6	Basin (J-GAZA-BAS-4A)	818	8038/7	Diam. 34 Rim <5%	Gray ware (7.5YR 5/1) with few small round white inclusions; dark gray surface (10YR 4/1)

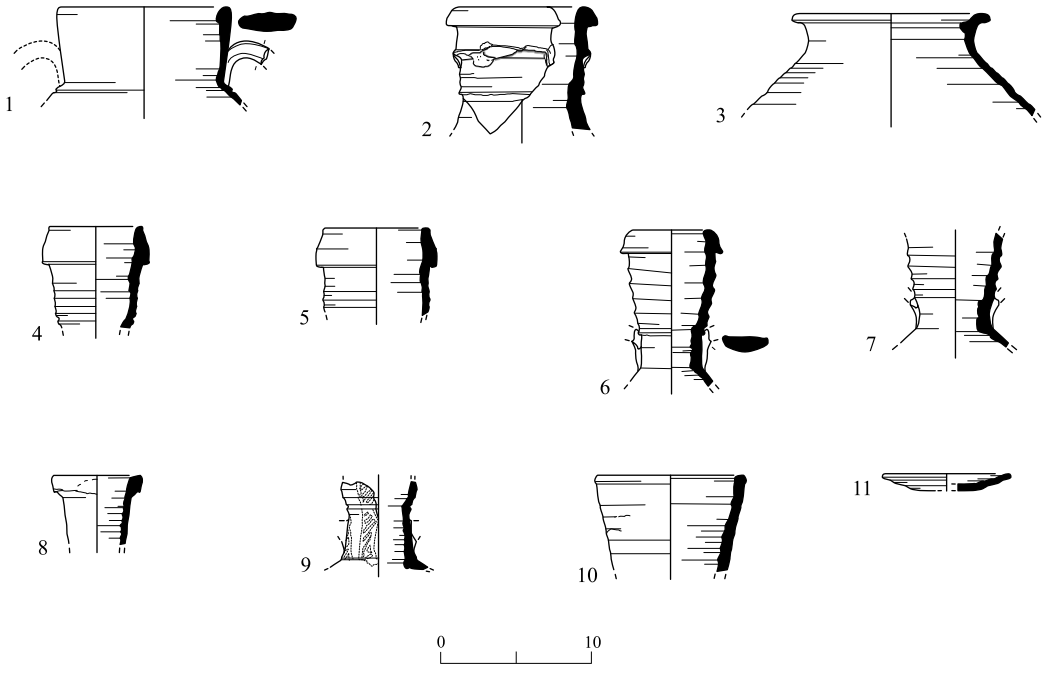

Fig. 10. Late Ottoman period ceramics: Gaza Ware jars, jugs and lid.

No.	Vessel Type	Locus	Basket	Dimensions (cm)[i]	Description
1	Jar, *jarra* (J-GAZA-JR-5A)	778	7187/1	Diam. 10 Rim 17%	Gray ware (7.5YR 5/1) with few small angular white inclusions; gray surface (2.5Y 5/1)
2	Jar, *jarra* (J-GAZA-JR-4A)	891	80133/14	Diam. 9 Rim 10%	Gray ware (7.5YR 5/1) with few small round white inclusions; dark gray surface (2.5Y 4/1)
3	Jar, *burniye* (J-GAZA-JR-1A)	764	7196/2	Diam. 12 Rim 34%	Gray ware (7.5YR 5/1) with few small round white inclusions; dark gray surface (2.5Y 4/1)
4	Jug, *brik* (J-GAZA-JUG-7B)	918	80335/6	Diam. 6 Rim 35%	Gray ware (7.5YR 5/1) with few small round white inclusions; dark gray surface (2.5Y 4/1)
5	Jug, *brik* (J-GAZA-JUG-7B)	918	80320/6	Diam. 6 Rim 25%	Gray ware (7.5YR 5/1) with few small round white inclusions; dark gray surface (2.5Y 4/1)
6	Jug, *brik* (J-GAZA-JUG-5A)	891	80233/15	Diam. 5,5 Rim 100%	Gray ware (7.5YR 5/1) with few small round white inclusions; dark gray surface (2.5Y 4/1)
7	Jug, *brik* (J-GAZA-JUG-5A)	879	80173/1	n/a	Gray ware (7.5YR 5/1) with few small round white inclusions; dark gray surface (2.5Y 4/1); neck filled with plaster
8	Jug, *brik* (J-GAZA-JUG-2B)	892	80260/6	Diam. 6 Rim 25%	Gray ware (7.5YR 5/1) with few small round white inclusions; dark gray surface (2.5Y 4/1)
9	Jug, *brik* (J-GAZA-JUG-7D)	136	1025/7	n/a	Gray ware (7.5YR 5/1) with few small round white inclusions; dark gray surface (2.5Y 4/1); white-painted decoration
10	Jug, *kuz* (J-GAZA-JUG-8C)	937	8437	Diam. 9 Rim 22%	Gray ware (7.5YR 5/1) with few small round white inclusions; dark gray surface (2.5Y 4/1)
11	Flat circular lid (J-GAZA-LID-3)	893	80249/3	Diam. 7.5 50%	Gray ware (7.5YR 5/1) with few small round white inclusions; dark gray surface (2.5Y 4/1)

[i] n/a = not available.

Jar for Storing Labane Cheese (Burniyie)
J-GAZA-JR-1A (Fig. 10:3).— This vessel is shaped like a cooking pot with a grooved ledge rim and an ovoid body (Israel 2006: Fig. 247, *burniyie* Subtype 1; Vincenz 2019a: Fig. 9:1).

Spouted Drinking Jugs (Ibrik)
J-GAZA-JUG-7B (Fig. 10:4, 5).— Jugs with tall, slightly ribbed neck and folded rim (Israel 2006: Fig. 132, *brik* Subtype 2; Boas 2000: Pl. I:14).

J-GAZA-JUG-5A (Fig. 10:6, 7).— Jugs with tall, ribbed neck and inverted folded rim. Two handles are positioned at the base of the neck and there is a spout on the side (Israel 2006:153, Fig. 133, *brik* Subtype 3). Figure 10:7 has the neck filled with plaster, probably used to seal the jug.

J-GAZA-JUG-2B (Fig. 10:8).— Jug with tall plain neck ending in triangular rim. These jugs usually have one handle, which is positioned at the base of the neck and the spout is opposite the handle (Israel 2006: Fig. 135, *brik* Subtype 5).

J-GAZA-JUG-7D (Fig. 10:9).— The jug neck of a *brik* with a white-painted decoration. *Ibrik* with painted decorations are quite common, either in white, pink or orange (Israel 2006:152, Fig. 132; Boas 2000: Fig. 12).

One-Handled Jug (Kuz)
J-GAZA-JUG-8C (Fig. 10:10).— The rim and rather high and wide neck probably belonged to a *kuz*, a one-handled jug. The handle would have been drawn from the base of the neck to the body (Israel 2006: Fig. 106b, *kuz* Type 1).

Gaza Ware Lid
J-GAZA-LID-3 (Fig. 10:11).— A flat, circular lid with an incised line around the rim (Israel 2006: Fig. 265, lid Subtype 3).

Coarse Ware (Figs. 11, 12)

Coarse wares of the Ottoman period rarely appear in publications and have only recently found their way into scholarly interest. Apart from the characteristic Gaza Ware, there is a repertoire of coarse wares made of different colored clays, such as red, pink and brown. The shape repertoire, comprising bowls, basins, jugs and jars is similar to that of Gaza Ware. Coarse ware vessels have been published from excavations at the Qishle (Vincenz 2021b: 173–174) and other sites in Yafo (Vincenz 2020a: Fig. 4; 2020b: Fig. 15:2, 8, 10, 11; 2020c: Figs. 15, 16).

Small to Medium-Sized Serving Bowls
Type J-BL-1 (Fig. 11:1–4).— Four bowls with sharply inverted rims made of gray or pink ware, undecorated and rather coarse in appearance. They are identical to Gaza Ware bowls Type J-GAZA-BL-1A. Bowls of this type found on Ha-Ẓorfim Street in Yafo (Vincenz, forthcoming [b]: Fig. 16:1, 2) and in Kefar Gabirol (Vincenz 2019a: Fig. 4:1, 2).

Type J-BL-2 (Fig. 11:5).— A bowl with a slight carination on upper body and a round rim is made of brown ware. This bowl type originates in the Mamluk period, and it continues to be produced in the Ottoman period (for a discussion, see Stern, Toueg and Shapiro 2019:137–139, with additional parallels therein).

Type J-BL-11 (Fig. 11:6).— A bowl made of yellowish red ware, with an everted ledge rim. Bowls with ledge rims are quite common with monochrome green glaze (see Fig. 7:1–5).

Small Bowl used as Lamp
Type J-BL-10A (Fig. 11:7).— A small, coarsely made bowl of rather thick grayish brown ware with flat base and incurved rim. The soot remains on the rim and inside of the bowl attest that it was used as a lamp.

Basin for Food Preparation
Type J-BAS-1 (Fig. 11:8).— This large basin with a flanged rim is made of yellowish red ware. It has a parallel in the Gaza ware basins (Israel 2006: Fig. 181). It was probably used as a kneading and mixing bowl.

Large Storage Vessel (*Zir*)
Type J-ZIR (Fig. 11:9).— A very large, wheel-made storage vessel is made of coarse, very gritty ware with many organic inclusions. The vessel's surface was covered with a thick slip to isolate it. Israel published many such large storage vessels of various shapes (Israel 2006:118–125).

Jar for Storing Labane Cheese (Burniye)
J-JR-2A (Fig. 11:10).— This neck-less jar with an everted round rim, made of gray ware with a pinkish to light brown surface, is similar to *burniye* jars made of Gaza Ware. A similar jar with a short neck was found at Kefar Gabirol (Vincenz 2019a: Fig. 5:1).

Jars for Carrying Water (Jarra and *Assliye)*
J-JR-7B (Fig. 11:11–13).— These jars, made of light red to reddish ware, have a bulging neck and a rounded rim, and two band handles attached at the base of neck. They are of the same form as Type J-GAZA-JR-5A (Israel 2006: Fig. 54, *jarra* Subtype 3).

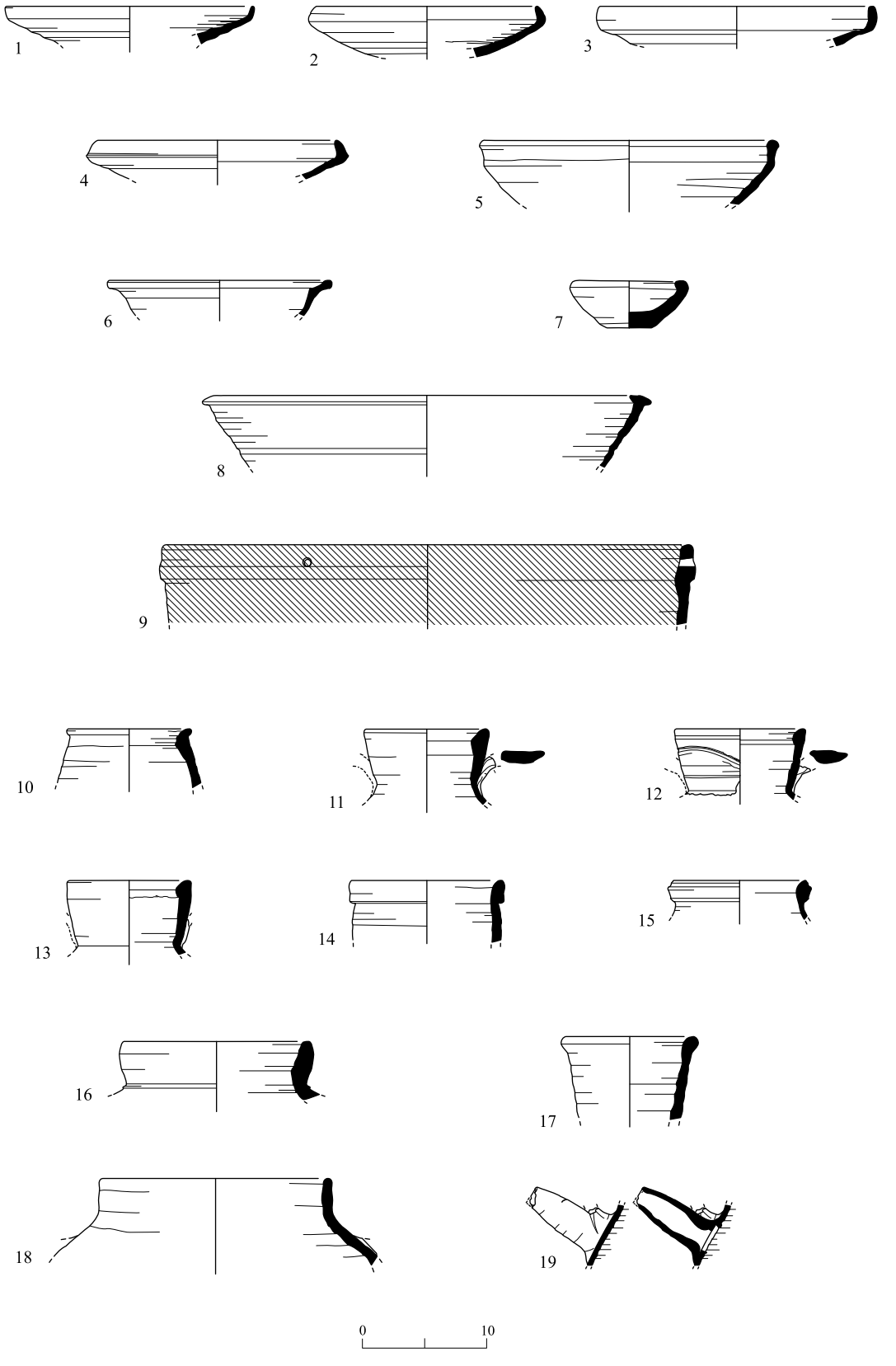

Fig. 11. Late Ottoman period ceramics: Coarse Ware bowls, jars, and jug.

◂ **Fig. 11**

No.	Vessel Type	Locus	Basket	Dimensions (cm)	Description
1	Bowl (J-BL-1)	763	7164-4	Diam. 10 Rim 12%	Gray ware with few medium sized white inclusions; light reddish brown surface (5YR 6/4)
2	Bowl (J-BL-1)	751	7138	Diam. 17 Rim 29%	Gray ware with large white inclusions and hollows left from burned-out organic inclusions; reddish yellow surface (5YR 6/6)
3	Bowl (J-BL-1)	897	80268/3	Diam. 18 Rim 10%	Gray ware with large white inclusions; pinkish gray surface (7.5YR 7/2)
4	Bowl (J-BL-1)	910	80309/3	Diam. 18 Rim 9%	Light red ware (2.5YR 6/8) with thick brown core and few small white inclusions; light reddish brown surface (2.5YR 6/4)
5	Bowl (J-BL-2)	891	80233//13	Diam. 18 Rim 7%	Brown ware (7.5YR 5/4) with many small white inclusions; reddish brown surface (5YR 5/4)
6	Bowl (J-BL-11)	109	1008/2	Diam. 16 Rim 13%	Yellowish red ware (5YR 5/6) with few small angular white inclusions; yellowish red surface (5YR 5/6)
7	Small bowl (J-BL-10A)	135	1025/2	Diam. 9 Rim 50%	Dark grayish brown (10YR 4/2) with many small round white and micaceous inclusions; dark grayish brown and burned surface (10YR 4/2)
8	Basin (J-BAS-1)	137	1026/3	Diam. 30 Rim 11%	Yellowish red ware (5YR 5/6) red with thick gray core and few small angular white inclusions; pink surface (7.5YR 7/3)
9	Large storage container (J-ZIR)	194	1077/1	Diam. 40 Rim 7%	Red ware (2.5YR 4/8) with few small round black inclusions; burnt out straw; reddish brown surface slip (2.5YR 5/4)
10	Jar, *burniye* (J-JR-2A)	957	8443	Diam. 8 Rim 22%	Gray ware with many small white and small carbonized organic inclusions; pinkish gray to light brown surface: (7.5YR 7/2-7.5YR 6/4)
11	Jar, *jarra* (J-JR-7B)	137	1026/2	Diam. 10 Rim 27%	Light red ware (2.5YR 7/6) with thick gray core and few small round white inclusions; pale yellow surface (2.5Y 8/2–7/3)
12	Jar, *jarra* (J-JR-7B)	186	1073/1	Diam. 8 Rim 25%	Reddish brown ware (5YR 5/4) with few small angular white inclusions; very pale brown surface (10YR 7/3)
13	Jar, *jarra* (J-JR-7B)	763	7164/21	Diam. 10 Rim 25%	Yellowish red ware (5YR 5/6) with few small white inclusions; light gray surface (10YR 7/2)
14	Jar, *jarra* (J-JR-6D)	751	7138	Diam. 10 Rim 10%	Yellowish red ware (5YR 5/6) with many small white inclusions; pink surface (5YR 7/5)
15	Jar, *jarra* (J-JR-6G)	906	80274/4	Diam. 10 Rim 18%	Pink ware (7.5YR 7/3) with many small white inclusions
16	Jar (J-JR-7E)	136	1025/4	Diam. 12 Rim:17%	Pink to reddish yellow ware (7.5YR 7/4–6/6) with few small round white inclusions; pink surface (7.5YR 8/3)
17	Jar, *assliye* (J-JR-14A)	910	80287/1	Diam. 10 Rim 20%	Red ware (2.5YR 5/6) with very few small white inclusions; light gray surface slip (10YR 7/2)

◂ **Fig. 11** (cont.)

No.	Vessel Type	Locus	Basket	Dimensions (cm)	Description
18	Large storage jar (J-HM-JR-1)	763	7164/2	Diam. 18 Rim 13%	Gray ware with many small white, black, shell and micaceous inclusions; pink self slip on surface (5YR 7/4)
19	Spout of *brik* (J-JUG-SPOUT)	108	1007/1	Length: 6.5	Reddish gray ware (10R 5/1) with few small round white inclusions; dark gray surface

J-JR-6D (Fig. 11:14).— Jar, made of yellowish red ware, with slightly bulging neck and folded rim. These jars first appear in the Mamluk period and continue into the Ottoman period (see Vincenz and Sion 2007: Fig. 11:25).

J-JR-6G (Fig. 11:15).— A jar, made of pink ware, with a bulging neck and profiled rim. This jar type was also found among Mamluk-period material (Vincenz and Sion 2007: Fig. 11:33).

J-JR-7E (Fig. 11:16).— A jar, made of pink to reddish yellow ware, with a rather short, everted neck and beveled rim. It first appeared in the Mamluk period, and continued in use in the Ottoman period (cf. Avissar and Stern 2005:102). During the Ottoman period, the rim is shorter and the body of the jar is squat. Similar jars were also produced in Gaza Ware (Israel 2006: Fig. 57).

J-JR-14A (Fig. 11:17).— A jar made of red ware with a flaring neck and everted round rim can probably be identified as an *assliye*, a jar with a long neck used for carrying water from the well (see Israel 2006:111–115).

Large Storage Jar (Zir)
J-HM-JR-1 (Fig. 11:18).— A handmade jar with a straight neck and round rim. Similar handmade storage containers can be seen on an old photograph (Israel 2006: Fig. 93).

Jug Spout
J-JUG-SPOUT (Fig. 11:19).— A spout made of reddish gray ware belongs to a *brik* jug similar to those made of Gaza Ware (see Fig. 10:4–9).

Decorated Jug Base
J-JUG-1B (Fig. 12:1).— Low ring-base of jug decorated with crisscross pattern and reworked to be used as a lid (cut-off and smoothed edges). An almost complete jug with the same decorative pattern was found at the Qishle (Vincenz 2021b: Fig. 8.5B.2:3).

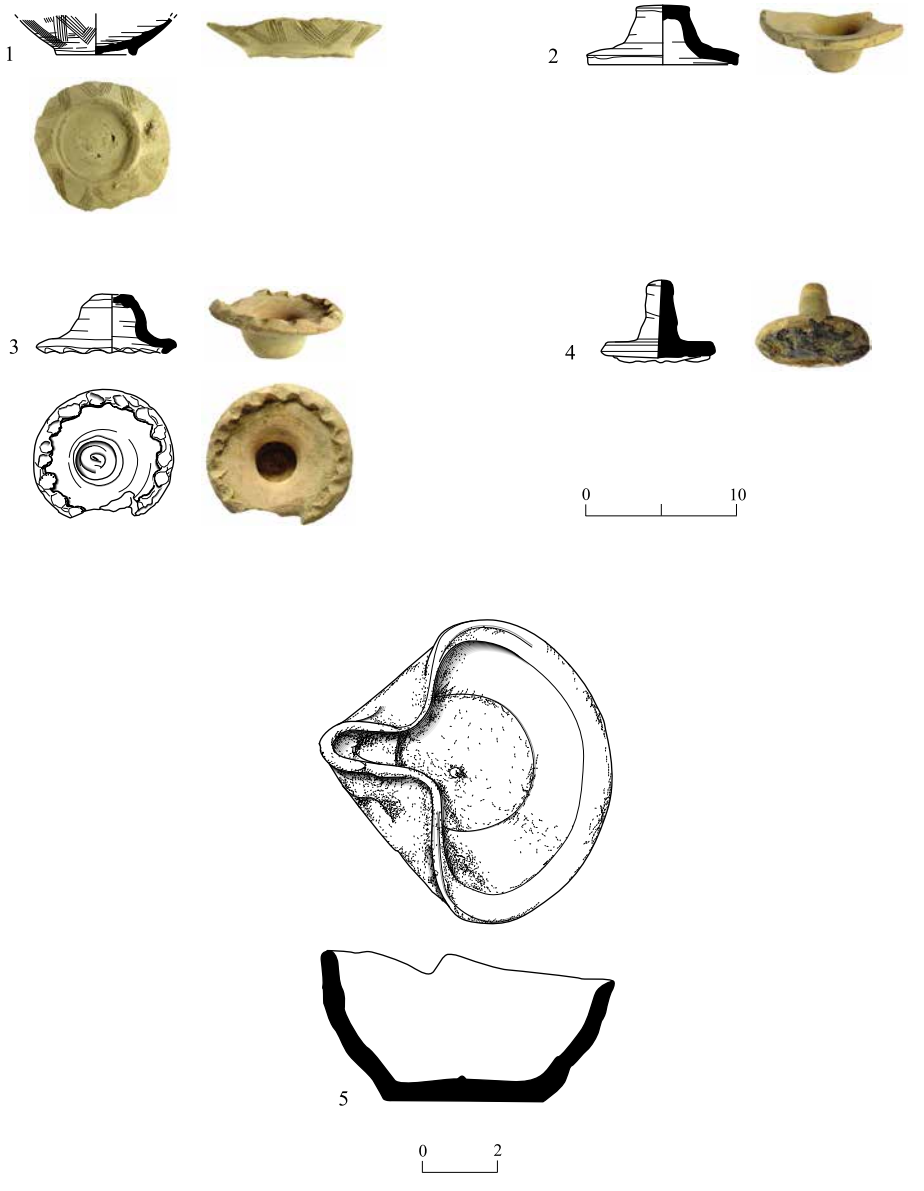

Fig. 12. Late Ottoman period ceramics: Coarse Ware jug, lids and lamp.

No.	Vessel Type	Locus	Basket	Dimension (cm)	Description
1	Jug (J-JUG-1B)	944	8420	Diam. 5.2 Base 100%	Brown ware (7.5YR 5/4) with many small white inclusions; reddish brown surface (5YR 5/4)
2	Saucer lid (J-LID-1)	763	7164/24	Diam. 9.5 Base 50%	Brown ware (7.5YR 5/4) with many small white inclusions; reddish brown surface (5YR 5/4)
3	Saucer lid (J-LID-1A)	764	7194/1	Diam. 9 Base 85%	Brown ware (7.5YR 5/4) with many small white inclusions; reddish brown surface (5YR 5/4)
4	Flat lid with knob (J-LID-2)	518	7039	Diam. 7.3 Base 100%	Brown ware (7.5YR 5/4) with many small white inclusions; reddish brown surface (5YR 5/4)
5	Saucer lamp (J-LMP-1)	131	1021/5	Length: 7.5 Width: 8 Height: 3.4	Red ware (2.5YR 5/6) with few large round white inclusions; red surface (2.5YR 5/6)

Coarse Ware Lids
Three different types of lids made of brown ware were found, two shaped like small saucers (Fig. 12:2, 3) and one flat with a knob (Fig. 12:4).

J-LID-1 and J-LID-1A (Fig. 12:2, 3).— Two lids in the shape of a small bowl with a deep central depression which forms the knob. One is simple and undecorated (Fig. 12:2), while the other has a folded rim forming a wavy pattern (Fig. 12:3). The fact that the 'lower' part is decorated would suggest that they were used as stoppers rather than lids. Many saucer-lids were found at the Qishle (Vincenz 2021b: Fig. 8.5B.3:1–6).

Type J-LID-2 (Fig. 12:4).— Lid with flat base and high rounded knob. The lower part is covered with bitumen which was probably used to seal the vessel.

Lamps
Clay oil lamps of the pinched saucer type were reintroduced in the Mamluk period after a long absence (cf. Avissar and Stern 2005:128). They are made of rather coarse ware and unglazed.

J-LMP (Fig. 12:5).— The lamp is made of red ware, has a pinched nozzle and a flat base. Coarse-ware lamps, as well as those made of Gaza Ware, were found at the Qishle (Vincenz 2021b: Fig. 8.5B:1–3). Israel mentions those made of Black Gaza Ware in his research (2006:246–251).

Smoking Pipes and Narghile (Figs. 13–17)

The pipes and narghile presented here are discussed typologically and chronologically following the Qishle typology. Relevant parallels are added to each type.

Clay Tobacco Pipes
The clay tobacco pipes, called *lüle* or *chibouk*, were used for smoking tobacco and examples with traces of tobacco have actually been found. Pipes found in Istanbul bear the inscription *dûhane*, which means tobacco in Turkish (Hayes 1992:391). The pipe consists of a bowl in various shapes with a short stem into which the long reed or metal tube was inserted for smoking. At the end of the reed is the mouthpiece, which could be of semi-precious stone such as amber. These mouthpieces are rarely recovered in archaeological excavations and the reed tube is usually not preserved. The part that is usually found in excavations is the bowl. It may be made of metal, wood, stone or clay, clay being the preferred material.

A mold made of two parts was used to fashion the bowl of the pipe. When leather dried, the shank opening and the bowl were carved out. After applying a slip to the surface, the bowl would be decorated with carved, stamped, rouletted, incised or inlaid decorations. Some decorations may have been carved into the molds as the motifs and patterns appear

unchanged on different pipes. The finish could be another layer of slip, polishing of the surface, gilding or even glazing. Then the pipe underwent final firing.

The decorations on the pipes are varied and include geometric, floral and vegetal designs such as triangles, circles, leaves, palmettes, rosettes and other stylized flowers. Sometimes inscriptions were used to decorate the pipes, usually appearing around the shank, as can be seen in a pipe from Yoqne'am (Avissar 1996a: Photos XVI.5–8: No. 4), another from Ramla (Vincenz 2011: Fig. 2:21), and several from Jerusalem, in the Jewish Quarter (Amitai-Preiss and Vincenz 2017)[7] and in the Western Wall Plaza excavations (Permit No. A-2819).[8] Two pipes with inscriptions came from the excavations at the Qishle in Yafo (Vincenz 2021b: Fig. 8.6B:28, 29). The inscriptions may comprise a blessing or a citation from a poem. Potter's marks such as rosettes or initials are found on later pipes, when some artists specialized in the making of pipes, such as the famous *Tophane* pipe-makers (Kocabaş 1963:12–13).

Seventeenth- to Early Eighteenth-Century Pipes

PIPE-J-17A (Fig. 13:1, 2).— These pipes are very small with a small, rounded bowl and a short shank with a stepped ring. Their ware is light gray, and the decorations are usually stamped, but rouletted bands are also common. Similar pipes from Belmont Castle were published by Simpson (2000: Fig. 13.1:5–8). Pipes with similar decorations were found in Ramla (Vincenz 2011: Fig. 1).

PIPE-J-17D (Fig. 13:3).— Only the shank was preserved. It is short, ending in rounded with crisscross pattern decorated wreath and a stepped ring. An incised line and a rouletted band are under the wreath. The ware is light gray with remains of a brown slip (Dekkel 2008: Fig. 4.4:1–4).

Eighteenth-Century Pipes

PIPE-J-18A (Fig. 14:1, 2).— Pipe with large round bowl and keel, which is outlined by rouletted bands. The shank is short with conical wreath and stepped ring. The ware is light gray, slipped purple and highly burnished. A similar type of pipe with a decorated bowl comes from Banias (Dekkel 2008: Fig. 4.9:45). Only the short, curved shank is preserved in the second example (Fig. 14:2). The ware is light gray and the surface is slipped red and burnished. Usually, there is a pipe maker's mark on the shank—either a dotted crescent or a rosette. Our example, however, does not have a stamp. It probably dates to the early eighteenth century.

[7] The pipe was found in a salvage excavation conducted at 7 Shone Halakhot street in the Jewish Quarter (Raphael 2015).

[8] The excavation was directed by Amit Re'em.

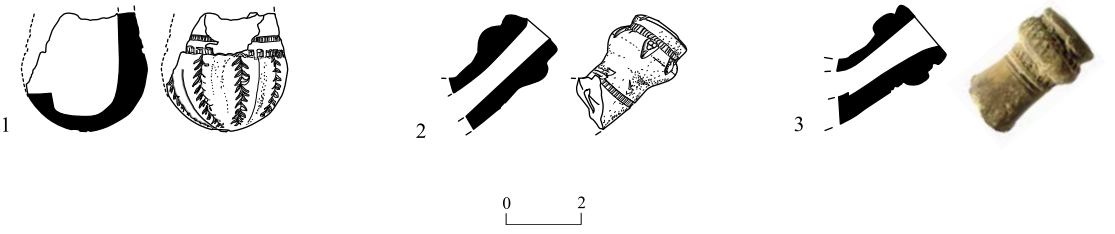

Fig. 13. Ottoman period ceramics: smoking pipes, seventeenth century.

No.	Vessel Type	Locus	Basket	Dimensions (cm)	Description
1	Pipe bowl (J-17A)	136	1025/8	Bowl diam. 1.5	Light gray ware (10YR 7/2); white surface (7.5YR 8/1); rouletted bands; rouletted band and line on upper part; round stamp on base
2	Shank (J-17A)	154	1052/4	Shank length: 3.1 Shank opening: 0.8	Light gray ware (10YR 7/2) with few small round white and black inclusions; burnished; stepped end set-off from ring by rouletted band; incised nicks on ring; rouletted line at mid-shank
3	Shank (J-17D)	732	7077	Shank length: 3.3 Shank opening: 0.9	Light brown ware; brown slip; stepped shank; rouletted net pattern and rouletted bands

PIPE-J-18E (Fig. 14:3).— Pipe with large round bowl and keel outlined with rouletted bands. The shank is short and curved with a conical end. The protruding part is decorated with a rouletted net pattern. The bowl is decorated with a rosette and incised dotted pattern arranged in panels. The ware is light brown, slipped brown and burnished (Dekkel 2008: Fig. 4.11:62; Vincenz 2021b: Fig. 8.6B:23), and dated to the end of eighteenth century.

PIPE-J-18F (Fig. 14:4).— This pipe has a round body divided into two registers: the lower has a carved decoration, while the upper is straight. The shank is short and curved. The ware is light gray and the surface is slipped red and burnished. Similar pipes with carved decoration come from the Qishle (Vincenz 2021b: Fig. 8.6B:24, 25), where they are dated to the eighteenth century.

PIPE-J-18J (Fig. 14:5, 6).— The rather short shanks of two pipes. The first (Fig. 14:5) has a rounded wreath and stepped ring. An uneven rouletted band decorates the shank and outlines the keel. The ware is reddish yellow with remains of dark yellow glaze. The second shank (Fig. 14:6) has a flaring wreath and short stepped ring preserved. A fine incised line encircles the shank. The ware is light reddish brown with remains of a dark yellow. These pipes are quite common in Yafo and have been found at the Qishle in several variations (Vincenz 2021b: Fig. 8.6B:30–36). They have been discussed at length in the report on Magen Avraham (Vincenz 2020c: Fig. 17:3–6). They are dated to the eighteenth century.

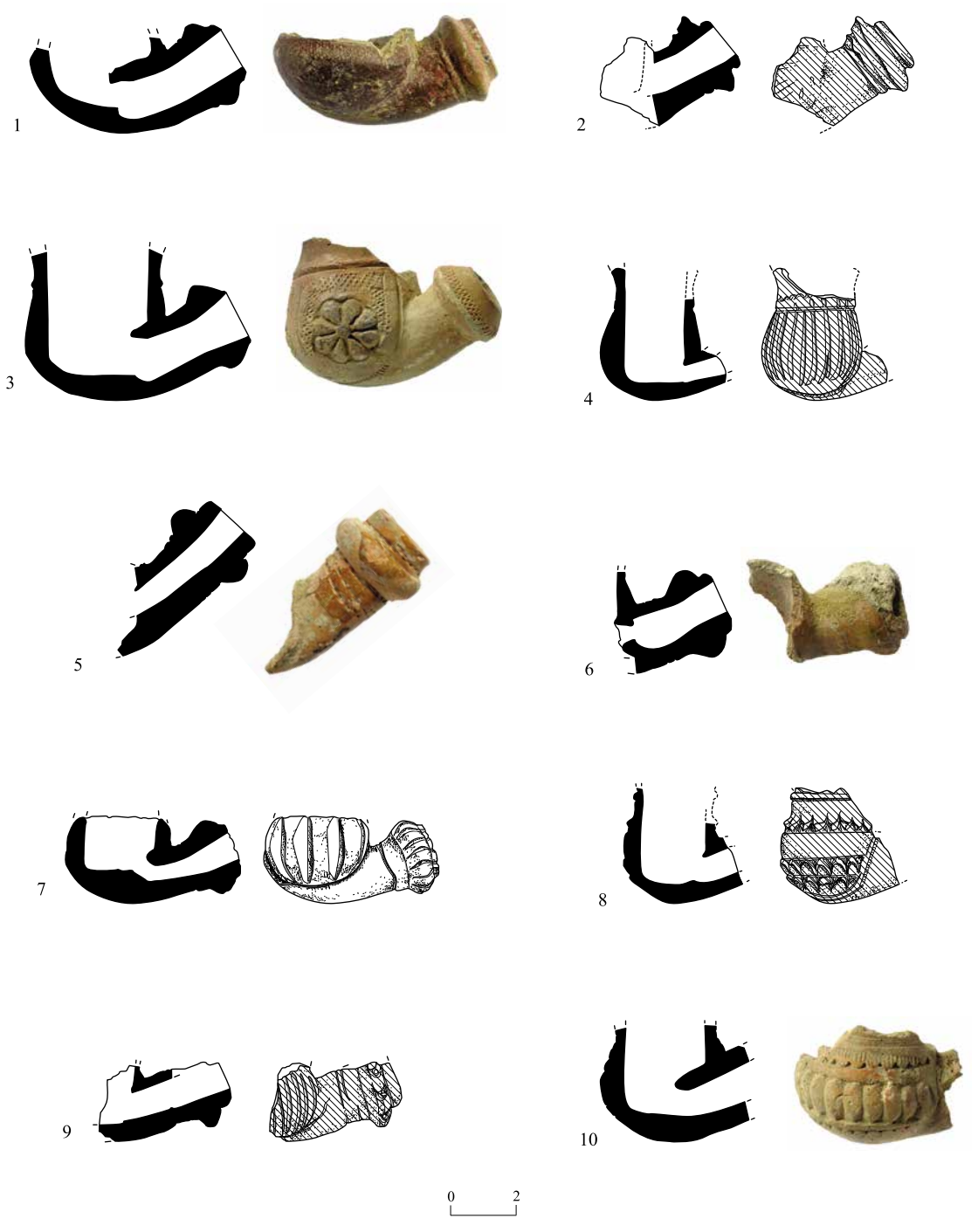

Fig. 14. Late Ottoman period ceramics: smoking pipes, eighteenth century.

◂ **Fig. 14**

No.	Vessel Type	Locus	Basket	Dimensions (cm)[i]	Description
1	Pipe bowl and shank (J-18A)	764/2	7156	Shank length: 2.8 Shank opening: 1.4	Light gray ware; dark purple slip; burnished; rouletted bands; keel outlined by rouletting
2	Shank (J-18B)	110	1009/4	Shank length: 3.2 Shank opening: 1.0	Light gray ware with few small round black inclusions; pale red surface slip (10R 4/2); burnished; short shank with stepped pointed ring with incised lines
3	Pipe bowl and shank (J-18E)	775/1	7176/1	Shank length: 3.4 Shank opening: 1.3 Bowl diam. 3.0	Light gray ware; brown slip; burnished; rouletted pattern and stamped rosette; keel outlined with rouletting
4	Pipe bowl (J-18F)	154	1052/5	Shank length: n/a Shank opening: 0.7 Bowl diam. 1.8	Light gray ware with few small angular white inclusions; pale red surface slip (10R 4/2); burnished; vertical incised lines; upper part of bowl set-off by incised line and wavy incised line; keel outlined by rouletted line
5	Shank (J-18J)		8022/1	Shank length: 5.4 Shank opening: 1.0	Reddish yellow ware (5YR 6/6); splashes of dark yellow glaze; stepped shank; rouletted lines
6	Shank (J-18J)		8022/6	Shank length: 3.1 Shank opening: 1.0	Light reddish brown ware (5YR 6/4); dark yellow glaze; thickened short shank with plaster accretions
7	Pipe bowl and shank (J-18M)	154	1052/7	Shank length: 3.3 Shank opening: 0.9 Bowl diam. 2.0	Heavily burned ware; shank with wreath end with oblique lines; deeply incised outlined keel; molded petals
8	Pipe bowl (J-18M)	131	1021/7	Shank opening: 0.7 Bowl diam. 1.9	Light gray ware with few small round black inclusions; pale red surface slip (10R 4/2); burnished; round bowl with upward turned carved petals on bottom and downward turned carved petals on upper part
9	Shank (J-18N)	110	1009/5	Shank length: 2.6 Shank opening: 0.9	Light gray ware with few small round white inclusions; pale red surface slip (10R 4/3); burnished; short shank with stepped petal shaped ring; base of bowl with impressed rosette; vertical incised lines
10	Pipe bowl (J-18P)	819	7066	n/a	Light gray ware; orange slip; large round bowl with carved decoration; keel outlined by crude rouletting

[i] n/a = not available.

PIPE-J-18M (Fig. 14:7, 8).— Large pipes with a large round bowl with straight upper part and short upturned shank. The body is decorated with carved floral and/or arabesque decorations and rouletting. The shank is also decorated with a rouletted band and the ring is carved to form petals or is decorated with incised lines. The keel is now pronounced and outlined by rouletted bands or a deep incised line. The ware is light gray with a red slip and burnished surface. Similar pipes have been found at the Qishle (Vincenz 2021b: Fig. 8.6B:40–43) and in the Magen Avraham Compound (Vincenz 2020c: Fig. 17:7). They are dated to the late eighteenth century.

PIPE- J-18N (Fig. 14:9).— Only a small part of the large bowl and the shank of the pipe were preserved. The body is decorated with carved lines. The shank is very short and upturned, and its end is thickened and carved (crenellated) or petal-shaped. The keel is either not existent or pronounced and outlined with a rouletted band and decorated with an impressed rosette. The pipe is made of light gray ware and slipped red and burnished. Pipes with a similar shank have been found at the Qishle (Vincenz 2021b: Fig. 8.6B:44, 45), where they are dated to the late eighteenth century.

PIPE- J-18P (Fig. 14:10).— Large round bowl with molded and incised decoration. There is no real keel, but it is outlined with incised wavy lines. The ware is light gray with an orange slip and not burnished. A pipe with the same decoration comes from the Qishle (Vincenz 2021b: Fig. 8.6B:49) and another from Banias (Dekkel 2008: Fig. 4.11:61). They are dated to the end of the eighteenth and beginning of nineteenth century.

Nineteenth-Century Pipes

PIPE-J-E19A (Fig. 15:1).— The shank is short curved with a conical end. The protruding part is decorated with a rouletted net pattern. The bowl seems to be made of segments produced in a mold. The ware is light gray, slipped orange and burnished (Dekkel 2008: Fig. 4.11:3). It is probably dated to the early nineteenth century.

PIPE-J-E19B (Fig. 15:2).— Large round bowl with flaring rim, and accentuated keel, outlined with rouletted lines. The bowl is decorated with stamped dotted squares arranged in a rhomb. The ware is pink, slipped brown and highly burnished. No parallel has yet been found, but the bowl, already tulip-shaped but still somewhat squat, might point to a dating to the early nineteenth century.

PIPE-J-19A (Fig. 15:3).— Only the shank of this pipe is preserved. It is long and creates a flat surface under the disk. The disk is flat and protruding. The edges of the disk are slightly incised. The end of the shank is notched. The ware is yellowish red, slipped bright orange and highly burnished. This type of pipe frequently exhibits the name of the pipemaker stamped on the shank, as found on the pipes from the Qishle (Vincenz 2021b: Fig. 8.6B:56). Similar pipes were found at Banias (Dekkel 2008: Fig. 4.12:69). They are dated to the nineteenth century.

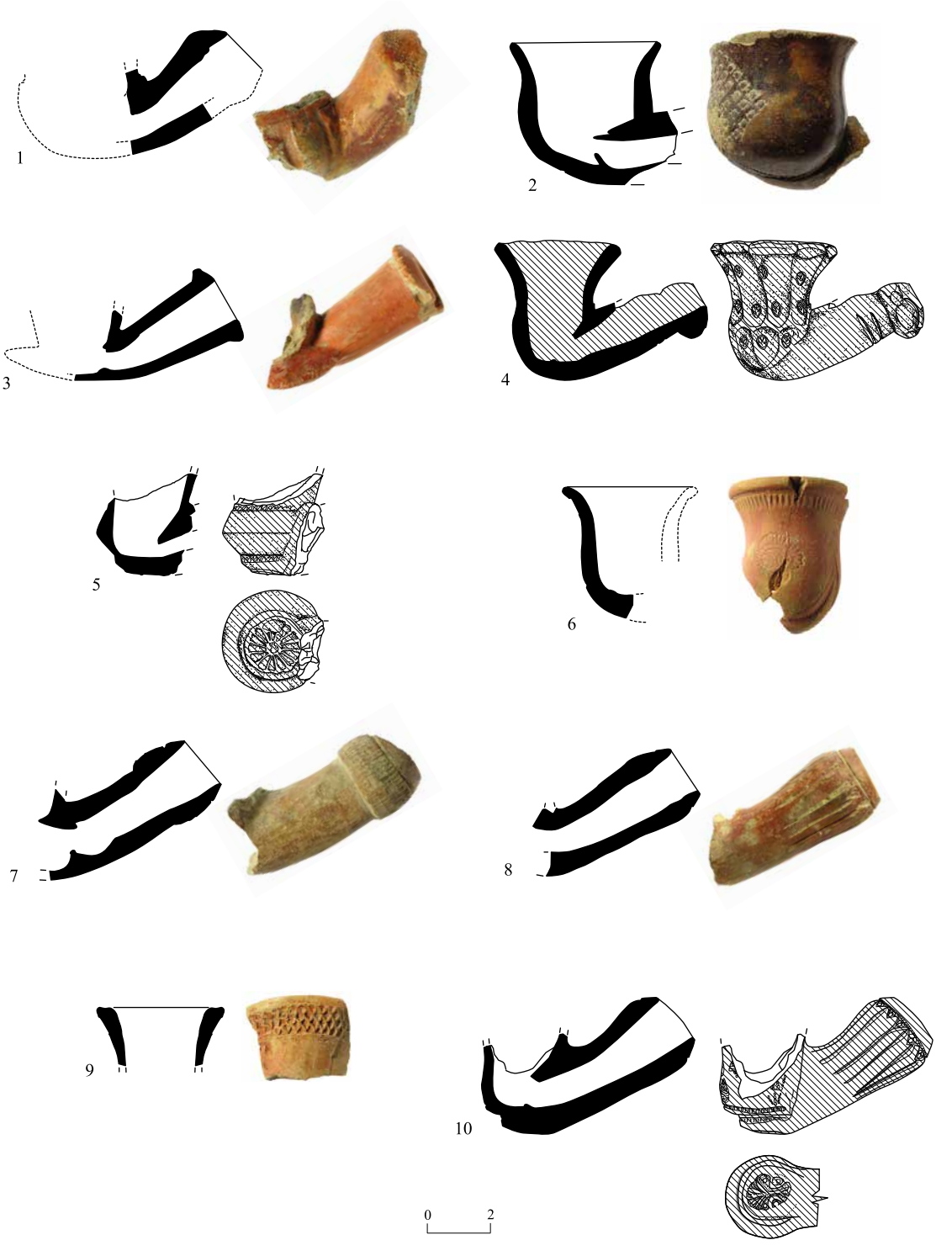

Fig. 15. Late Ottoman period ceramics: smoking pipes, nineteenth century.

◂ **Fig. 15**

No.	Vessel Type	Locus	Basket	Dimensions (cm)[i]	Description
1	Shank (J-E19A)	764	7177/3	Shank length: 4 Shank opening: 1.4	Light gray ware; orange slip; burnished; thickened shank with rouletted band at end; carved bowl
2	Pipe bowl (J-E19B)	764	7194/1	Bowl diam. 3.7	Pink ware (7.5YR 7/3); brown slip; burnished; large round bowl with rouletted pattern; keel outlined with rouletting
3	Shank (J-19A)	818	8043	Shank length: 5.5 Shank opening: 1.6	Yellowish red ware (5YR 5/6); bright orange slip; burnished; flat disk with carved edge; shank with carved edge
4	Pipe bowl and shank (J-19F)	116	1015/2	Shank length: 5.1 Shank opening: 1.6 Bowl diam. 2.8	Red ware (2.5YR 5/6) with few small angular white inclusions; red surface (2.5YR 4/6); burnished; shank with thick end with thumb nail impressions; tulip-shaped bowl with impressed tiny leaf patterns; pipe makers‘ mark Babalık?
5	Pipe bowl (J-19J)	108	1007/2	Bowl diam. 2.3	Light gray ware; pale red slip (7.5R 4/3); carinated bowl with spiked rosette on base; rouletted line sets off the lower part of bowl from base and divides the upper part; impressed decorations on upper part
6	Pipe bowl (J-19D1)	841	8081	Bowl diam. 3	Light reddish brown ware (5YR 6/4); red slip; burnished; tulip-shaped bowl with rouletted band under rim and stamped leaves; keel outlined with rouletted band
7	Shank (J-19J/K)	769	7148	Shank length: 6.1 Shank opening: 1.6	Light gray ware; dark red slip; burnished; thickened shank with double rouletted decoration
8	Shank (J-19L)	823	8044	Shank length: 5.6 Shank opening: 1.5	Light brown ware (7.5YR 6/3); dark red slip; burnished; thickened shank with incised lines
9	Pipe bowl (J-19L)	775	7201/2	n/a	Dark gray ware; dark purple slip; burnished; large round bowl with net pattern
10	Pipe bowl and shank (J-19L)	109	1008/4	Shank length: 5 Shank opening: 1.6 Bowl diam. 1.9	Light gray ware with few small angular black inclusions; reddish brown slip (2.5YR 5/4); burnished; complete shank with incised lines and impressed dotted triangles at end; bowl with off-set base with impressed leaf; bowl decorated with impressed rhombs or leaves

[i] n/a = not available.

PIPE-J-19F (Fig. 15:4).— Small pipe with a mold made bowl shaped like a flower with petals. The shank end is shaped in an octagon with pressed-in sides. These pipes are made of the characteristic red clay and slipped with the very fine clay from Lake Van. Pipe-maker marks in Arabic letters are common on these pipes. Our pipe seems to have the name of *Babalık*. Similar pipes come from the Qishle (Vincenz 2021b: Fig. 8.6B:66) and the seawall excavations in Yafo (Rauchberger 2017: Fig. 14.3:28–33), and it can be dated to the nineteenth century.

PIPE-J-19J (Fig. 15:5).— These pipes are characteristic of the later part of the nineteenth century. They are made of a variety of clays, red or gray, which are then red-slipped and burnished. The shank is long and swollen at the end and decorated with several rouletted bands of vertical lines. The bowl is relatively small, shallow and carinated, its upper part is slightly flaring. The base is rather small with a stamped star with twelve spikes and a thick central dot. The upper part of the bowl is set off by a rouletted band of vertical lines. Some of these pipes have stamped pipe-maker marks in Arabic letters. This type of pipe is rather common in Yafo and has been found at the Qishle in several variations and made of various clays (Vincenz 2021b: Fig. 8.6B:69–72). It has also been found at the seawall excavation in Yafo (Rauchberger 2017: Fig. 14.3:21–25).

PIPE-J-19K1 (Fig. 15:6).— Tulip-shaped bowl with rouletted band under rim and stamped leaves and trees. The keel is outlined by rouletted bands. The ware is light reddish brown, slipped red and burnished. Similar pipes, although undecorated, were found, for example, at the Qishle (Vincenz 2021b: Fig. 8.6B:73) and are dated to the late nineteenth century.

PIPE-J-19J/K (Fig. 15:7).— Long shank with a swollen end divided into two parts by a fine incised line. The lower part is decorated with vertical rouletted lines. The ware is light gray, slipped dark red and burnished. These shanks are usually associated with tulip-shaped pipes of the second half of the nineteenth century (for similar shanks, see, e.g., Dekkel 2008: Fig. 4.14:78; Simpson 2000: Figs. 13.5:102, 106, 110, 117, 119; 13.6:122).

PIPE-J-19L/N (Fig. 15:8).— Long conical and thick shank decorated with vertical incised lines. The end of the shank is decorated with a fine incised line. The ware is light brown slipped dark red and burnished. This type of shank is also associated with tulip-shaped pipes and pipes with disc-bases of the second half of nineteenth century (for similar shanks see, e.g., Dekkel 2008: Fig. 4.14:80; Simpson 2000: Fig. 13.7:162–169, 171).

PIPE-J-19L (Fig. 15:9).— Fragment of bowl with net pattern near rim. The ware is dark gray (from burning), slipped purple and burnished of which only fraces of it can be discerned. A similar pipe comes from the Qishle (Vincenz 2021b: Fig. 8.6B:75). Other similar pipes come from the seawall excavations in Yafo (Rauchberger 2017: Fig. 14.3:28–31). It should be dated from the late nineteenth to early twentieth century.

PIPE-J-19L (Fig. 15:10, 11).— This type of pipe is characteristic of the later part of the nineteenth century. The pipes are made of a variety of clays, from red to gray, which are then slipped red and burnished. The shank is long and swollen at the end and decorated with several rouletted bands of vertical lines forming petals. The bowls are usually tulip shaped large and small and decorated with rouletting, and stamping. The shank usually forms a small base under the bowl which is decorated with a stamped mark, palmettes mainly. These pipes are common at the Qishle (Vincenz 2021b: Fig. 8.6B:74–79) and dated to the second half of nineteenth century.

PIPE-J-19P2 (Fig. 16:1).— Shallow biconical bowl with high cylindrical rim. Molding at juncture of bowl and rim. Rim decorated with incised and stamped patterns (leaves, lines and dots). The edge of the bowl is decorated with incised lines. The keel is outlined with a rouletted band. The ware is light gray, slipped red and burnished (Robinson 1985:173, Pl. 48: C11). Probably dated to the early nineteenth century.

PIPE-J-19Q1 (Fig. 16:2).— Heavy bowl with flat base decorated with incised lines around edge and lines outlining keel. The bowl is also decorated with incised lines forming a geometric pattern. The ware is gray, slipped brown and burnished. Bowls with a flat base are quite common at Yafo and have been found in different variations at the Qishle (Vincenz 2021b: Fig. 8.6B:97, 98) where they are dated to the second half of the nineteenth century.

PIPE-J-19S (Fig. 16:3, 4).— Rather short shanks decorated with vertical lines. The end of the shank is flaring, and the ring is outlined with a rouletted band. Between the lines are stamped leaves. The lower part of the lines toward the middle of the shank is also framed by a rouletted band. The ware is light gray, slipped orange and burnished. Similar shanks have been found for example at the Qishle (Vincenz 2021b: Fig. 8.6B:104) and at the seawall excavations in Yafo (Rauchberger 2017: Fig. 14.5:65, 66), as well as in Banias (Dekkel 2008: Fig. 4.14:81). These shanks are dated to the second half of the nineteenth and the beginning of the twentieth century.

PIPE-J-19U (Fig. 16:4–7).— Small, rounded pipes made of different wares with short shank and thickened wreath. Decorations are stamped, carved and incised. They are highly burnished and polished. Similar, although not identical pipes have been found at the Qishle (Vincenz 2021b: Fig. 8.6B:107–109). They are dated to the late nineteenth century.

PIPE-J-19AG (Fig. 16:8).— Short shank with swollen end and decorated with a double rouletted band. These two bands are framed with a fine rouletted band on both sides. The ring end is furthermore decorated with carving. On the shank is a potters' mark in Arabic letters. The ware is dark gray, slipped dark gray and burnished. A similar pipe comes from Banias (Dekkel 2008: Fig. 4.14:78), where it is dated to the second half of the nineteenth century.

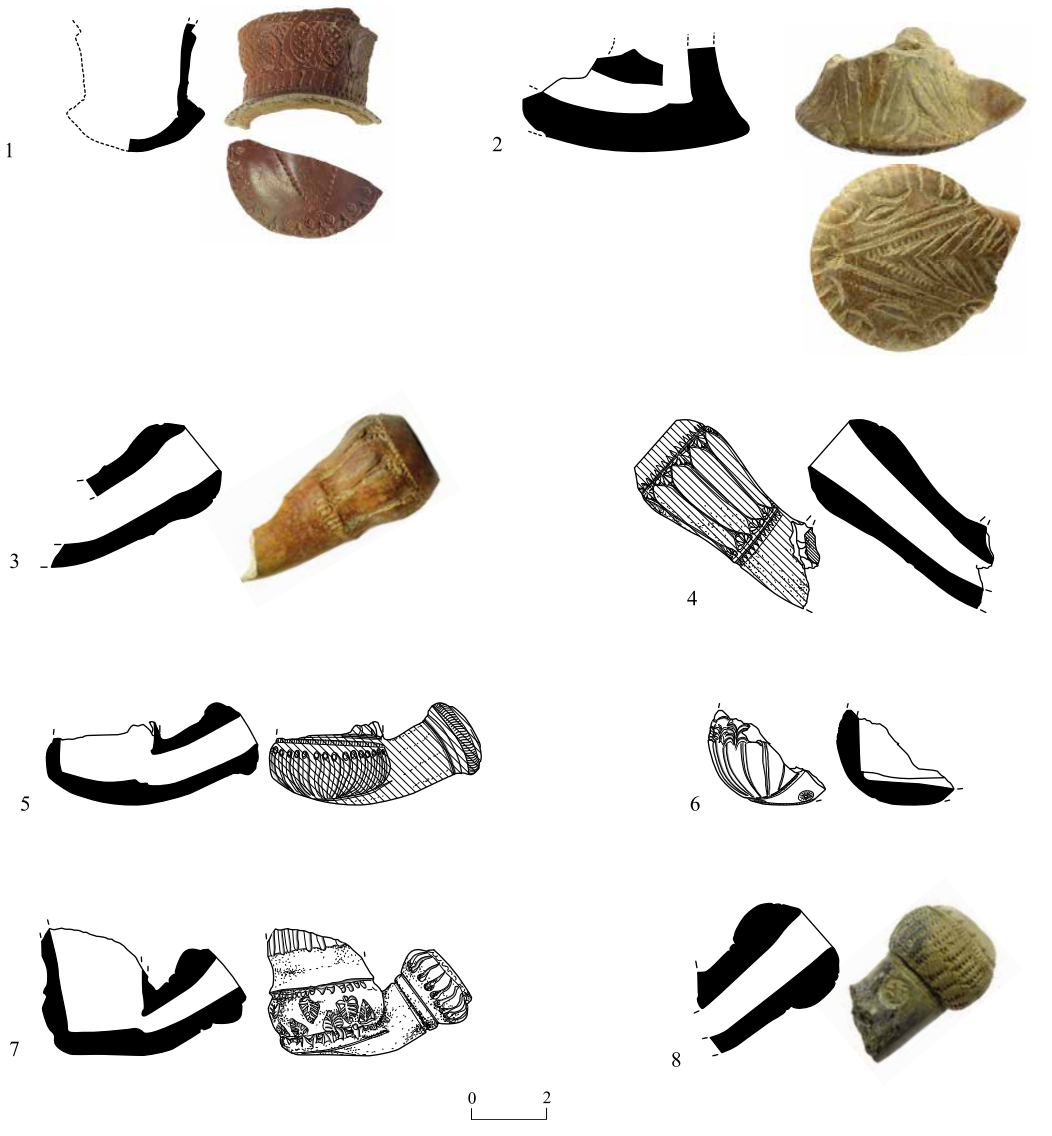

Fig. 16. Late Ottoman period ceramics: smoking pipes, nineteenth century.

No.	Type	Locus	Basket	Dimensions (cm)[i]	Description
1	Pipe bowl (J-19P2)	869	80135	n/a	Brown ware (7.5YR 5/4); dark red slip; burnished; two fragments of carinated bowl with rouletted bands, stamped and carved decoration; keel outlined with rouletted band
2	Pipe bowl (J-19Q1)	104	1048	n/a	Gray ware; brown slip; burnished; large, heavy bowl with carved decoration
3	Shank (J-19S)	811	8023	Shank length: 5.4 Shank opening: 1.6	Light gray ware; orange slip; burnished; thickened shank with incised lines, stamped leaves and rouletted bands
4	Shank (J-19S)	108	1007/3	Shank length: 6 Shank opening: 1.4	Light gray ware; weak red slip (7.5R 4/3); burnished; complete shank shaped as petals with impressed leaves at both ends; rouletted band at shank end

[i] n/a = not available.

◂ **Fig. 16** (cont.)

No.	Type	Locus	Basket	Dimensions (cm)[i]	Description
5	Pipe bowl and shank (J-19U)	109	1008/6	Shank length: 3 Shank opening: 0.8 Bowl diam. 2.3	Red ware (2.5YR 5/6) with few small angular white inclusions; yellowish red surface (5YR 5/6); burnished; complete shank facetted with stepped end with rouletted band and incised lines; bowl decorated with vertical incised lines with dotted ellipse at end; rouletted line dividing lower from missing upper part
6	Pipe bowl (J-19U)	154	1052/3	n/a	Light gray ware with few small round white and angular black inclusions; burnished; round bowl with incised vertical lines and rouletted lines; rosettes on base connected with rouletted line; upper part of bowl decorated with impressed half-moon forming wings
7	Pipe bowl and shank (J-19U)	145	1045/1	Shank length: 3 Shank opening: 1.1 Bowl diam. 2.1	Pale yellow ware (2.5Y 8/2); burnished and burned; bowl decorated with impressed leaves, rouletted lines; upper part with rouletted band; stepped shank end decorated with rouletting
8	Shank (J-19AG)	745	7121	Shank length: 4.1 Shank opening: 1.4	Dark gray ware; burnished; thickened shank with double rouletted decoration; pipe makers' mark

Narghile Pipe Bowls

The smoking of a special kind of molasses-based tobacco called *shisha*, *tombac* or *tumbak* was introduced in Istanbul during the reign of Sultan Murat IV in the first half of the seventeenth century (Bakla 2007:362). Narghile smoking was as common as the smoking of the chibouk.

Until quite recently narghile bowls were only rarely included in excavation reports. Narghile heads from Saraçhane are included in the report (Hayes 1992: Pl. 51:j, k). In Israel, two examples from ʻAkko are mentioned by Edelstein and Avissar (1997: Fig. 3), another two from Tel Yizraʼʻel (Simpson 2002: Fig. 3:22, 23) and one, from the Belmont Castle (Simpson 2000: Fig. 13.9:198). Shapiro published a few narghile heads from ʻAkko and analyzed them petrographically (2016: Fig. 1:19, 23). Many narghile heads have been found in different excavations at Yafo, and are included, for example, in the ceramic reports of the Qishle (Vincenz 2021b: Figs. 8.6B:139–156), and many narghile pipes were found on Ha-Ẓorfim street (Vincenz, forthcoming [b]). One example was published from Jerusalem Boulevard in Yafo (Vincenz 2017: Fig. 4:16). Narghile heads were found at Kefar Gabirol (Vincenz 2019a: Fig. 10:10, 11).

The narghile bowl is usually made of clay, but occasionally it may be made of porcelain.[9] There are narghile heads made of Black Gaza ware, but also other types of ware are reported.

[9] An example made of porcelain was found in the excavations on Ha-Ẓorfim street in Yafo (Vincenz, forthcoming [b]).

J-NAR-1D (Fig. 17:1).— Narghile head made of Black Gaza ware. The rim of the bowl is rolled with incised lines and the central flange shaped like petals. The stem is ribbed for better grip. This type of has been reported from the Qishle (Vincenz 2021b: Fig. 8.6D:143) and the Jerusalem Boulevard (Vincenz 2017: Fig. 4:6). Black Gaza narghile heads were dated by Israel from 1850–1920 (2006:259, Fig. 278).

J-NAR-2C (Fig. 17:2, 3).— Narghile heads made of coarse brown ware. The bowl and part of the upper body are missing. The central flange is petal-shaped and the stem is ribbed for better grip. Figure 17:3 also features a burnished surface and at the bottom of the body, there is a rouletted line. Narghile heads of this type have been found at the Qishle (Vincenz 2021b: Fig. 8.6D:147, 148). They should be dated from the nineteenth to the twentieth century.

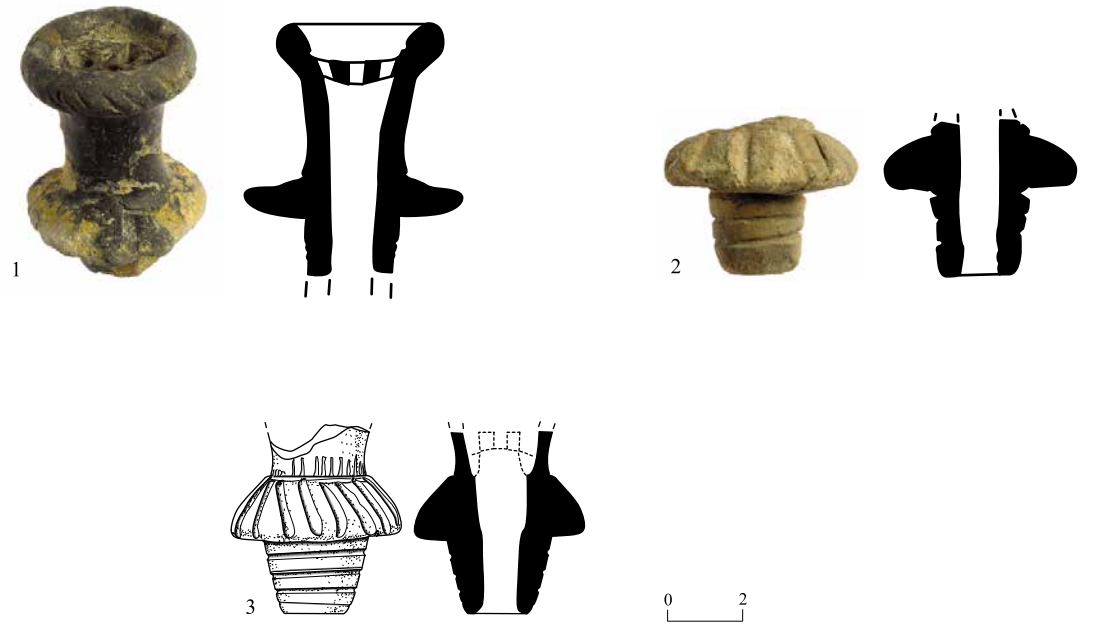

Fig. 17. Late Ottoman period ceramics: narghile heads.

No.	Type	Locus	Basket	Dimensions (cm)	Description
1	Narghile head (J-NAR-1)	874		Height: 4 Opening: 3	Black ware; burned; petal-shaped central flange and thickened rim with oblique incised lines; ribbed stem
2	Narghile head (J-NAR-2)	837	8076	Height: 3.4	Light reddish brown ware (5YR 6/4); petal-shaped central flange; ribbed stem
3	Narghile head (J-NAR-2)	195	1080	Height: 5.4 Opening: 1.4	Reddish yellow ware (5YR 7/6) with few small round black and white inclusions; burnished; petal-shaped central flange; ribbed stem

MARSEILLE ROOF TILES (Figs. 18, 19)

In 1841, the Gilardoni brothers, Joseph and Xaver, from Altkirch in Alsace, patented what would become the most popular roof tile produced: the heart tile. Only a few years later, several manufacturers in and around Marseille started to mass-produce and export these tiles all over the world, so they also reached Palestine, where they were employed abundantly. Many manufacturers are known, and all the tiles have a stamp with the name of the manufacturer and a symbol, which may be an animal or other.

Roof tiles from Israel have been studied by Ayalon (2000; 2002). Marseille roof tiles were found in the shipwreck in the Dor Lagoon (Kahanov, Cvikel and Wielinski 2012). Gordon researched Marseille roof tiles and the local production of tiles in nineteenth-century Palestine (2006). Research on these roof tiles from other parts of the Ottoman Empire includes works regarding the modernization process of the Ottoman architecture (Çiftçi and Yergün 2010) and imports and local production (Eldem 2018).

Most of the tiles from Yafo are well-known and found abundantly in sites dated to the Late Ottoman and early twentieth century. The tile bearing a camel stamp (Fig. 19:13) by the Pradel brothers is rather rare, and Ayalon states that he found only one example in the Monastery of the Silent Monks (Ayalon 2000:129).

GUICHARD (Fig. 18).— Tiles produced by Guichard & Cie from Seon St. André with the symbol of the bee from *Seon St. André*, Marseille.

Fig. 18 ▸

No.	Locus[i]	Basket[i]	Description
1	n/a	n/a	Yellowish red ware (5YR 5/6) with large white inclusions; GUICHARD & CIE SEON ST ANDRE MARSEILLE circles with 17 and 3 and impressed P
2	892	80242/4	Yellowish red ware (5YR 5/6) with large pottery inclusions; GUICHARD & CIE
3	882	n/a	Yellowish red ware (5YR 5/6) with large white inclusions; side piece; GUICHARD &
4	889	80131/2	Yellowish red ware (5YR 5/6) with large pottery inclusions; SEON ST ANDRE
5	885	80216/2	Yellowish red ware (5YR 5/6) with large white inclusions; side piece with circle and 18
6	913	80333/1	Yellowish red ware (5YR 5/6) with large pottery inclusions; corner piece with bee symbol
7	881	80228	Yellowish red ware (5YR 5/6) with large pottery inclusions; fragment with bee symbol
8	861	80226/5	Yellowish red ware (5YR 5/6) with large white inclusions; fragment with bee symbol

[i] n/a = not available.

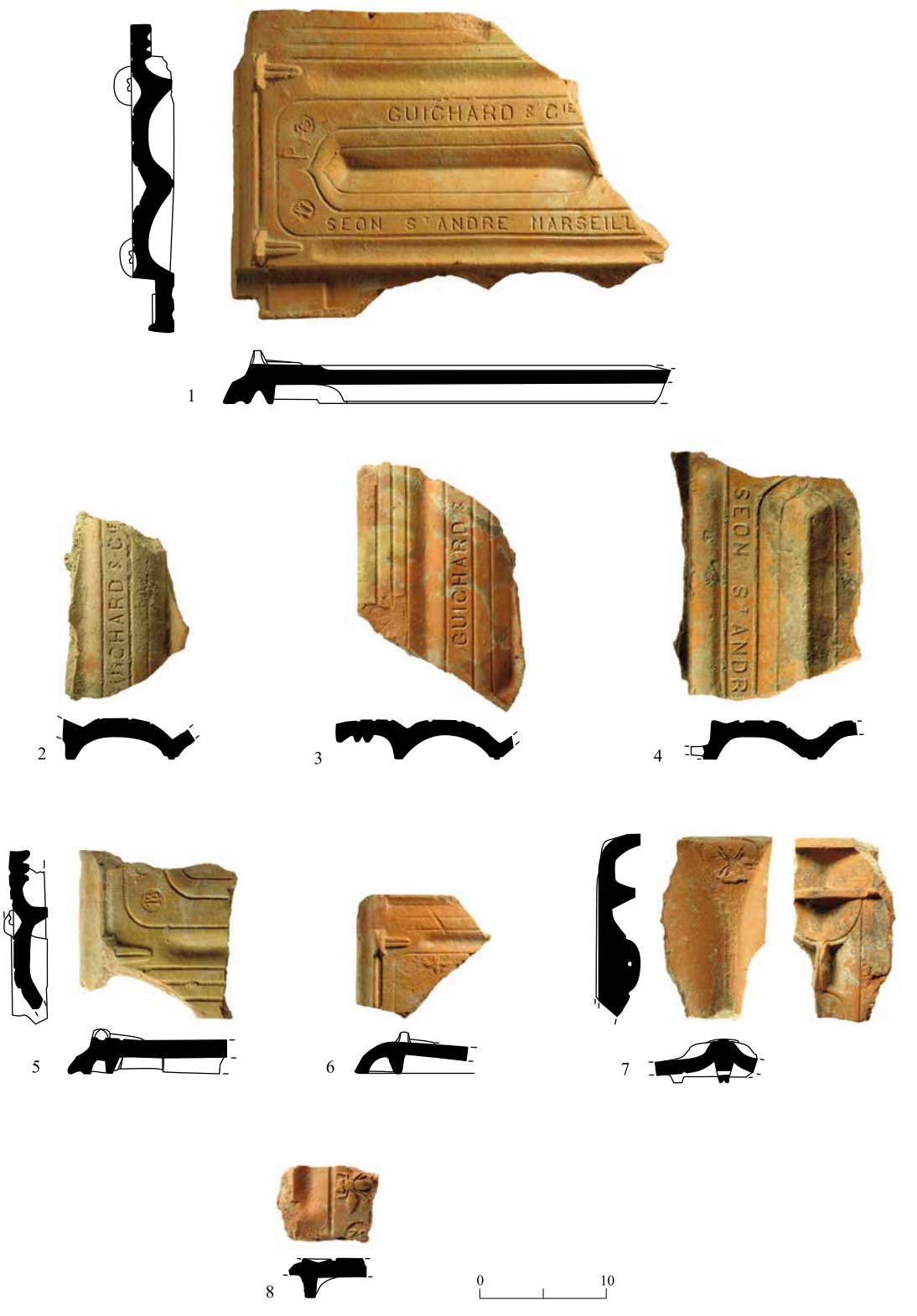

Fig. 18. Roof tiles: Marseille: Guichard & Cie.

SACOMAN (Fig. 19:1–4).— Tiles produced by *Antoine Sacoman*. The factory name Usine La Plata is also mentioned; their symbol was a star.

ROMAIN BOYER (Fig. 19:5).— This tile, with a swan symbol, was produced by Romain Boyer from *La Coudoulière*, a suburb of Marseille.

ROUX (Fig. 19:6–12).— These tiles, with a heart symbol, were produced by the Frères Roux from *St. André*, another suburb of Marseille.

Fig. 19 ▸

No.	Locus	Basket	Description
1	n/a	n/a	Yellowish red ware (5YR 5/6) with large pottery inclusions; fragment with guilloches; ANT
2	875	80174/1	Yellowish red ware (5YR 5/6) with large pottery inclusions; USINE LAP
3	n/a	n/a	Yellowish red ware (5YR 5/6) with large pottery inclusions; side piece; SINE LA PLAT
4	805	8005/5	Yellowish red ware (5YR 5/6) with large pottery inclusions; five-pointed star
5	947	8424/3	Yellowish red ware (5YR 5/6) with large pottery inclusions; side piece with swan
6	865	80216/1	Yellowish red ware (5YR 5/6) with large pottery inclusions; heart (?) and circle with 17 and P
7	860	80106/3	Yellowish red ware (5YR 5/6) with large pottery inclusions; corner piece with heart symbol
8	860	80114/1	Yellowish red ware (5YR 5/6) with large pottery inclusions; side piece with heart and 1, circle with a
9	890	n/a	Yellowish red ware (5YR 5/6) with large pottery inclusions; S.G.D.G. MARSEILLE
10	882	n/a	Yellowish red ware (5YR 5/6) with large pottery inclusions; side piece with heart and eight-spiked rosette
11	868	80169/3	Yellowish red ware (5YR 5/6) with large pottery inclusions; fECAILLE BREVETES; heart symbol
12	163	163	Yellowish red ware (5YR 5/6) with large pottery inclusions; side piece; ANDE ECAI, BRE
13	840	8040/1	Yellowish red ware (5YR 5/6) with large pottery inclusions; side piece with camel
14	850	8084/10	Yellowish red ware (5YR 5/6) with large pottery inclusions; OUR
15	902	80270/1	Yellowish red ware (5YR 5/6) with large pottery inclusions; corner piece; VENETA PORDENONE NE (ITALIA)
16	834	8073/5	Yellowish red ware (5YR 5/6) with large pottery inclusions; fragment with round stamp; OUCE
17	n/a	n/a	Yellowish red ware (5YR 5/6) with large pottery inclusions; side piece with grooves
18	882	n/a	Yellowish red ware (5YR 5/6) with large pottery inclusions; side piece with grooves

[i] n/a = not available.

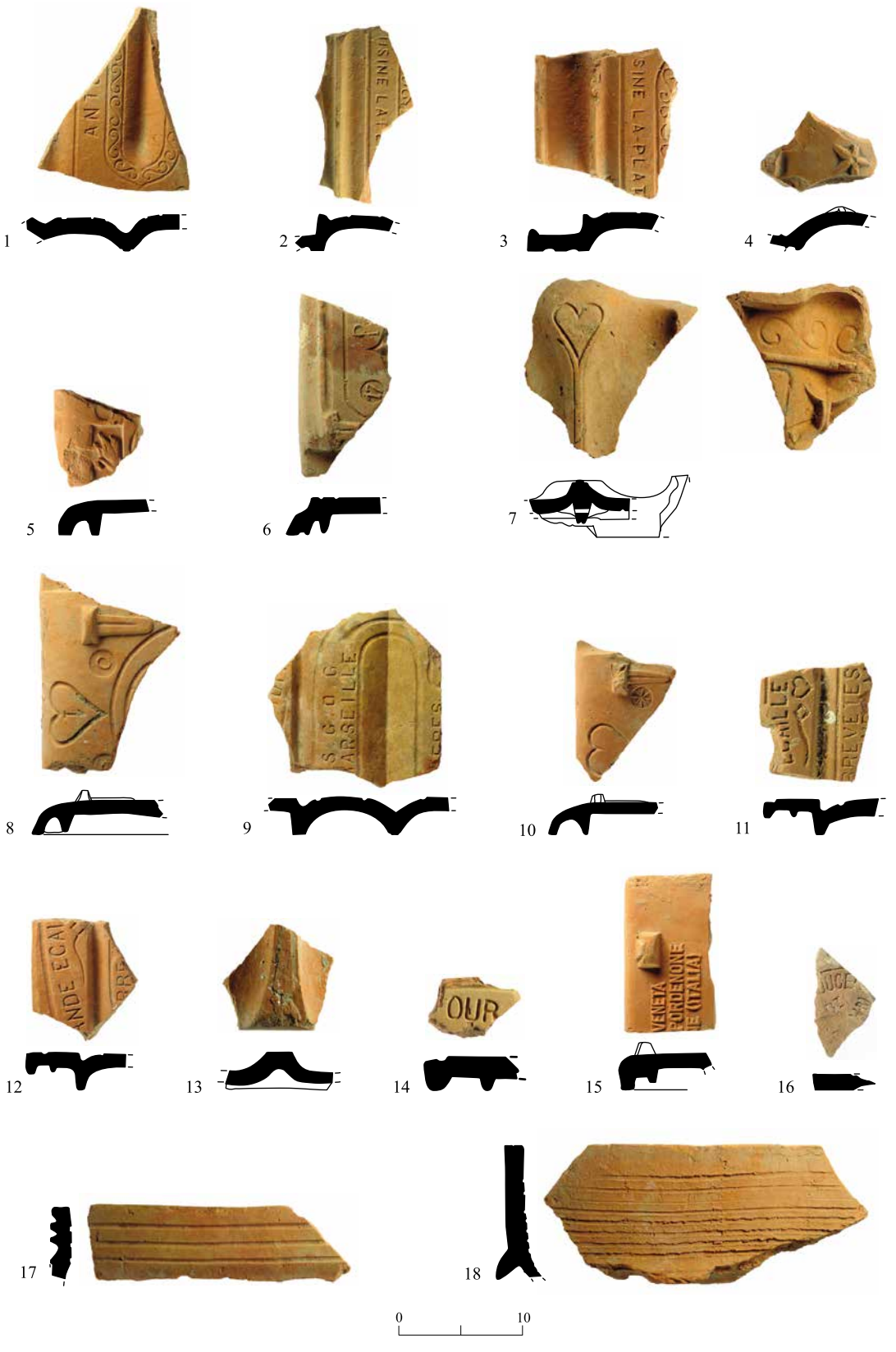

Fig. 19. Roof tiles: Marseille and Italy.

PRADEL (Fig. 19:13).— The brothers used a camel as their symbol.

MOURAILLE (Fig. 19:14).—This small fragment could be identified as having been made by *J.M. Mouraille, from Seon, St André*, Marseille.

Italian Tile (Fig. 19:15).— The corner piece of this tile is inscribed with the place of production: *Pordenone*, in the region *Veneto* in Italy.

Unidentified Tiles (Fig. 19:16–18).— Fragment No. 16, with the letters OUCE, could not be identified; Fragment Nos. 17, 18 bear grooves.

CONCLUSIONS

The Late Ottoman ceramic assemblage is varied and can be dated from the eighteenth to the early twentieth century. Fine tableware made of hardpaste and porcelain was imported from Europe, while glazed earthenware came from the provinces of the Ottoman Empire. France played a major role in the import of Marseille roof tiles; the many tiles found in the dump (L897) may reflect the large quantities of tiles that arrived in Yafo and served to cover the local roofs. Local pottery production is attested by the Black Gaza ware and other coarse wares, which were also found abundantly in the area.

The pipes are mainly from the eighteenth and nineteenth centuries, only three examples dating earlier. They show a wide variety, and they seem to be both imported and locally made (but should be tested petrographically).

Pre-Ottoman Ceramics

In this section are included fragments dated to earlier periods, found in fills not connected to any building activity, reflecting the earlier periods known from Yafo. Persian, Hellenistic, Roman and Byzantine pottery from Kaplan's excavations has been published by Tsuf (2018). More of this material has been published in various reports and mentioned below. Some of the Crusader pottery was published by Burke (2011), and some appears in various reports and cited below. A few representative fragments are presented here.

PERSIAN–HELLENISTIC PERIODS (Fig. 20)

Mortaria (Fig. 20:1, 2).— The mortaria have flaring walls and a thickened rim on the exterior giving it a triangular appearance. The vessels usually have a ring-base or a flat base, as in Fig. 20:2 (Tsuf 2018:165, Fig. 9.15:315–320, with a discussion on provenance therein). They are dated to the fifth century BCE.

Jar with Sloping Shoulders (Fig. 20:3).— Another Persian-period jar has a sack shaped body, sloping shoulders, a short neck and a knobbed rim. This jar type was common in the

fifth to late fourth centuries BCE (Tsuf 2018:210, Fig. 9.31:549), and was also reported from Yehuda Ha-Yammit street (Haddad and Rauchberger 2019: Fig. 5:8).

Jar with Straight Shoulders (Fig. 20:4).— The most common storage jar of the Persian period has straight shoulders and a short to very short neck. This type was previously found in Yafo in Kaplan's excavations and termed 'jar with biconic body' (Tsuf 2018:209, Fig. 9.31:539, 540). Its appearance is dated to the fifth to early fourth centuries BCE (Tsuf 2018:209, with discussion and references therein). Persian jars were also found in the excavations of Yehuda Ha-Yammit street in Yafo (Haddad and Rauchberger 2019: Fig. 5:7).

Black-Slipped Bowl with Incurved Rim (Fig. 20:5).— This bowl has an incurved rim and is slipped on both sides with a dull black slip. These bowls were common during the Hellenistic period, and they were found abundantly in Yafo (see Tsuf 2018:106, Fig. 9.2:35–46, with further references therein; Haddad and Rauchberger 2019: Fig. 5:1–3). They are dated from the late fourth or third century to the early first century BCE.

Red-Slipped Bowl with High Ring Base (Fig. 20:6).— This base belongs to a bowl of the Eastern Sigillata A group which was common in the eastern Mediterranean from the late second century BCE to the second century CE (for a bowl with similar foot, see Tsuf 2018: Fig. 9.57:927).

Storage Jar with Low Collared Neck (Fig. 20:7).— This type of storage jar has a cylindrical body, and a characteristic folded rim which forms a ridge (collar) at the bottom, covering part of the neck. Two loop-handles are positioned on the upper shoulder. This is the most common type of jar of the Late Hellenistic to Early Roman period. In Yafo, these jars are quite common (Tsuf 2018:233–234, Fig. 9.35:601–618, with additional references therein). They are dated from the second century BCE to the first century CE.

Pointed Amphora Toe (Fig. 20:8).— The base of this amphora has a pointed end and a ring around the base. It is possibly Knidian, and it should be dated to the Hellenistic period (Guz-Zilberstein 1995:318, Fig. 6.45:13).

Painted Lekythos (Fig. 20:9).— This fragment is the lower part of a *lekythos* with a broken base; the shoulder and rim are missing. Its identification was based on the well-levigated, fine ware, and the decoration. The vessel is decorated in bands, one with a light slip, which carries the palmette decoration, while the other bands seem to be plain red. This type of vessel is not very common in Israel, but several fragments have been found at Dor, where they are assigned to the Beldam workshop and dated to the second quarter of the fifth century BCE (Mook and Coulson 1995:96, Fig. 3.9:1–3). Fragments of similar vessels have been found in other sites, such as Rishon LeZion (Peter Gendelman, pers. comm.). Fragments of *lekythoi* were also found in Kaplan's excavations (Tsuf 2018:265, Fig. 9.47:811, 812). *Lekythoi* are usually

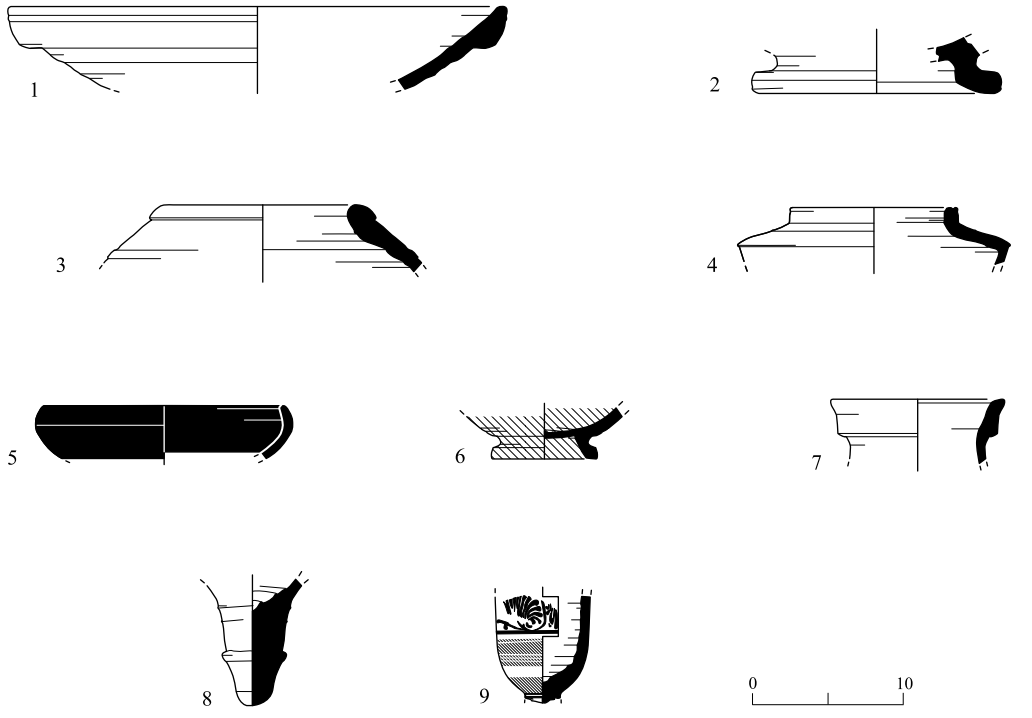

Fig. 20. Persian and Hellenistic ceramics.

No.	Vessel Type	Locus	Basket	Dimensions (cm)[i]	Description
1	Mortarium	194	1077/2	Diam. 32 Rim 8%	Light yellowish brown ware (10YR 6/4) with few small angular white and black inclusions; pale yellow surface (2.5Y 7/3)
2	Mortarium	751	7138	Base diam. 16 Base 17%	Pink ware (7.5YR 7/2) with many small black and white inclusions; light gray surface (10YR 7/2)
3	Storage Jar	157	1057	Diam. 10 Rim 7%	Reddish yellow ware (7.5YR 6/6) with few small angular black inclusions; reddish yellow surface (7.5YR 7/6)
4	Storage Jar	751	7238	Diam. 9 Rim 20%	Light reddish brown ware (5YR 6/4) with many small white and large ceramic inclusions
5	Bowl	751	7133	Diam. 10 Rim 6%	Gray ware with dull black slip
6	Bowl	906	80274/2	Base diam. 6.5 Base 55%	Pink ware (5YR 7/4); red dull slip (2.5YR 5/6)
7	Storage Jar	197	1079/1	Diam. 10 Rim 12%	Reddish yellow ware(5YR 7/6) with lighter core with few small angular black inclusions; pink surface (7.5YR 7/4)
8	Amphora	766	7195/1	n/a	Light red ware (2.5YR 6/6) with few small black and white inclusions; pink surface (5YR 7/3)
9	Lekythos	135	1024	n/a	Reddish yellow ware (7.5YR 6/6); Ext.with black painted decoration; painted bands reddish brown to dark reddish brown (2.5YR 4/4–3/4)

[i] n/a = not available.

associated with burial contexts, and the vicinity of a burial ground near Yehuda Ha-Yammit street would explain its presence (see Haddad and Rauchberger 2019:26*).

Roman Period (Fig. 21)

Syrian Mortaria (Fig. 21:1, 2).— Two fragments made of heavy coarse ware feature a rounded ledge rim, the first with incised dots on the rim. Their shape identifies them as North Syrian mortaria. Hayes was the first to identify these large vessels as mortaria, establishing that they were produced at Ras el-Basit in Northern Syria, and widely exported in the Mediterranean area, in Syria, Egypt, Cyprus and the Greek mainland (Hayes 1967). These mortaria arrived as far as Rome, Germany and Britain, and since the publication, many more have been identified and published (for example, Weinberg 1988; Stern 2000; Johnson 2008a; 2008b). Vallerin (1994) has published an article on mortaria from Ras el-Bassit with drawings, photographs and a comprehensive bibliography, most of these mortaria being the variant with the wide stamped ledge rim, although there was also a variant with a rectangular rim. Our examples have the wide ledge rim and deep body with flaring walls and flat base, some of them also having decorative patterns, such as the incised circles in Fig. 21:1. Many mortaria have been found at Caesarea Maritima (Johnson 2008b:38–39, Nos. 276–281), and also in Ashqelon (Johnson 2008a:109–113). Syrian mortaria with rounded ledge rims were found in Yafo in Kaplan's excavations (Tsuf 2018:170–171, Fig. 9.18:342–348). The North Syrian mortaria are usually dated to the third and fourth centuries CE, and they were possibly in use even later.

Shallow Grooved Mortarium (Fig. 21:3).— The mortarium with the deep groove under the rim is probably also an import, due to the gold mica flakes in the ware. No such rim shape, however, has been reported from Ras el-Basit. It is possible that this vessel was produced in another workshop in Northern Syria. A similar vessel has been found at Caesarea, but it was made of a different, less coarse ware (Johnson 2008b:45, No. 387).

Casserole with Deeply Grooved Rim (Fig. 21:4).— The body of this vessel is deep, and it lacks a neck. The rim is sharply everted ending in a hook, thus forming a deep groove. This type seems to be rather common in Yafo and a large assemblage was found in a house excavated by Kaplan (Tsuf 2018:179, Fig. 9.21:392). Tsuf notes that this type was also common in Caesarea (Tsuf 2018:179), and a similar vessel was also published by Johnson (2008b:74, No. 858). This type is dated from the second to fourth centuries CE.

Small Amphora with Ribbed Body (Fig. 21:5).— Only the round toe and part of the ribbed body of this small amphora is preserved. The clay color and toe shape suggest that it belongs to Peacock and Williams' Amphora Class 52/53 (Johnson 2008b:107, No. 1283). This amphora originated in Egypt and is dated from the fourth to seventh century CE.

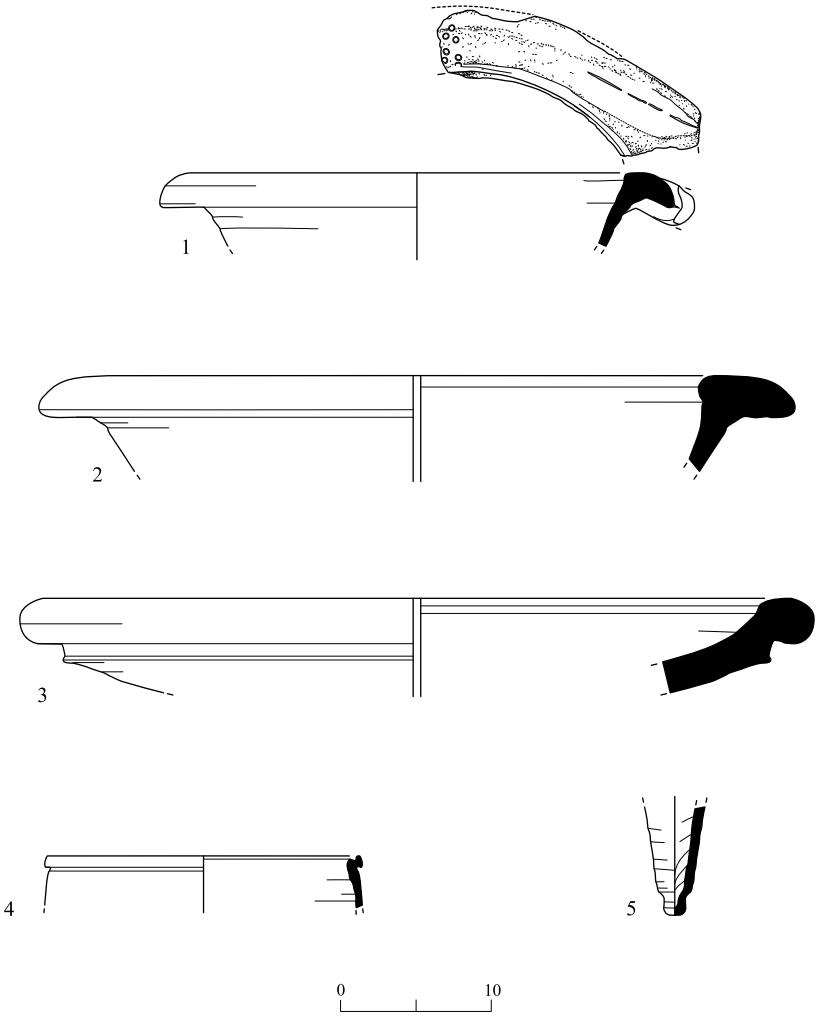

Fig. 21. Roman ceramics.

No.	Vessel Type	Locus	Basket	Dimension (cm)[i]	Description
1	Mortarium	139	1041	Diam. 30 Rim 15%	Reddish brown to yellowish red ware (5YR 4/4–4/6) with many large round and angular white and small micaceous inclusions; brown surface (7.5YR 4/3)
2	Mortarium	135	1024/2	Diam. 32 Rim 7%	Brown ware (7.5YR 5/4) with thin light red core (2.5YR 6/6) with many small and large round and angular black and white inclusions; light reddish brown surface (5YR 6/4)
3	Mortarium	154	1052/1	n/a	Reddish yellow ware (5YR 6/6) with many small and large round and angular black and white inclusions and small round gold mica flakes; pink surface (7.5YR 7/4)
4	Casserole	154	1052/2	Diam. 18 Rim 7%	Brown ware (7.5YR 5/4) with few small round white inclusions; reddish brown surface (5YR 5/4)
5	Amphora	110	1009/2	n/a	Strong brown ware (7.5YR 5/6) with thick gray core and few small angular white inclusions; light brownish gray to pale brown surface (10YR 6/2–6/3)

[i] n/a = not available.

Byzantine Ceramics (Fig. 22)

CRS Form 1 Bowl (Fig. 22:1).— This is a simple-shaped bowl with an inverted round rim. These bowls had a tapering foot of varying height. They are usually undecorated but may have burnished bands. The bowls appeared in the late fourth century CE and continued to be produced into the seventh century CE (for a detailed discussion, see Hayes 1972:372–373, Fig. 80:1–4). They were found in Yafo, for example, in Kaplan's excavations (Tsuf 2018:301–302, Fig. 9.63:1038–1040), and in Caesarea (Johnson 2008b:26, Nos. 67, 68) and Ashqelon (Johnson 2008a:54).

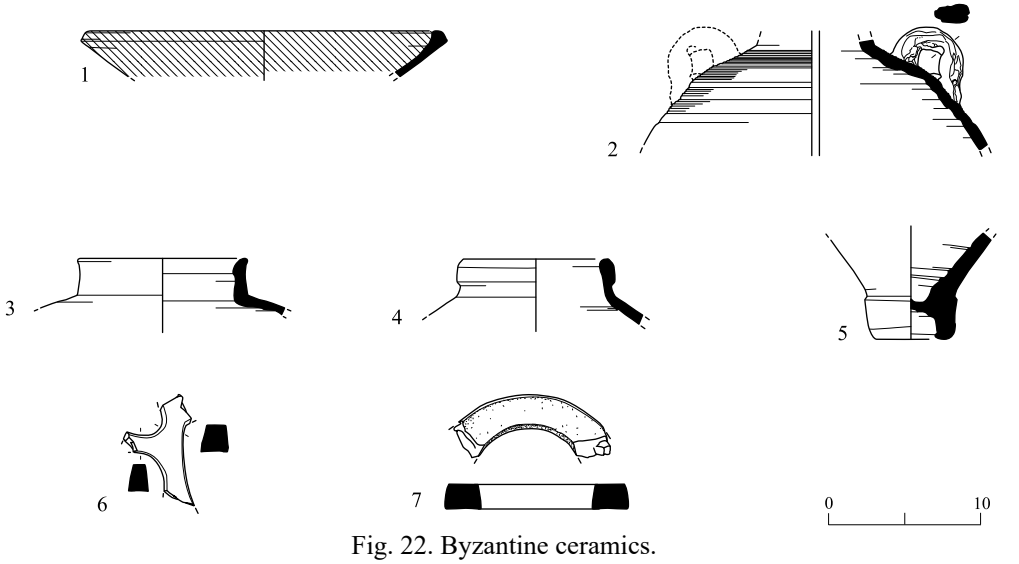

Fig. 22. Byzantine ceramics.

No.	Vessel Type	Locus	Basket	Dimension (cm)[i]	Description
1	CRS Bowl	181	1069/2	Diam. 22 Rim 7%	Red ware (2.5YR 5/6) with few small round white inclusions; red surface slip (10R 5/6)
2	Storage Jar	110	1009/1	n/a	Red ware (2.5YR 4/6) with few small round black and white inclusions; reddish brown surface (2.5YR 6/4)
3	Storage Jar	135	1024/5	Diam. 10 Rim 12%	Strong brown ware (7.5YR 5/6) with few small angular black inclusions; light brown surface (7.5YR 6/4)
4	Storage Jar	188	1075	Diam. 8 Rim 12%	Red ware (2.5YR 5/6) with thick gray core and many small round white inclusions; light red surface (2.5YR 7/6)
5	Base of Amphora	135	1024/1	Diam. 5	Light reddish brown to reddish yellow ware (5YR 6/4–6/6) with thick gray core and many small round and angular white and black inclusions; light reddish brown surface (5YR 6/4)
6	Lantern	890	86231/6	n/a	Light red ware (2.5YR 6/6)
7	Lantern	990	80240	n/a	Light red ware (2.5YR 6/6)

[i] n/a = not available.

Bag-Shaped Storage Jars (Fig. 22:2–4).— The three jar fragments presented here have a bag-shaped body covered with light or dense ribbing. Loop handles are positioned on the upper part of the body (Fig. 22:2). The main differences are in the neck and rim shapes. Two variants are shown here: a short internally beveled neck (Fig. 22:3) and an externally thickened rim (Fig. 22:4). The first two jars are dated to the fifth–sixth centuries CE (cf. Magness 1993: 224, Storage Jar Form 4B), the third to the seventh century CE (Johnson 2008b:91–92, No. 1094).

Amphora Base (Fig. 22:5).— Featured here is an open hollow foot. The body of this amphora was probably ovoid. A similar base from Caesarea has a different ware color (Johnson 2008b:104, No. 1249). Our example may be related to the Caesarea type, dated to the third–fourth centuries CE.

Lantern Fragments (Fig. 22:6, 7).— These two fragments could have been part of lanterns. Fenestrated lanterns were fairly common during the Byzantine period (Magness 1993: Figs. 3:1–3; 4:9, 10; Oleson et al. 1994: Fig. 21: TC2).

EARLY ISLAMIC PERIOD (Fig. 23)

Buff-Ware Bowl (Fig. 23:1).— The bowl has an incurved round rim. It is made of the characteristic light buff-ware of the Early Islamic period. Bowls of this type have been found in many sites dated to the Early Islamic period, such as Ramla (Kletter 2005: Fig. 14:5; Cytryn-Silverman 2010: Pls. 9.5:1, 3; 9.9:3; Shmueli 2016: Fig. 14:3) and in a farmhouse north of Tel Lod (Haddad 2013: Fig. 10:1, 2).

Fine Ware Bowls (Fig. 23:2, 3).— Two rather deep hemispherical bowls with an inverted round rim. They are made of thin hard-fired ware and their surfaces feature burnished bands. Similar fine ware bowls were produced from the Byzantine period (Magness 1993:165–171). These two bowls seem to be related to Magness' Form 1E bowls with a deep hemispherical body that are dated to the eighth to ninth centuries CE. Bowls of this type were found in Ramla (Cytryn-Silverman 2010: Pls. 9.3:8; 9.5:9, 10). They should be dated from the eighth–ninth, or maybe the tenth century CE.

Glazed Bowl (Fig. 23:4).— This bowl has an everted rim, and green lines applied on a white slip and then glazed with a transparent glaze. The bowl belongs to the group of Early Islamic fine glazed bowls and should be dated to the ninth century CE (see Avissar 1996b:78–81; Cytryn-Silverman 2010:110).

Animal Figurines (Fig. 23:5, 6).— Zoomorphic vessels are a common find on sites with Early Islamic layers. They usually consist of a head and body of a mammal with the mouth serving as a spout and the body as the container for the liquid. Some have handles extending

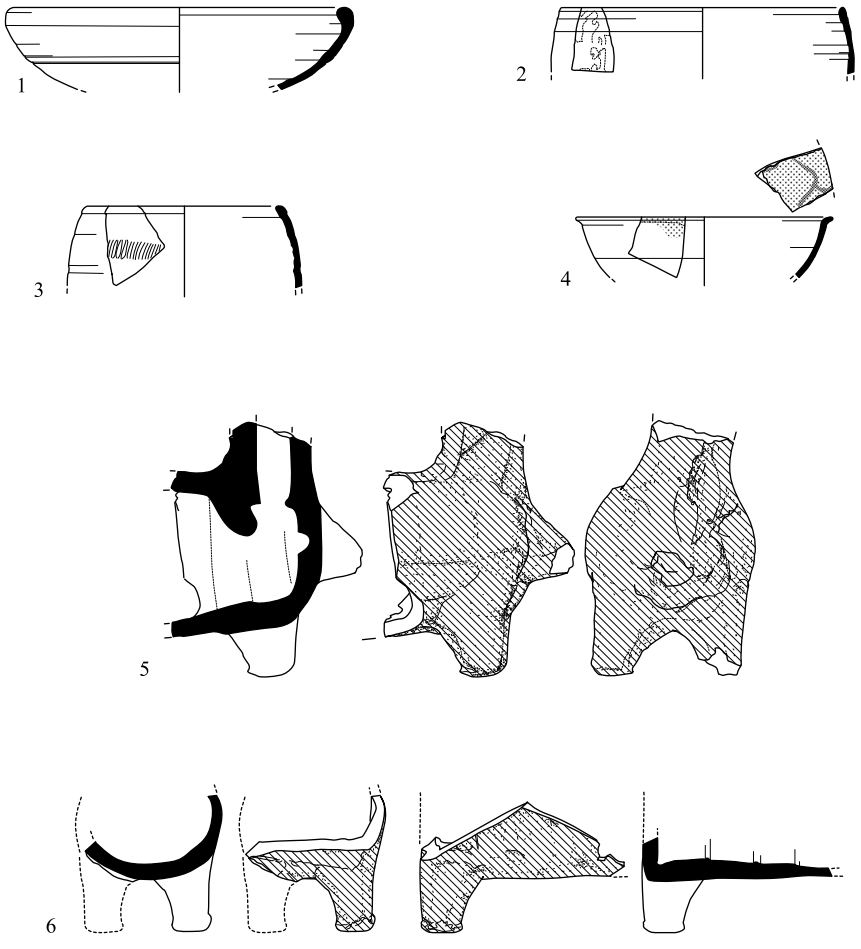

Fig. 23. Early Islamic ceramics.

No.	Vessel Type	Locus	Basket	Dimension (cm)	Ware and Surface Color
1	Bowl	135	1024/6	Diam. 22 Rim 10%	Very pale brown ware (10YR 8/3) with few small round black inclusions; pale yellow surface (2.5Y 8/2)
2	Bowl	197	1079/2	Diam. 12 Rim 7%	Reddish yellow ware (5YR 6/6) with many large angular white inclusions; pink surface (5YR 7/4)
3	Bowl	139	1041	Diam. 14 Rim <5%	Yellowish red ware (5YR 5/6) with gray core and few small angular white inclusions; pink and reddish yellow surface (5YR 7/4 and 5YR 6/6); burnished bands
4	Bowl	181	1069/3	Diam. 16 Rim 5%	Reddish yellow ware (5YR 6/6) with few small white round inclusions; green painted lines on white slip and transparent glaze
5	Animal Figurine	138	1033	Length: 7.5 Height: 6	Light reddish brown ware (5YR 6/4) with few small angular white inclusions; light red slip (2.5YR 6/6)
6	Animal Figurine	138	1031/1	Length: 5 Height: 4	Pale brown ware (10YR 6/3) with few small angular white inclusions; light red slip (2.5YR 6/6)

over the back of the animal. Similar figurines have been found, for example, in Ramla (Kletter 2005: Fig. 22:4, 5; Cytryn-Silverman 2010:117–118 with a discussion, Pl. 9.12:8; Shmueli 2016: Figs. 20; 24:2) and near Tel Lod (Haddad 2013: Fig. 10:22, 23). They are commonly dated to the eighth and ninth centuries CE.

IMPORTED GLAZED BOWLS, SGRAFFITO BOWL AND IMPORTED JAR (Fig. 24)

Cypriote Bowls (Fig. 24:1, 2).— Two high ring bases are made of a rather coarse ware; both are glazed on the interior over a white slip. The first (Fig. 24:1) is glazed greenish ochre and decorated with incised concentric circles. The second (Fig. 24:2) is glazed dark yellow and decorated with incised concentric circles. The bowls were imported from Cyprus, possibly from the Paphos region, and are dated to the thirteenth century CE (Stern 2012:60–65, Bowl Type CY.GL.3). Similar bowls from Yafo were published by Kletter (2004:203–204).

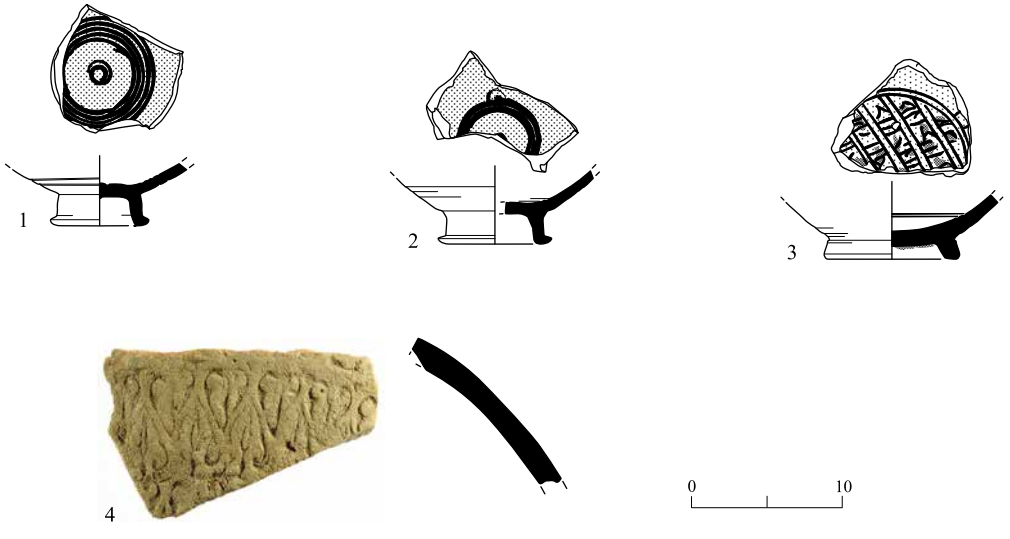

Fig. 24. Imported glazed bowls and jar.

No.	Vessel Type	Locus	Basket	Dimensions (cm)	Description
1	Bowl	163	1062	Base. diam. 6	Pink to reddish yellow ware (7.5YR 7/4–7/6) with few small angular white and black inclusions; mottled green/yellow glaze
2	Bowl	766	7195/1	Base. diam. 6.7 Base 100%	Red ware (2.5YR 5/8); white slip and greenish-ochre glaze
3	Bowl	897	80260	Base. diam. 7.3 Base 50%	Red ware (2.5YR 5/8); white slip and dark yellow glaze
4	Jar	897	80260/1		Brown ware (7.5YR 5/4) brown with many small white inclusions; reddish brown surface (5YR 5/4)

Glazed Bowl with Sgraffito Decoration (Fig. 24:3).— This bowl has a low ring base and an interior first covered with a white slip and then glazed with a pale yellow glaze with splashes of green. The sgraffito decoration consists of lines forming an intelligible geometric pattern. It seems to be related to fourteenth–fifteenth century CE bowls discussed by Avissar and Stern (2005:16, Fig. 6:1–4).

Imported Jar (Fig. 24:4).— This fragment, featuring an impressed heart decoration, probably belonged to a large jar. Jars of this type were produced in Spain and North Africa, and exported between the eleventh and thirteenth centuries CE (see Stern 2012:89–91).

References

Altun A. 1996. *Çanakkale Seramikleri (Çanakkale Ceramics)* (Suna & İnan Kıraç Kolleksiyonu Akdeniz Medeniyetleri Araştırma Enstitüsü). Istanbul.

Amitai-Preiss N. and Vincenz A. de. 2017. The IDF House in the Old City, Jerusalem: An Inscribed Pipe. *HA-ESI* 128. https://www.hadashot-esi.org.il/images//Bet_Zahal-pipe.pdf (accessed January 26, 2021).

Anthemion. http://lh6.ggpht.com/_FVuhrz8ZXkI/TQtP8W1l3WI/AAAAAAAABZc/YmvD89LU-4A/s1600-h/anthemion_10161_lg4.gif (accessed January 27, 2021).

Antique Bottles: Shaw: E.P. Shaw & Co Ltd Ginger Beer. https://www.antique-bottles.net/showthread.php?528784-E-P-Shaw-Co-Ltd-Ginger-beer (accessed January 27, 2021).

Armstrong P. and Günsenin N. 1995. Glazed Pottery Production at Ganos. *Anatolia Antiqua* 3:179–201.

Asiatic Pheasants: Pattern History. http://www.asiaticpheasants.co.uk/newpatthist.html (accessed October 6, 2017).

Asiatic Pheasants: Pottery Marks. http://www.asiaticpheasants.co.uk/newpatthist.html (accessed January 27, 2021).

Avissar M. 1996a. The Clay Tobacco Pipes. In A. Ben-Tor, M. Avissar and Y. Portugali. *Yoqne'am* I: *The Late Periods* (Qedem Reports 3). Jerusalem. Pp. 198–201.

Avissar M. 1996b. The Medieval Pottery. In A. Ben-Tor, M. Avissar and Y. Portugali. *Yoqne'am* I: *The Late Periods* (Qedem Reports 3). Jerusalem. Pp. 75–172.

Avissar M. and Stern E. 2005. *Pottery of the Crusader, Ayyubid and Mamluk Periods in Israel* (IAA Reports 26). Jerusalem.

Ayalon E. 2000. The "Roofscapes" of Eretz Israel. In G. Barkay and E. Schiller eds. *Landscapes of Israel, Azaria Alon's Jubilee Volume: Essays on Landscapes, Nature and Lore of Israel Presented to Azaria Alon*. Jerusalem. Pp. 126–131 (Hebrew).

Ayalon, E. 2002. Marseilles Roof Tiles and Their Imitations in Israel. In *Hidden Palaces: Wall and Ceilling Paintings in Ottoman Palestine (1856–1912)* (Exhibition Catalogue). Tel Aviv. Pp. 78–87, 94.

Bakirtzis D. 1980. Didymoteichon: Un centre de céramique post-byzantine. *Balkan Studies* 21:147–153.

Bakla E. 2007. *Tophane Lüleciliği: Osmanlı'nın tasarımdakı yaratıcılıği ve yaşam keyfi (Tophane Creativity of the Ottomans in Design and Joy of Life).* Istanbul (Turkish; English summary, pp. 361–369).

Başar F. and Tiryaki Y. 2000. *Turkish Art of Marbling*. Istanbul.

Blake H. 1981. Pottery Exported from Northwest Italy between 1450 and 1830: Savona, Albisola, Genoa, Pisa, and Montelupo. In G. Barker and R. Hodges eds. *Archaeology and Italian Society: Prehistoric, Roman and Medieval Studies* (BAR. Int. S. 102). Oxford. Pp. 99–124.

Blue and White Museum. Honeysuckle Spode. http://www.blueandwhite.com/museum2.asp?p=images/products/SPODE22444F.jpg&t=Spode%20-%20Honeysuckle%20brown%20-%20Muffin%20Dish%20c1855 (accessed January 27, 2021).

Blue and White Museum. Willow Pattern Bell. http://www.blueandwhite.com/museum2.asp?p=images/products/19CN20333F.jpg&t=Bell%20-%20Willow%20-%20Lunch%20Plate%20c1860 (accessed January 27, 2021).

Blue and White Museum. Willow Pattern Spode. http://www.blueandwhite.com/museum2.asp?p=images/products/WLPT27640F.jpg&t=Spode%20-%20Willow%20-%20Plate%20c1850 (accessed January 27, 2021).

Blue and White Museum. Willow Pattern Pountney. http://www.blueandwhite.com/museum2.asp?p=images/products/19CN30302F.jpg&t=Pountney%20-%20Willow%20-%20Dinner%20Plate%20c1825 (accessed January 27, 2021).

Boas A.J. 2000. Pottery and Small Finds from the Late Ottoman Village and the Early Zionist Settlement. In Y. Hirschfeld. *Ramat Hanadiv Excavations: Final Report of the 1984–1998 Seasons.* Jerusalem. Pp. 547–580.

Capelli C., Richez F., Vallauri L., Cabella R. and Di Febo R. 2012. L'épave du Grand Congloué 4: Caractérisation archéologique et archéométrique d'un lot de céramiques à tâches noires de Albisola-Savona. In *Navi, relitti e porti: Il commercio marittimo della ceramica medievale e postmedievale (Atti XLV convegno internazionale della ceramica, Savona, 25–26 maggio 2012).* Savona. Pp. 7–16.

Carswell J. 1972. *Kütahya Tiles and Pottery from the Armenian Cathedral of St. James, Jerusalem.* Oxford.

Carter R.A. 2011. *Ceramics of the Qatar National Museum: A Report and Catalogue.* Oxford.

Christison R. 2014. *Report on Excavation of Cesspit, Mudgee Town Hall.* Lithgow NSW.

Çiftçi A. and Yergün U. 2010. Brick as a Construction Material in the Modernization Process of the Ottoman Architecture. *Advanced Materials Research* 133–134:107–112.

Collectors Weekly: Flow Blue China. https://www.collectorsweekly.com/china-and-dinnerware/flow-blue (accessed January 27, 2021).

Cytryn-Silverman K. 2010. The Ceramic Evidence. In O. Gutfeld. *Ramla: Final Report on the Excavations North of the White Mosque* (Qedem 51). Jerusalem. Pp. 97–211.

Davenport: Tureen. http://www.laurelleaffarm.com/item-pages/china-and-glassware/tureens/antique-1800s-vintage-Davenport-china-white-ironstone-tureen-or-covered-dish-Laurel-Leaf-Farm-item-no-u82850.htm (accessed January 27, 2021).

Dekkel A. 2008. The Ottoman Clay Pipes. In V. Tzaferis and S. Israeli. *Paneas* II: *Small Finds and Other Studies* (IAA Reports 38). Jerusalem. Pp. 113–164.

Doğer L. 2008. Izmir agorası kazılarından 17.–19. yüzyıl seramik buluntuları üzerine bazı gözlemler. *Sanat Tarihi Dergisi* 17/1:23–54.

Edelstein G. and Avissar M. 1997. A Sounding in Old Acre. *'Atiqot* 31:129–136.

Eldem E. 2018. Of Bricks and Tiles: The History of a Local Industry in the Area of Mürefte (Thrace). In E. Akçetın and S. Faroqhi eds. *Living the Good Life: Consumption in the Qing and Ottoman Empires of the Eighteenth Century.* Leiden–Boston. Pp. 433–473.

Faiences Histoire: VIII.5. Faïences fines. http://ogabathuler.free.fr/Francais/Histoire/faiencesfines.html (accessed January 27, 2021).

Faïencité 2001. *Fayenceries de Sarreguemines, Digoin et Vitry-le-François. Planches de catalogues, premier quart du XXe siècle.* Sarreguemines.

François V. 1994. La céramique à glaçure à Malia: Productions médiévales italiennes et productions ottomanes. *BCH* 118:375–387.

François V. 1995. Byzantine ou ottomane? Une céramique peinte à l'engobe découverte en Méditérranée orientale. *Anatolia Antiqua* 3:203–217.

François V. 2008. Jarres, terrailles, faïences et porcelaines européennes dans l'empire ottoman (XVIIIe–XIXe siècles). *Turcica* 40:81–120.

Gauvin H. and Becker J.-J. 2007. *Cent ans de faïences populaires peintes à Sarreguemines et à Digoin.* Sarreguemines.

Gibson S., Ibbs B. and Kloner A. 1991. The Sataf Project of Landscape Archaeology in the Judaean Hills: A Preliminary Report on Four Seasons of Survey and Excavation (1987–89). *Levant* 23:29–54.

Gordon G. 2006. Roofs Flying in the Wind: The Introduction of the Marseille Roof-Tile and the Brick Industry in Palestine in the Late 19th Century. *Zmanim* 96:58–67 (Hebrew).

Guz-Zilberstein B. 1995. The Typology of the Hellenistic Coarse Ware and Selected Loci of the Hellenistic and Roman Periods. In E. Stern. *Excavations at Dor, Final Report IB: Areas A and C: The Finds* (Qedem Reports 2). Jerusalem. Pp. 289–433.

Haddad E. 2013. Remains of a Public Building from the Byzantine Period and a Farmhouse from the Early Islamic Period North of Tel Lod. *'Atiqot* 76:23*–39* (Hebrew; English summary, pp. 219–220).

Haddad E. and Glick A. This volume. The Yafo (Jaffa) Harbor: The Course of the Walls during the Crusader and Ottoman Periods and Remains of a Wharf from the Days of the British Mandate.

Haddad E. and Rauchberger L. 2019. A Crusader-Period Moat and Other Remains from Yafo (Jaffa), Yehuda Ha-Yammit Street. *'Atiqot* 95:19*–42* (Hebrew; English summary, pp. 257–259.

Hayes J.W. 1967. North Syrian Mortaria. *Hesperia* 36:337–347.

Hayes J.W. 1972. *Late Roman Pottery*. London.

Hayes J.W. 1980. Turkish Clay Pipes: A Provisional Typology. In P. Davey ed. *The Archaeology of the Clay Pipe* IV (BAR Int. S. 62). Oxford. Pp. 3–10.

Hayes J.W. 1992. *Excavations at Saraçhane in Istanbul* 2: *The Pottery*. Princeton.

Herrmann G. and Herrmann G. 1895. *Les carnets des Georges Herrmann père et fils* 1. Sarreguemines.

Herrmann G. and Herrmann G. 1905. *Les carnets des Georges Herrmann père et fils* 2. Sarreguemines.

Herrmann G. and Herrmann G. 1900–1923. *Les carnets des Georges Herrmann père et fils* 3. Sarreguemines.

InfoFaience: Bordeaux. Histoire. https://www.infofaience.com/fr/histoire/bordeaux-hist (accessed January 27, 2021).

Israel Y. 2006. *The Black Gaza Ware from the Ottoman Period*. Ph.D. diss. Ben-Gurion University of the Negev. Be'er Sheva' (Hebrew; English summary, pp. IV–XII).

Johnson B.L. 2008a. *Ashkelon* 2: *Imported Pottery of the Roman and Late Roman Periods.* Winona Lake.

Johnson B.L. 2008b. The Pottery. In J. Patric. *Archaeological Excavations at Caesearea Maritima. Areas KK, CC and NN; Final Reports* I: *The Objects*. Jerusalem. Pp. 13–206.

Kahanov Y., Cvikel D. and Wielinski A. 2012. Dor C Shipwreck, Dor Lagoon, Israel. Evidence for Maritime Connections between France and the Holy Land at the End of the XIXth Century: Building Materials and Ceramics from Marseilles, Vallauris and the Vicinity. *Cahiers d'archéologie subaquatique* 19:173–212.

Kletter R. 2005. Early Islamic Remains at 'Opher Park, Ramla. *'Atiqot* 49:57–99.

Kocabaş H. 1963. Tophane Pipe Making. *Türk etnografya dergisi* V, 1962:12–13.

Kontogiannis N.D. 2015. Marbled Ware in Ottoman Greece: Pottery That Doesn't Like Itself, or Pre-industrial Kitsch? In J. Vroom ed. *Medieval and Post-Medieval Ceramics in the Eastern Mediterranean: Fact and Fiction (Proceedings of the First International Conference on Byzantine and Ottoman Archaeology, Amsterdam, 21–23 October 2011)* (Medieval and Post-Medieval Mediterranean Archaeology Series I). Turnhout. Pp. 173–198.

Kowalsky A.A. and Kowalsky D.E. 1999. *Encyclopedia of Marks on American, English, and European Earthenware, Ironstone and Stoneware, 1780–1980.* Atglen, Pa.

Liaros N. 2018. Late Ottoman Tableware from Didymoteicho and Some Notes on Pots' Form, Function and Identity. In F. Yenişerhirlioğlu ed. *XIth Congress AIECM3 on Medieval and Modern Period Mediterranean Ceramics Proceedings, 19–24 October 2015, Ankara 1* (Antalya 19–24 October 2015). Ankara. Pp. 203–216.

Magness J. 1993. *Jerusalem Ceramic Chronology: Circa 200–800 CE* (*JSOT*/ASOR Monograph Series 9). Sheffield.

Mook M.S. and Coulson W.D.E. 1995. East Greek and Other Imported Pottery. In E. Stern ed. *Excavations at Dor, Final Report I, B: Areas A and C. The Finds* (Qedem Reports 2) Jerusalem. Pp. 93–125.

Moore Valeri A. 2005. La ceramica marmorizzata in Toscana '(1550–1650)'. *Azulejos: Rivista di studi ceramici. Produzione, consumo, commercio in età postclassica* 2:187–196.

Moore Valeri A. 2012. Marbleized Pottery in Tuscany (1550–1650). *Medieval Ceramics* 33:10–28.

Oleson J.P., Fitzgerald M.A., Sherwood A.N. and Sidebotham S.E. 1994. *The Harbours of Caesarea Maritima; Results of the Ancient Harbour Excavation Project 1980–1985* II: *The Finds and the Ship* (BAR Int. S. 594). Oxford.

Pasinli A. and Balaman S. 1991. *Turkish Tiles and Ceramics. Çinili Köşk.* Istanbul.

Petrucci J.F. 1999. *Les poteries et les potiers de Vallauris, 1501–1945* II. Ph.D. diss. École des hautes études en science sociales. Paris.

Petrus Regout: Filet Décor. https://geheugen.delpher.nl/en/geheugen/view/decor--petrus-regoutsphinx?coll=ngvn&maxperpage=36&page=1&query=Petrus+Regout+Decor+96&identifier=SHCL01%3A00799 (accessed January 27, 2021).

Petrus Regout: Décor 63 3bis. https://geheugen.delpher.nl/en/geheugen/view?coll=ngvn&identifier=SHCL01%3A00006 (accessed January 27, 2021).

*Petrus Regout: Décor 145 blauw 3bi*s. https://geheugen.delpher.nl/en/geheugen/view?coll=ngvn&identifier=SHCL01%3A00019 (accessed January 27, 2021).

Rauchberger L. 2017. Ottoman Clay Tobacco Pipes from the Seawall Excavations in Jaffa. In A.A. Burke, K. Strange-Burke and M. Peilstöcker eds. *The History and Archaeology of Jaffa* 2 (The Jaffa Cultural Heritage Project Series 2; Monumenta archaeologica 41). Los Angeles. Pp. 249–269.

Robinson R.C.W. 1985. Tobacco Pipes of Corinth and of the Athenian Agora. *Hesperia* 54:149–203.

Rogers C. 2004. *The Illustrated Encyclopedia of British Willow Ware*. Atglen, Pa.

Röntgen R.E. 1996. *The Book of Meissen* (2nd ed.). Atglen, Pa.

Rosen S.A. and Goodfriend G.A. 1993. An Early Date for Gaza Ware from the Northern Negev. *PEQ* 125:143–148.

Royal Albert: Cup Shapes. http://www.royalalbertpatterns.com/reference%20pages/Cup%20Shapes.htm (accessed January 27, 2021).

Royal Derby: Cup Shapes. https://peter-jones-is3w.squarespace.com/shapes (accessed January 27, 2021).

Savage G. and Newman H. 2000. *An Illustrated Dictionary of Ceramics.* London.

Shapiro A. 2016. Ottoman Clay Tobacco Pipes and Nargile Heads from the Flour Mills in the Ridwan Gardens, ʻAkko. *ʻAtiqot* 87:97–102.

Shmueli O. 2016. An Early Islamic-Period Structure on Danny Mass Street, Ramla. *ʻAtiqot* 86:99*–126* (Hebrew; English summary, pp. 118–119).

Simpson St.J. 2000. The Clay Pipes. In P.R. Harper and D. Pringle. *Belmont Castle: The Excavation of a Crusader Stronghold in the Kingdom of Jerusalem.* Oxford. Pp. 147–171.

Simpson St.J. 2002. Ottoman Pipes from Zirʼin (Tell Jezreel). *Levant* 34:159–172.

Society for Historical Archaeology: Beer & Ale Bottles. https://sha.org/bottle/beer.htm (accessed January 27, 2021).

Stern E. 2000. *Dor, Ruler of the Seas: Twelve Years of Excavations at the Israelite-Phoenician Harbor Town on the Carmel Coast.* Jerusalem.

Stern E.J. 2012. *ʻAkko* I: *The 1991–1998 Excavations; The Crusader-Period Pottery* (IAA Reports 51) (2 vols.). Jerusalem.

Strange-Burke K. 2011. Islamic and Crusader Pottery from Jaffa: A Collection of Whole and Reconstructed Vessels. In M. Peilstöcker and A.A. Burke eds. *The History and Archaeology of Jaffa* 1 (The Jaffa Cultural Heritage Project Series 1; Monumenta archaeologica 26). Los Angeles. Pp. 197–209.

Stern E.J, Toueg R. and Shapiro A. 2019. Mamluk and Early Ottoman Pottery from Ramla: Defining Local and Imported Fabrics. *ʻAtiqot* 96:129–170.

Tekkök B. 2011. Remnants of Çanakkale Glazed Ware Production: A Long Tradition of Glazing in the Troad Region. *NEA* 74:226–235.

Tsuf O. 2018. *Ancient Jaffa from the Persian to the Byzantine Period: Kaplan Excavations (1955–1981)* (Jaffa Cultural Heritage Project Series 3; Ägypten und Altes Testament 89). Münster.

Vallerin M. 1994. *Pelves* estampillés de Bassit. *Syria* 71:171–204.

Vincenz A. de. 2011. Ottoman Clay Tobacco Pipes from Ramla. *'Atiqot* 67:43*–53*.

Vincenz A. de. 2017. Ottoman Pottery and Glass Bracelets from Yafo (Jaffa), Jerusalem Boulevard and Its Vicinity. *'Atiqot* 88:115–129.

Vincenz A. de. 2019a. The Ceramic Assemblage from Kefar Gabirol, el-Qubeibe. *'Atiqot* 96:171–198.

Vincenz A. de. 2019b. The Late Ottoman-Period Pottery from Kafr 'Ana, Or Yehuda. *'Atiqot* 95:219–227.

Vincenz A. de. 2020a. Ceramic and Porcelain Vessels of the Ottoman Period from the French School on Yefet Street, Yafo (Jaffa). *'Atiqot* 100:497–512.

Vincenz A. de. 2020b. Ottoman-Period Ceramic Artifacts from the Magen Avraham Compound, Yafo (Jaffa). *'Atiqot* 100:293–347.

Vincenz A. de. 2020c. Pottery of the Ottoman Period: An Introduction. *'Atiqot* 100:13–15.

Vincenz A. de. 2021a. Didymoteicho or not Didymoteicho? That is the Question. Investigating the Provenance of Imported Slip Painted Vessels in Ottoman Palestine. In P. Petridis, A.G. Yangaki, N. Liaros and E.-E. Bia eds. *Proceedings of the 12th Congress AIECM3 on Medieval and Modern Period Mediterranean Ceramics, 21–27 October, Athens*. Athens. Pp. 729–736.

Vincenz A. de. 2021b. Porcelain and Ceramic Vessels of the Ottoman Period. In Y. Arbel ed. *Excavations at the Ottoman Military Compound (Qishle) in Jaffa, 2007, 2009* (The Jaffa Cultural Heritage Project Series 4; Ägypten und Altes Testament 91). Münster. Pp. 127–304.

Vincenz A. de. Forthcoming (a). Ceramics and Porcelain Vessels from the Excavations at the Greek Market in Yafo (Jaffa).

Vincenz A. de. Forthcoming (b). Porcelain and Ceramic Vessels from the Excavation on Ha–Ẓorfim Street, Yafo (Jaffa).

Vincenz A. de and Sion O. 2007. Two Pottery Assemblages from Khirbat el-Ni'ana. *'Atiqot* 57:21–52.

Vroom J. 2003. *After Antiquity: Ceramics and Society in the Aegean from the 7th to the 20th Century A.C., A Case Study from Boeotia, Central Greece* (Archaeological Studies Leiden University 10). Leiden.

Weinberg G.D. 1988. *Excavations at Jalame: Site of a Glass Factory in Late Roman Palestine*. Columbia, Mo.

Yildiz Factory: History.https://www.millisaraylar.gov.tr/fabrikalar/yidiz-cini-fabrika-i-humayunu (accessed February 11, 2020).