'Atiqot 112, 2023

The Kamon Cave Survey: A Refuge Cave from the Time of the Wars of the Diadochi

Eitan Klein, Amir Ganor, Nir Distelfeld, Boaz Langford, Micka Ullman, Roi Porat and Amos Frumkin[1]

The archaeological survey of the Kamon cave revealed several groups of finds, including a hoard of coins and jewelry; a cache comprising a lamp with agate beads inside it; several pottery vessels and an arrowhead found together in a rock crevice; and scattered pottery and metal artifacts. Based on the finds, it was concluded that the major period of human activity in the cave was at the beginning of the Hellenistic period, with meager activity during Iron Age IIA. The cave probably served as a refuge for a group of people during the Wars of the Diadochi. This article discusses the social background of the refugees and the circumstances leading to the deposition of the hoard.

Keywords: Galilee, Wars of the Diadochi, hoard, cache, numismatics, jewelry, weapon

Introduction

Kamon Cave is a karst cave (total length 225 m) at an altitude of 378 m asl, on the Kamon Ridge in Western Galilee (map ref. 230684/757696). It is located in the center of an elongated dome-shaped topographic feature, part of a shoulder that descends northwest from the ridge, near the top of a local watershed extending between Naḥal Shezor and Naḥal Ẓuf. The slope descending from the hilltop verges on the Bet Ha-Kerem Valley, which in antiquity was traversed by an important thoroughfare linking inland Galilee with the coast. The cave was formed in dolomite limestone of Cenomanian Age Sakhnin Formation (see Bogoch and Sneh 2008), within the phreatic zone of bedrock (i.e., beneath the water table).

Two cavers who visited Kamon Cave at the beginning of March 2015, reported to the Israel Antiquities Authority the discovery of an ancient hoard of coins, pieces of jewelry and a stone seal in one of the cave's interior chambers. Following this discovery, a comprehensive archaeological survey of the cave was conducted on behalf of the Israel

[1] Dr. Eitan Klein, Amir Ganor and Nir Distelfeld, Israel Antiquities Authority; Boaz Langford, Micka Ullman, Roi Porat and Prof. Amos Frumkin, The Hebrew University of Jerusalem.

Antiquities Authority, in cooperation with the Israel Cave Research Center at the Hebrew University of Jerusalem (Klein et al. 2017).[2]

During the archaeological survey of the cave, the artifacts retrieved included a hoard of coins and jewelry; a cache comprising a lamp containing several agate beads; several pottery vessels and an arrowhead found together within a hard-to-reach rock crevice; and finds scattered on the cave's floor. Analysis of the finds revealed that the main period of human activity in the cave was at the beginning of the Hellenistic period, with meager activity during Iron Age IIA. It is suggested that the cave served as a refuge for a group of people who fled from the fighting in the region during the Wars of the Diadochi. The social background of the refugees and the circumstances leading to the deposition of the hoard are hereby discussed.

The Cave (Plan 1)

The cave's entrance opens into a small sinkhole (doline), partly filled with rocks and boulders. A low opening at the bottom of this entrance shaft leads west toward two small chambers (A, B; Plan 1: Section 1–1), through a sub-vertical shaft with an elliptical profile and smooth walls. The narrow and low-ceilinged chamber then slopes north, accessing a large, round central chamber (c. 18 × 21 m, 4 m high) that is divided into several sub-chambers (C–E) by piles of collapsed rocks, steep inclines of the cave floor and rock pillars. The floor of the central chamber was covered with a dark muddy sediment, strewn with many boulders and rock debris (Fig. 1), and occasional artifacts (Fig. 2). A few chambers (F–H) to the northeast of the main chamber were accessed through short vertical shafts connecting one chamber to the other; access into this series of chambers was exceedingly difficult, and they did not yield any archaeological finds.

Archaeological finds, including many fragments of Galilean Coarse Ware (GCW) jars (Fig. 3), were documented throughout the entire central chamber, attesting that this part of the cave was the main area of human activity. A large, elevated platform (4 × 5 m), built from local fieldstones, was clearly observed in a side view of Chamber C, where part of a steep topographic step in the cave floor, near its western wall, was infilled by the builders (Fig. 4). It seems that the platform was built over large accumulations of collapsed rocks to form a leveled area suitable for human habitation. The bases of three large jars were exposed adjacent to the platform (B1050–1052; Figs. 5, 6; see Plan 1). The location of the jar bases, below active speleothems, suggests that they may have been used for water collection.

---

[2] The survey of the cave (Permit No. A-7367) was directed by Eitan Klein (field photography) on behalf of the Israel Antiquities Authority. Thanks are due to the cavers, Reuven and Chen Zakai, whose discovery and diligent reporting of the hoard of coins and jewelry prompted the survey. Thanks are also extended to Nir Distelfeld, Ira Horowitz, Amir Ganor, Gidon Goldenberg, Ronit Lupu, Yinon Shivtiel and Moran Plitvinski (surveyors), Matan Avital and the late Ahikam Amichay (mapping), Raisa Vinitsky and Naama Sukenik (textiles), Yosef Bukengolts (pottery restoration), Irena Lidsky-Reznikov and Carmen Hersch (artifact drawing), Clara Amit (studio photography) and Andrew Meadows and Donald T. Ariel (numismatic consultation).

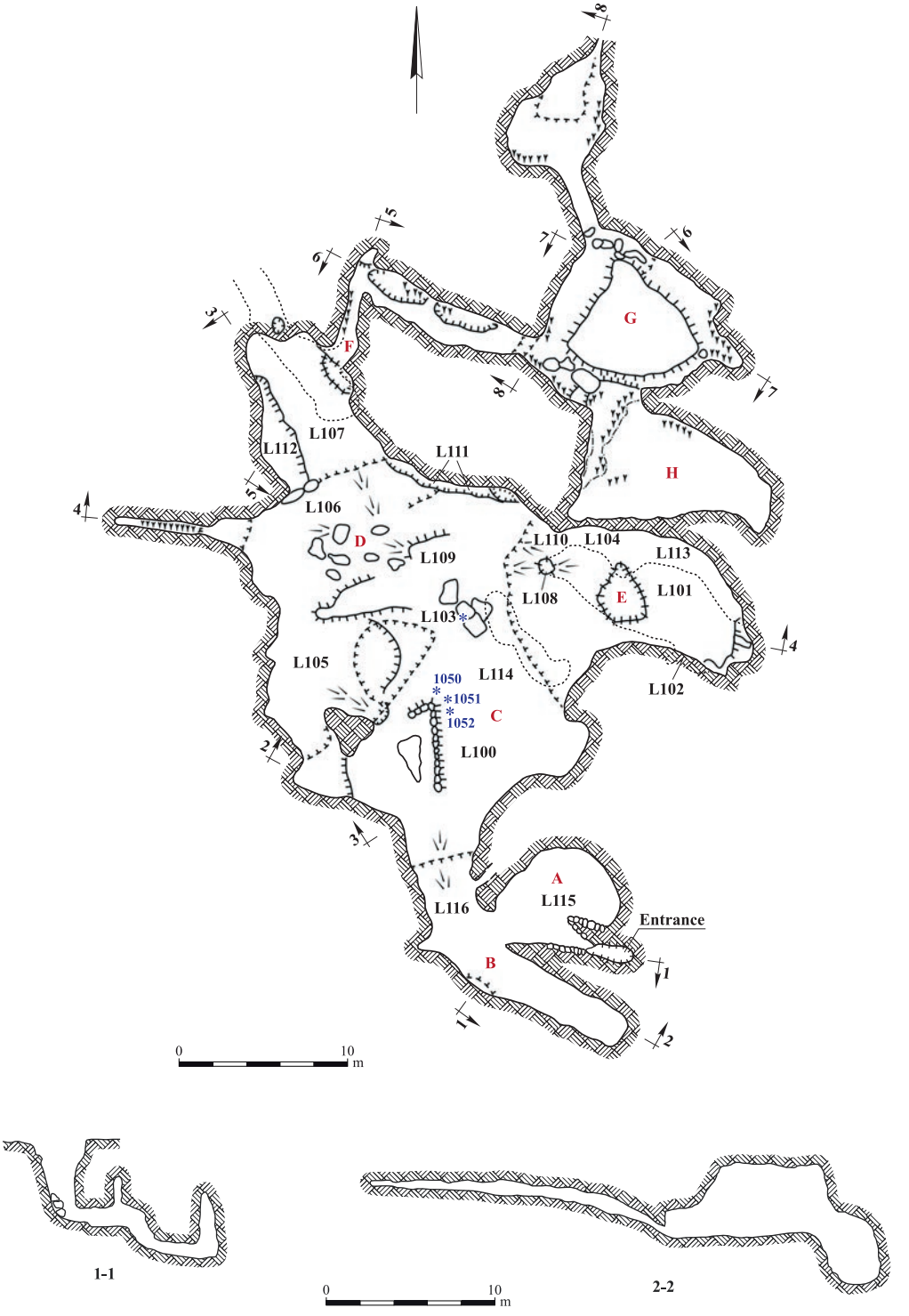

Plan 1. The cave, plan and sections.

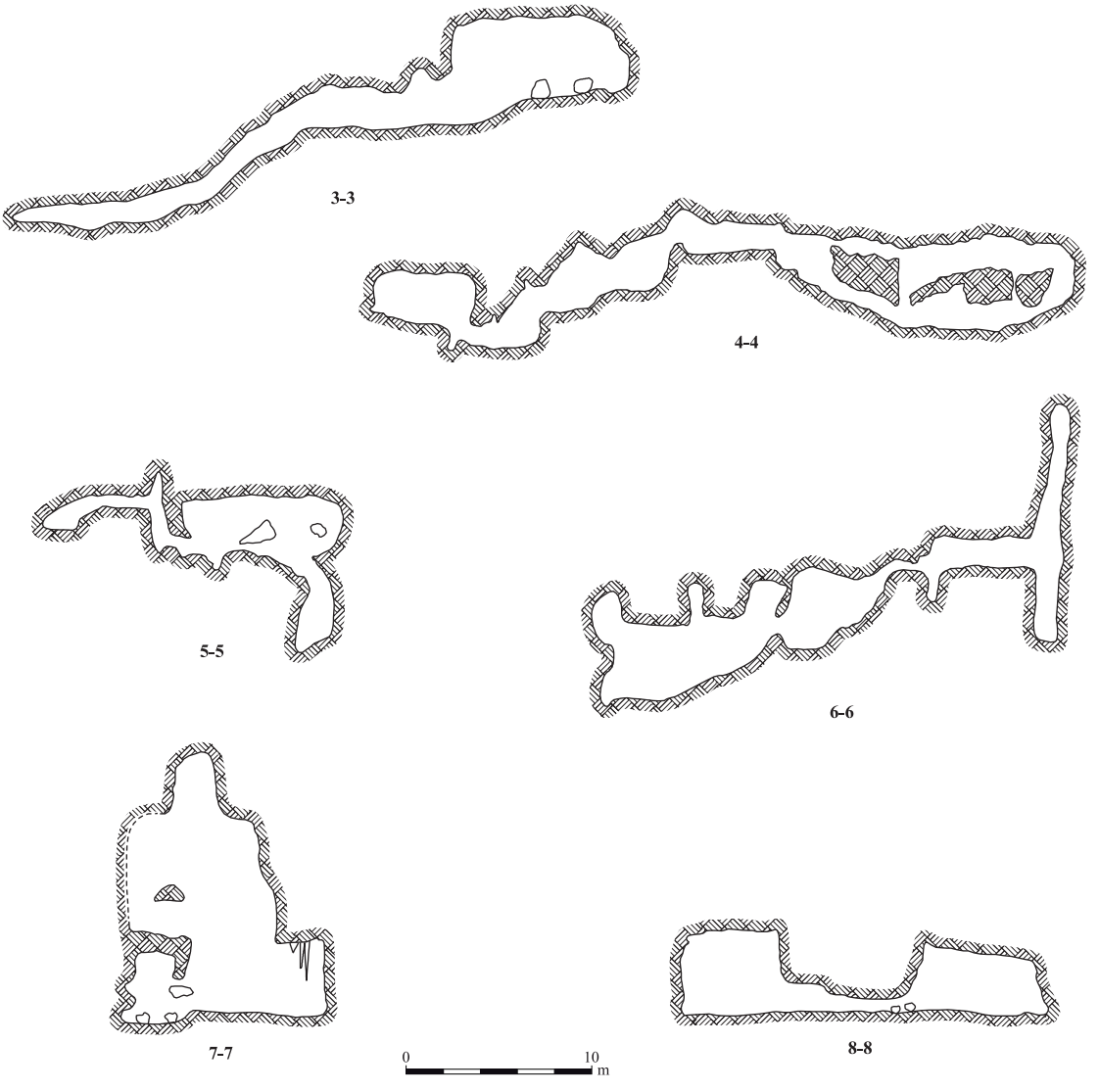

Plan 1. (cont.).

The coin and jewelry hoard lay on a rock inside a shelf-like crevice within the southern wall of Chamber E (L102). Various artifacts, including sherds of Iron IIA cooking pots (tenth–ninth centuries BCE), a silver earring and a needle (see below), were found scattered among collapsed boulders throughout Chamber D. Also found was a small assortment of artifacts uncovered in an elongated and a very difficult-to-access space that extended below the bottom of the east side of Chamber C (L103). This small collection comprised an amphoriskos, typical of the end of the Persian and the early Hellenistic periods (Fig. 7), a clay oil lamp, a cooking pot and a leaf-shaped arrowhead (Fig. 8; see below). These finds may have been deposited in the crevice as part of some unknown use of this part of the cave, or they may have reached the crevice unintentionally.

Fig. 1. The built platform in Chamber C, looking northwest.

Fig. 2. Galilean Coarse Ware (GCW) storage-jar fragments welded together by cave sediments, looking east.

Fig. 3. Two GCW storage-jar fragments in Chamber C.

Fig. 4. Side view of the built platform in Chamber C, looking southeast.

Fig. 5. The bases of large jars east of the built platform in Chamber C (marked by red arrows), looking west.

Fig. 6. A jar base placed in between rocks in Chamber C.

Fig. 7. An amphoriskos from L103 (see Fig. 15:11).

Fig. 8. A leaf-shaped arrowhead from L103 (see Fig. 16:3).

Fig. 9. Hellenistic oil lamp with eight black-and-white agate beads from L104 (see Figs. 15:15; 16:3).

An apparently deliberately deposited cache was found deep within a crevice in the northern wall of Chamber E (L104), comprising a Hellenistic-period oil lamp containing eight black-and-white agate beads (Fig. 9).

The Jewelry and Coin Hoard (L102)

The Jewelry (Figs. 10; 13)

The hoard found in Chamber E included ten silver jewelry items, all common types of the late Persian period, the fifth and fourth centuries BCE. The closest parallels for these pieces are known from burial caves of this period in Kamid el-Loz, Lebanon (Poppa 1978).

Fig. 10. The jewelry and coin hoard from L102.

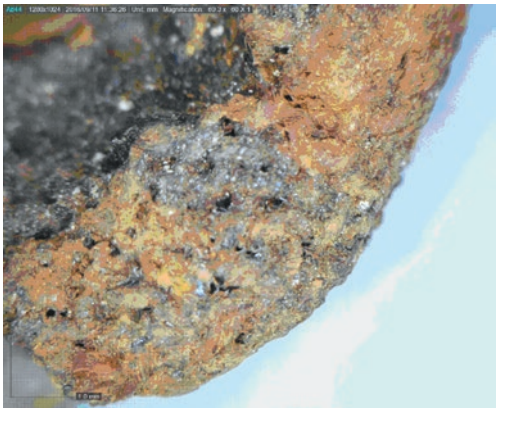

Fig. 11. Wool fabric adhering to one of the bracelets from the jewelry hoard (L102).

Fig. 12. A piece of fabric from warp-and-woof wool found with the jewelry hoard (L102).

Fabric strands of warp-and-woof wool were observed adhering to the jewelry (Figs. 11, 12), indicating that the hoard was originally placed inside a bundle of textile that did not survive.

Earrings.— Five earrings of two different types were part of the hoard. One type is represented by two identical penannular earrings, each comprising 12 spheres and two hemispheres alternating with 15 granule ringlets (Fig. 13:1). Two cover plates with four

hinge hoops and one fastening arc with two small hoops were placed at each end. Musche (1992:265, Pl. CIII:2.2) catalogued such earrings as Achaemenid Type 2. According to Rudolph (1995:87, 90, Nos. 18, 19), gold earrings of this type were produced in the fifth and fourth centuries BCE, at the time of the Achaemenid Empire in western Anatolia, probably in Lydia. Two gold earrings of this type were found in Sardis (Curtis 1925:30–31).

The second earring type is represented by three ovate, boat-shaped items, decorated with a silver-trail wounded sting, granulations and flower-like appliqués (Fig. 13:2, 3). This type was very popular in the Levant and further east from the sixth to the fourth century BCE (Kraay and Moorey 1968:196). Musche (1992:266, Pl. CIII:3.2, 3.3) catalogued such earrings as Achaemenid Type 3. Close parallels for this type from the Persian period are known from Graves 1, 14 and 22 at Kamid el-Loz (Poppa 1978: Tafs. 3:15, 17; 11:1; 14:15, 16), Tel Mikhal (Muhly and Muhly 1989:283, Fig. 25.10:196) and Khirbat Yama Burial Cave 1 (Gal and Muqari 2002: Fig. 9:6, 12–14).

Bracelets.— Two types of bracelets were found in the hoard. The first type is represented by two, nearly identical open-cuff bracelets (Fig. 13:6). Each end of the bracelet bears a schematic lion head with open jaws; the mane is represented by intersecting incisions and the ears, by a triangular incision. This type of bracelet with zoomorphic terminals was very common and widely distributed during the Persian period. Parallels from the fifth and fourth centuries BCE are known from Deve Hüyük in north Syria (Moorey 1980:74–79, Figs. 11, 12) and Tel Mikhal (Muhly and Muhly 1989:285–288, Fig. 25.12:233–239). Similar bracelets are also known from a context dated to 280 BCE at Tall-I Takht near Pasargadae,

Fig. 13 ▸

No.	Locus	Basket	Description
1	102	1001/1–2	Silver penannular earring comprising 12 spheres and two hemispheres, with 15 granule ringlets placed in between the spheres
2	102	1000/1	Silver ovate boat-shaped earring, decorated with a silver-trail wounded sting, granulations and flower-like appliqués
3	102	1000/2–3	Silver earring
4	106	1011	Silver ovate boat-shaped earring, decorated with silver-trail wounded sting, granulations and flower-like appliques
5	103	1074	Silver plain earing
6	102	1005/1–2	Silver bracelet
7	102	1005/3–4	Silver bracelet; hoop made from a twisted bangle with plain terminals
8	102	1005/5	Silver ring; plain hoop with incision lines at each terminal
9	102	1006	Silver ring; a hoop with double spiral terminals soldered on the underside of a circular bezel; the bezel is decorated with concentrically arranged dots
10	102	1004	Silver ring fit over a broken seal; the hook is plain, with three horizontal incised lines with pressed points
11	100	1012/1	Bronze seal ring; schematic winged lion(?) on bezel
12	100	1012	Bronze plain ring

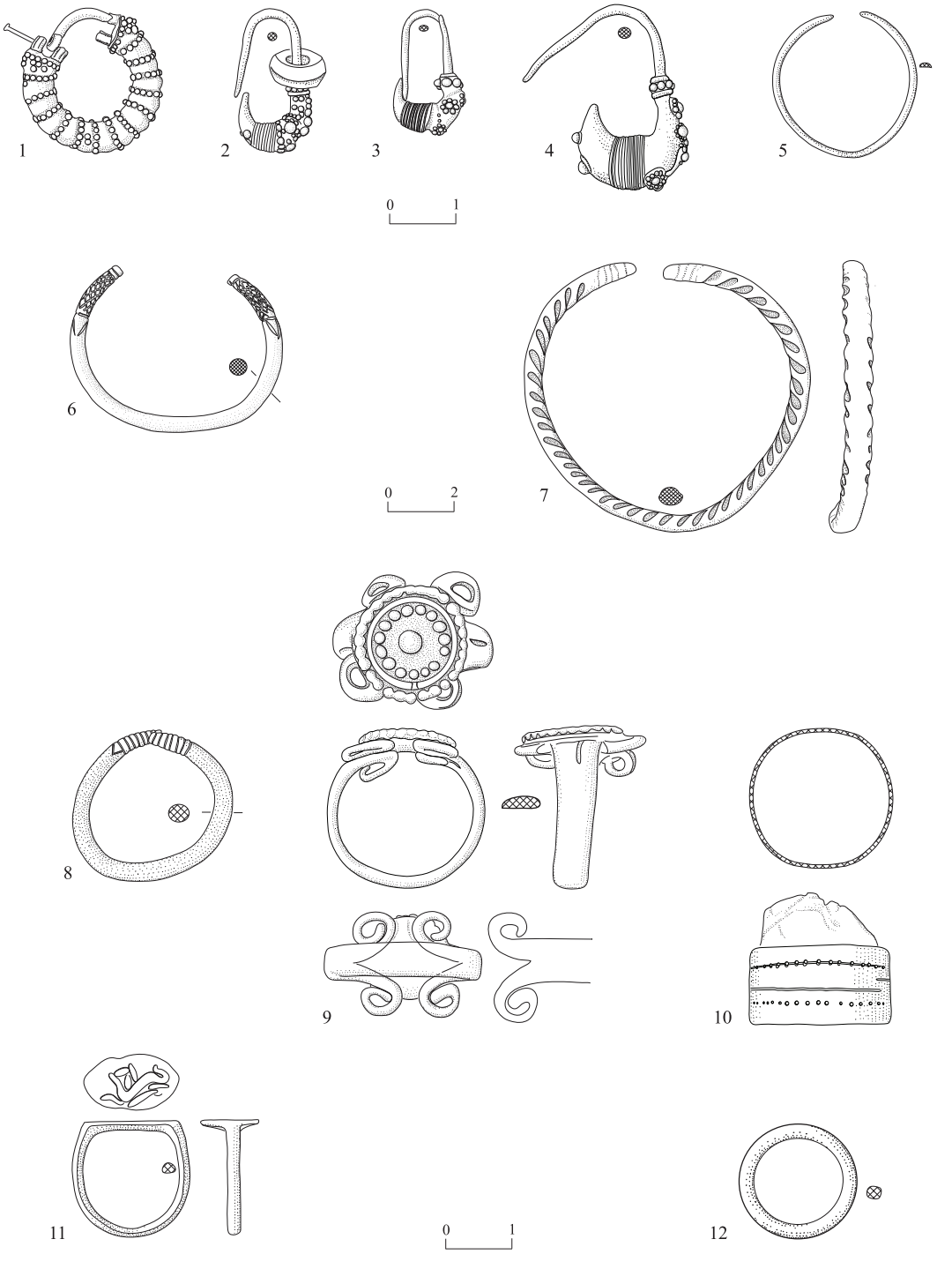

Fig. 13. Jewelry from the hoard (L102) and from Chamber C (L100).

Iran (Stronach 1978:178, 210, Fig. 90:1, 2), Kamid el-Loz (Poppa 1978: Taf. 18:2) and Gezer Tomb 103, dating from the late Persian–early Hellenistic period (Macalister 1912: Pl. XCVII:22).

The second bracelet type is represented by two open-cuff items with a hoop made from a twisted bangle and plain terminals (Fig. 13:7). A parallel for this item is known from Gezer Tomb 103 (Macalister 1912: Pl. XCV:13).

Rings.— Three silver rings formed part of the hoard. One ring has a plain hoop with incised lines at each terminal (Fig. 13:8). Parallels for this type are known from Tel Mikhal, where they are dated to the Persian period (Muhly and Muhly 1989:286, 214–215). Another ring has a hoop with double-spiral terminals, soldered on the underside of a circular bezel, which is decorated with a circle of dots (Fig. 13:9). A parallel for this ring, dated to the fifth or fourth centuries BCE, is known from Tel Mikhal (Muhly and Muhly 1989:283–284, Fig. 25.10:176); the hoops of this parallel are smaller than in the present example, and the bezel is decorated with granulations rather than dots. Other parallels come from Persian-period graves at ʻAtlit (Johns 1933:54, Fig. 11) and Kamid el-Loz (Poppa 1978:79–80, Taf. 8:16). The third ring-type has a plain hook with three horizontal incised lines of pressed dots (Fig. 13:10); the ring had been fit over a broken and worn stone seal (see below). A parallel for this ring is known from Gezer Tomb 103, dating to the late Persian–early Hellenistic period (Macalister 1912: Pl. XCV:16).

The Coins

Two silver *tetradrachmas* formed part of the hoard. The earlier of the two coins (No. 1) was minted at Sardis in 319–315 BCE (Price 1991:334, No. 2664). There is some dispute regarding the precise minting date of the later of the two *tetradrachmas* (No. 2): Price (1991:476, No. 3746) suggested that this coin type was minted in Babylon in 311–305 BCE, while Waggoner (1968:184–189, Type VIII, Series 4) believed that it was minted in 311/310–309/308 BCE, in the wake of Seleucus I Nicator's reconquest of Babylon. As this coin, the latest of the three coins found in the cave (for the third coin, see below), was struck not before 311 BCE, it is possible that the hoard was concealed at that time, when the cave was in use (see also Klein and Meadows 2017).

1. L102, B1003, IAA 161145.
Sardis, 319–315 BCE.
Obv.: Beardless head of Heracles r. wearing lion skin; border of dots.
Rev.: Zeus seated on stool-throne l. holding eagle in outstretched right hand and scepter in left; on l. mint marks; on r. downward: ΑΛΕΞΑΝΔΡΟΥ; border of dots.
ƦR, 17.13 g, 24 × 26 mm, axis 12.
Price 1991:334, No. 26642.

2. L102, B1002, IAA 161146.
Babylon, 311–305 BCE.
Obv.: Zeus seated on stool-throne l. holding eagle in outstretched right hand and scepter in left; on l. mint mark of a monogram inside a wreath; inside throne ΜΙ; below throne ΒΑΣΙΛΕΩ[Σ]; on r. downward: ΑΛΕΞΑΝΔΡΟ[Υ]; border of dots.
Rev.: Beardless head of Heracles r. wearing lion skin; border of dots.
ÆR, 17.14 g, 26 × 27 mm, axis 6.
Price 1991:476, No. 3746.

Conical Stone Seal
A conical seal made of a reddish-brown stone, with a 4 mm hole drilled from both sides, was also part of the hoard (Figs. 10; 16:1). The surface of the seal is worn and therefore, the stamp design is unrecognizable. Persian-period parallels for this item are known from Kamid el-Loz Graves 8 and 11 (Poppa 1978: Tafs. 8:5; 10:4).

Other Finds

This section presents all the other finds from the cave that were not part of the hoard, including the cache of beads within the oil lamp (L104) and the group of finds found in the rock crevice (L103). The artifacts are presented typologically according to their material.

Pottery
Most of the ceramic vessels found during the survey of the cave are common types dating from the end of the Persian and the beginning of the Hellenistic periods in Galilee. Most of the assemblage was retrieved from Chambers C and D; a cooking pot, an amphoriskos and an oil lamp were retrieved from L103; and one oil lamp containing the cache of agate beads, was found in L104.

Jars (Fig. 14).— More than 100 storage jar fragments were documented in Chambers C and D, constituting the most common pottery type in the cave, presumably used as containers for food and liquids. They were found mostly around the built platform in Chamber C.

The storage-jars belong to three types. Nearly all the sherds belong to GCW storage jars, a well-known type of the Persian and Hellenistic periods throughout Galilee. These are rough, handmade vessels, with a pinkish-orange fabric containing large white grits. The jar necks reveal variability in size and form, comprising examples of medium and small sizes, and mostly straight or inward-sloping forms; some of the necks are wheel-made. The rims are thickened and out-folded (Fig. 14:1–11), and the thickened base is flat or pointed (Fig. 14:14, 15); parallels for such bases are known from Khirbat esh-Shuhra (Aviam and Amitai 2002: Fig. 13:6, 7). GCW storage jars from the end of the Persian and beginning of the Hellenistic period are also known from Gush Ḥalav (Wolff 2009: Fig. 4:5), Qeren Naftali (Aviam 2004: Fig. 7.13; 2014: Fig. 11:4, 5) and other sites in Galilee (Frankel et al. 2001:61–62; Hartal 2005:263–264; Leibner 2009:22). Similar storage jars were found in association with a temple at Miẓpe Ha-Yammim, where they were understood as part of a pagan ritual and attributed to a coastal Phoenician influence during the Persian and Hellenistic periods (Berlin and Frankel 2012: Fig. 38). This interpretation was reinforced by the observation that many Galilean sites with GCW vessels were abandoned during or soon after the Hasmonaean conquest of Galilee (Frankel et al. 2001:109–110; Aviam and Amitai 2002:127).

The other two types of storage jars, each represented by one specimen are well-known types from the fifth and fourth centuries BCE, found throughout Galilee and the coastal plain. One of these jars has a short-ribbed neck and a short out-turned rim (Fig. 14:12). A parallel for this type is known from the Persian-period stratum at Gil‘am (Stern 1970:38, Fig. 9:16, nn. 41–43) and many other sites in central and northern Israel (Stern 2015:570). The other jar represents one of the most common types of Persian-period storage jars in Galilee and the coastal plain. This type has a wide mouth, a sharp carination between the short shoulder and the body, a very short neck and a short, everted rim (Fig. 14:13). Many jars of this type were found at Tel Dor (Stern 1995: Fig. 2.8) and other Persian-period sites (Stern 2015:571, Pl. 5.1.10:7, 8).

Mortarium (Fig. 15:1).— One mortarium was found at the entrance to Chamber A (L115). The mortarium has thick walls, a flat base and an everted rim. A parallel for this vessel comes from Tel Dor, where it was dated to the fifth–fourth centuries BCE (Stern 1995: Fig 2.2:5).

Cooking Pots (Fig. 15:2–7).— Three Iron IIA cooking pots were found in the survey, two in Chambers C and D and the other, in Chamber A, near the cave’s entrance; a fourth pot

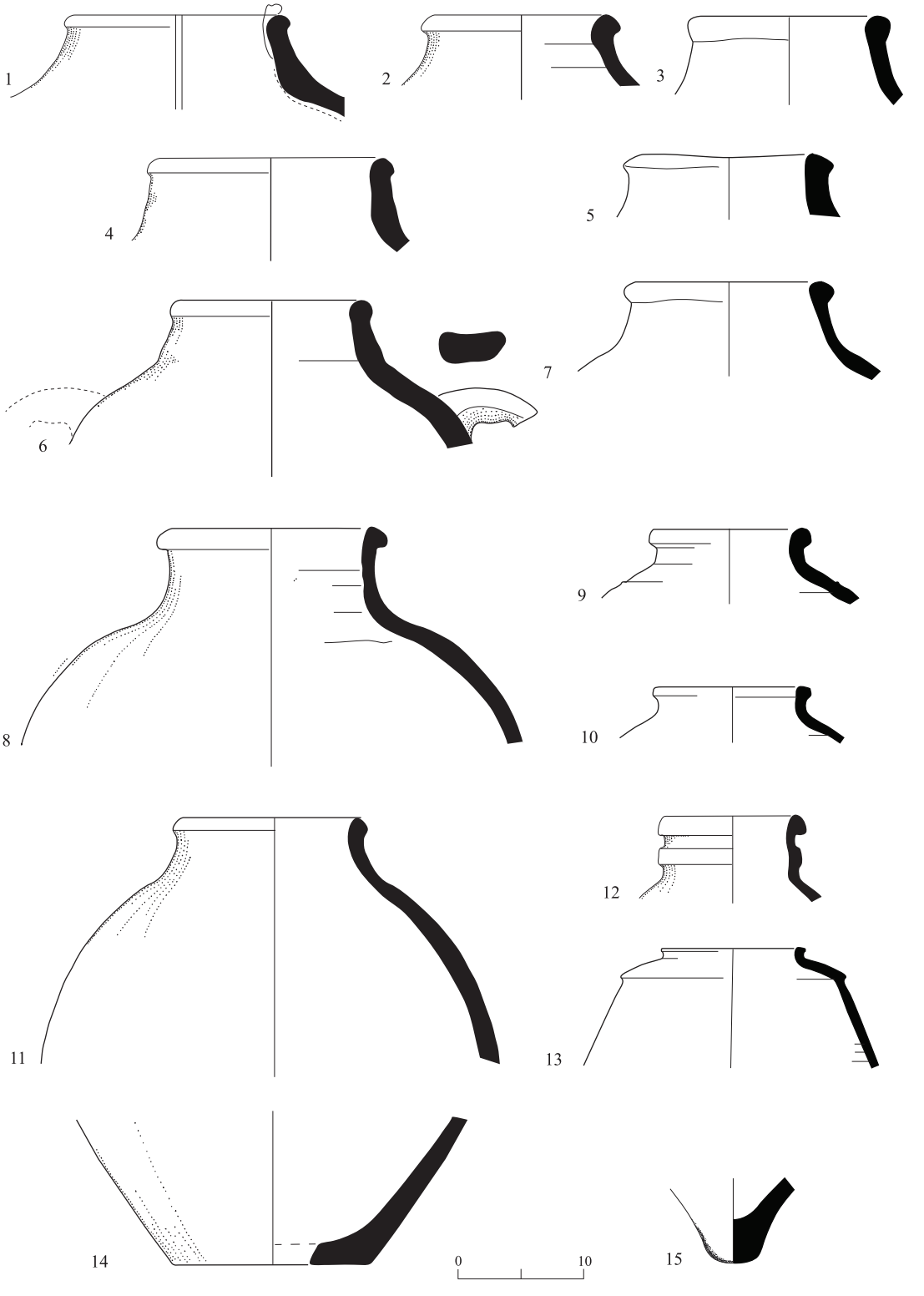

Fig. 14. Storage jars from Chambers C and D.

◂ **Fig. 14**

No.	Locus	Basket	Description
1	100	1019/6	GCW; bright brown coarse ware, gray core
2	105	1039/1	GCW; bright brown coarse ware, gray core; small white, red and black grits
3	100	1018	GCW; bright brown coarse ware, gray core
4	106	1036/2	GCW; bright brown coarse ware, gray core; small white grits
5	115	1055/1	GCW; bright brown coarse ware, gray core; small white grits
6	105	1028/1	GCW; bright brown coarse ware, gray core; small white grits
7	100	1019/5	GCW; bright brown coarse ware, gray core; small white grits
8	100	1019/1	GCW; bright brown coarse ware, gray core
9	100	1019/2	GCW; brown coarse ware, gray core; small white grits
10	105	1039/2	Dark brown ware; many small white grits
11	100	1018/2	GCW; bright brown coarse ware, gray core
12	110	1043/3	Gray ware; many medium-sized white and black grits
13	101	1048/1	Light gray ware; small white grits
14	105	1028	GCW; flat base; brown on ext., gray on int.; white grits
15	110	1043/8	Brown ware; pointed base; many large white grits

was found in a crevice, together with the small collection of pottery (L103).[3] Two cooking pots (Fig. 15:2, 3) have a wide mouth and a carination mid-body, and a triangular rim with an almost straight exterior surface. Their upper walls are straight or slightly tending inward. A parallel for these vessels is known from the tenth century BCE at Megiddo (Ben-Tor and Zarzecki-Peleg 2015:140, Pl. 2.2.7:1). Cooking pot No. 4 has a pinched rim with a concave exterior surface; it too was dated to the tenth century BCE based on a parallel from Ḥorbat Rosh Zayit (Ben-Tor and Zarzecki-Peleg 2015:140, Pl. 2.2.7:5).

Three Persian-period closed cooking pots of three different types were found in the survey (Fig. 15:5–7). The first type has a short neck and a triangular outward-folded rim (Fig. 15:5). Cooking pots of this type were dated to the late Persian period at Tel Dor (Stern 1995:55, 84, Fig. 2.31:2). The second type has a short thick neck and an out-folded rim (Fig. 15:6). A parallel for this cooking pot is known from the late fourth-century BCE storage depot at Naḥal Tut (Alexandre 2006:155, Fig. 48:6). The third cooking-pot type (Fig. 15:7) has a thin straight neck and a rim projecting both inward and outward; two handles are drawn from the rim to the shoulders. This cooking-pot type was dated to the late Persian period at Tel Dor (Stern 1995:69, 91, Fig. 2.37:7, 9), aligning with the date of the other two types of cooking pots found in Kamon Cave.

[3] No explanation can be offered for the presence of the Iron Age storage jar snd the three cooking pots together with Hellenistic-period vessels; they may be residual from an earlier occupation.

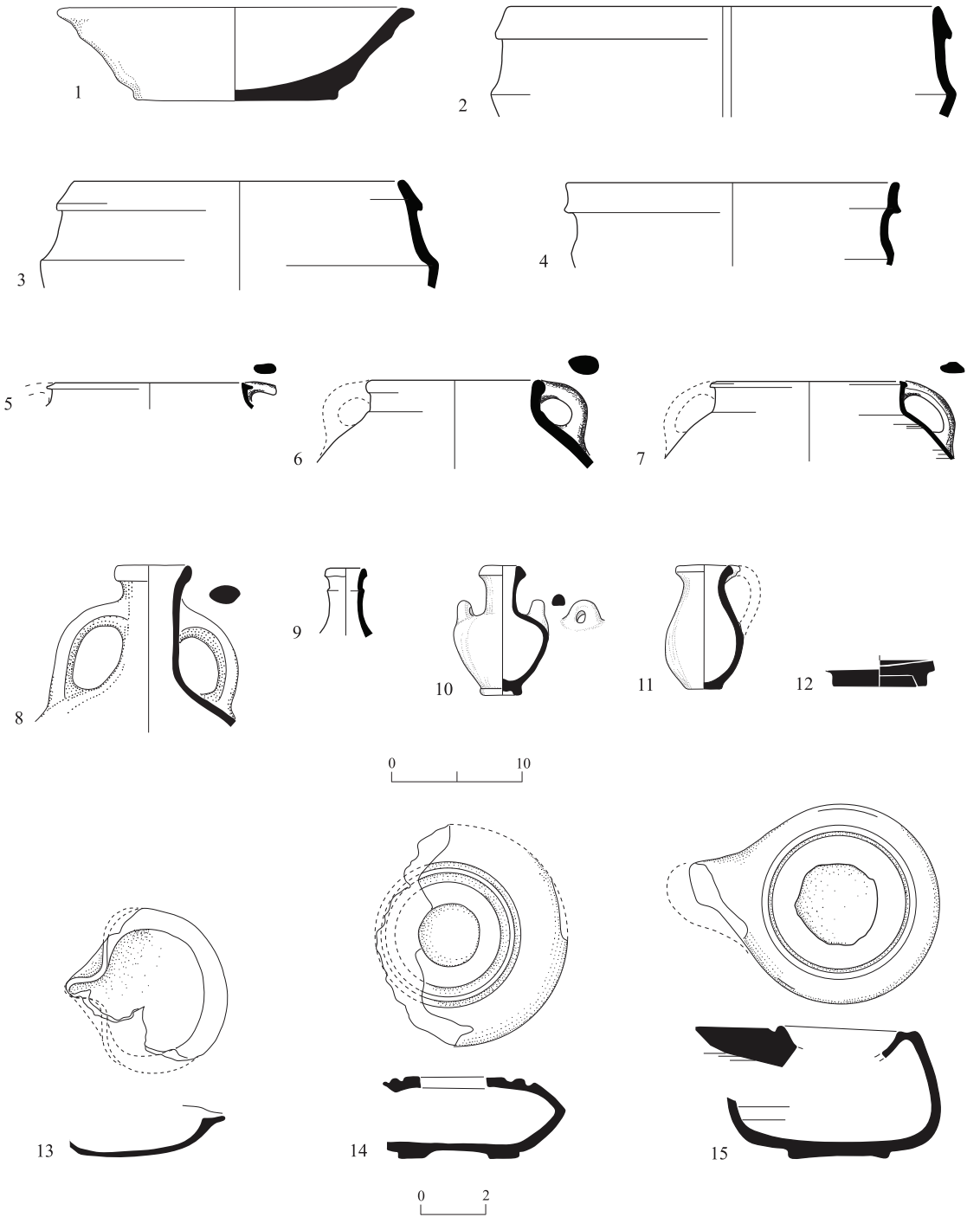

Fig. 15. Miscellaneous pottery finds from Kamon Cave.

◂ **Fig. 15**

No.	Vessel	Locus	Basket	Description
1	Mortarium	115	1055/1	Bright brown clay; large gray and white grits
2	Cooking pot	106	1036	Dark orange-black coarse ware; many small white grits
3	Cooking pot	103	1026	Dark orange-black coarse ware; many small white grits
4	Cooking pot	115	1059/1	Dark orange-black coarse ware; many small white grits
5	Cooking pot	100	1019/8	Reddish-orangey clay; small white grits
6	Cooking pot	110	1043/1	Dark orange-black coarse ware; many small white grits
7	Cooking pot	115	1057/2	Reddish-orangey ware; small white grits
8	Flask	106	1050	Reddish-orangey ware; gray core with small black grits
9	Juglet	100	1019	Bright brown ext. orange int.
10	Juglet	100	1060	Orange ware; white and red medium-sized grits; brownish-yellowish core
11	Amphoriskos	103	1015	Bright brown ware; small gray, white and red grits
12	Attic black bowl	110	1043	Uniform orangish ware; black-brown slip
13	Open oil lamp	103	1017	Coarse reddish-brownish ware; black-gray core; large white grits
14	Oil lamp	109	1030	Bbright brown ware; with traces of red slip on ext.; wheel made
15	Oil lamp	104	1010	Uniform bright brown ware; red slip on ext.

Flask (Fig. 15:8).— One flask was found in the cave, in the northern part of Chamber D. The flask has a long neck and a plain rim, folded upward and slightly outward. This flask type is well-known in the Persian period, e.g., at Tel Dor (Stern 1995:66, Pl. 2.12:3).

Juglets (Fig. 15:9, 10).— Two juglets were found in Chamber C. One (Fig. 15:9) has a projection in the upper third part of its neck and an out-folded rim. This type has been interpreted by Stern (1995:65–66, Fig. 2.11:5) as a perfume juglet and dated to the fifth–fourth centuries BCE. The second juglet has a disc base, a high thickened oval handle (well-suited for grasping) and an out-folded plain rim (Fig. 15:10). A similar juglet from the end of the Persian period was found in the temple at Miẓpe Ha-Yammim (Berlin and Frankel 2012: Fig. 27:6).

Amphoriskos (Fig. 15:11).— One amphoriskos, probably a local imitation of a Greek vessel type, was found inside the elongated cavity between Chambers C and E (L103). It has two upright basket handles, attached to the shoulders at a right angle, a long neck and an out-folded triangular rim. This type was dated to the fifth and fourth centuries BCE at Tel Dor (Stern 1995:66, Fig. 2.12:1).

Attic Black Bowl (Fig. 15:12).— This is the only imported vessel found in the survey. Only the base of the bowl was found, with a lustrous black glaze on the interior and exterior. A

parallel with a similar base is known from Tel Mikhal, where it was dated to 350–325 BCE (Kapitaikin 2006:45–46, Fig. 13:22; see also Marchese 1995:127–130).

Oil Lamps (Fig. 15:13–15).— Three oil lamps were found in the cave. One, found together with the small pottery collection in the cavity between Chambers C and E (L103), is a common Persian-period oil lamp with an open flat shape, a straight base, a flat wide rim and a sharply pinched wick hole (Fig. 15:13). Parallels for this type are known from many Persian-period sites in Israel, e.g., Tel Dor (Stern 1995: Fig. 2.14:2).

One lamp (Fig. 15:15; see Fig. 9), found in a crevice in the northern wall of Chamber E (L104), contained several agate beads (see below). It is a common local imitation of a wheel-made Attic lamp with round shoulders, vertical sides and a flat base; traces of red slip are visible on the body. This type of lamp is typically dated to the late Persian and the Hellenistic periods (Rosenthal-Heginbottom 1995:235, Fig. 5.14:5, 7). Another wheel-made lamp (Fig. 15:14) has no parallels known to the authors.

Stone Objects

The stone objects consist of a spindle whorl (Fig. 16:2) and a cache of eight agate beads (Fig. 16:3) found within an oil lamp.

Spindle Whorl (Fig. 16:2).— A hemispherical spindle whorl made of dark colored stone was found in a small natural cavity in the floor of Chamber E (L108). A similar spindle whorl dated to the Persian period was found in the City of David, Jerusalem (Peretz 2015:512, Fig. 14.2:7).

Bead (Fig. 16:3).— Eight such beads, made from black-and-white agate stone, were found inside the oil lamp from the upper crevice in the northern wall of Chamber E (L104). The

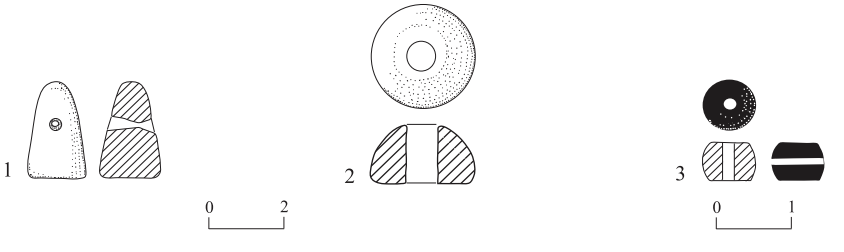

Fig. 16. Stone objects.

No.	Locus	Basket	Description
1	102	1008	Conical seal made of a reddish-brown stone
2	108	1024	Hemispherical spindle whorl made of dark stone
3	104	1009	Black-and-white agate bead

beads were probably threaded together on a string that did not survive, perhaps forming part of a necklace. A parallel for these beads, dated to the Persian period, is known from Khirbat Yama Cave 1 (Gal and Muqari 2002: Fig. 9:11).

Coin
3. L100, B1013, IAA 161144.
Miletus/Mylasa, 320 BCE.
Obv.: Helmet; left field corn-ear; right field K.
Rev.: Shield; border with dots.
Æ, 14 g, 3.21 mm.
Price 1991:275, No. 2072.

Jewelry
Two bronze rings and two silver earrings were found in the cave, not as part of the hoard.

Earrings (Fig. 13:4, 5).— Two silver earrings were found in addition to those comprising the hoard: one, from the elongated cavity berween Chambers C and E (L103) and the other, from Chamber D. One earring is plain (Fig. 13:5), with a parallel from Tel Mikhal dating to the Persian period (Shalev and Sari 2006: Fig. 8:3), and the other is ovate and boat-shaped, with a silver trail-wounded string, granulations and flower-like appliqués (Fig. 13:4), similar to earring Nos. 2 and 3 of the jewelry hoard (see above).

Rings (Fig. 13:11, 12).— Two bronze rings were retrieved from Chamber C (L100). One of them is a seal ring with a schematic stamp of a winged lion on the bezel (Fig. 13:11). This ring belongs to Type 1 of the group of finger rings in Boardman's typology (1970:212–213, Fig. 217:1). Three rings of this type found in Ḥorbat Tittora Burial Cave II were dated to the fifth–fourth centuries BCE (Brandl 2012). Another ring of the same type was found at Tel Mikhal, where it was dated to the Persian period (Muhly and Muhly 1989:283, Fig. 25.10:173), and in Persian-period Khirbat Yama Cave 1 (Gal and Muqari 2002: Fig. 9:5).

The second ring is plain (Fig. 13:12). A Persian-period parallel for this ring is known from Cave 1 at Khirbat Yama (Gal and Muqari 2002: Fig. 9:17).

Metal Objects
A few other metal objects were found in the cave, mainly as scattered finds in Chambers C and D; one arrowhead was found with pottery finds in the crevice (L103). More than the

other finds from the cave, these objects bear testimony to the kinds of activities that were carried out in the cave during its main period of use.

Bronze Fibulae (Fig. 17:1, 2).— Two bow fibulae with a ribbed body were found in Chamber C; one (Fig. 17:2) is missing the spring catch. Parallels from the Persian period are known, e.g., from Tel Mikhal (Muhly and Muhly 1989:288–289, Fig. 25.13:244, 249), ʻAtlit (Johns 1933:55, Fig. 13) and Deve Hüyük in north Syria (Moorey 1980:74–79, Figs. 11, 12). Parallels from the Hellenistic period are known, for example, from Mount Gerizim (Magen 2008:223, Fig. 305) and Khamid el-Loz (Poppa 1978: Tafs. 4:15, 16; 8:6; 9:9; 10:7; 12:1; 13:1; 19:1; 25:8, 13).

Iron Arrowhead (Figs. 8; 17:3).— A leaf-shaped tanged arrowhead was found in L103 together with the small pottery assemblage (see above). A parallel for this type is known from an early Hellenistic deposit at Samaria-Sebaste (Kenyon 1957:454–455, Fig. 111:6) and from Persian-period Kamid el-Loz Grave 61 (Poppa 1978: Taf. 19:2). The arrowhead—the only item of weaponry found in the cave—may hint to its use by refugees at a time of war, although it could also have been used for hunting.

Iron Nails (Fig. 17:4).— A few nails were found in Chamber C. They all have a square-sectioned shank and are of different lengths. A Persian-period parallel for these nails is known from Tel Mikhal (Shalev and Sari 2006: Fig. 3:1).

Bronze Needle (Fig. 17:5).— This needle has a curved upper part, indicating its use in weaving. A parallel for it is known from Gezer Tomb 103, where it was dated to the late Persian–early Hellenistic period (Macalister 1912: Pl. XCVII:15).

Bronze Axe (Fig. 17:6).— A broken axe was found near the built platform in Chamber C. Only the part extending from the edge to the eye survived, likely the long side of the axe. A parallel for this axe from the Hellenistic period is known from Mount Gerizim (Magen 2008:211–212, Fig. 299).

Iron pin (Fig. 17:7).— This pin, found in Chamber C, was probably used for piercing.

Bronze Bowl (Fig. 17:8).— This bowl, found in Chamber C, has seven holes in its sides, which may have been used for hanging it on a scale.

Discussion and Conclusions

The finds discovered in Kamon Cave indicate human activity during two periods: Iron Age IIA and the beginning of the Hellenistic period. The sporadic Iron IIA finds attest to a minimal use of the cave at this time; therefore, no further interpretation of the context of

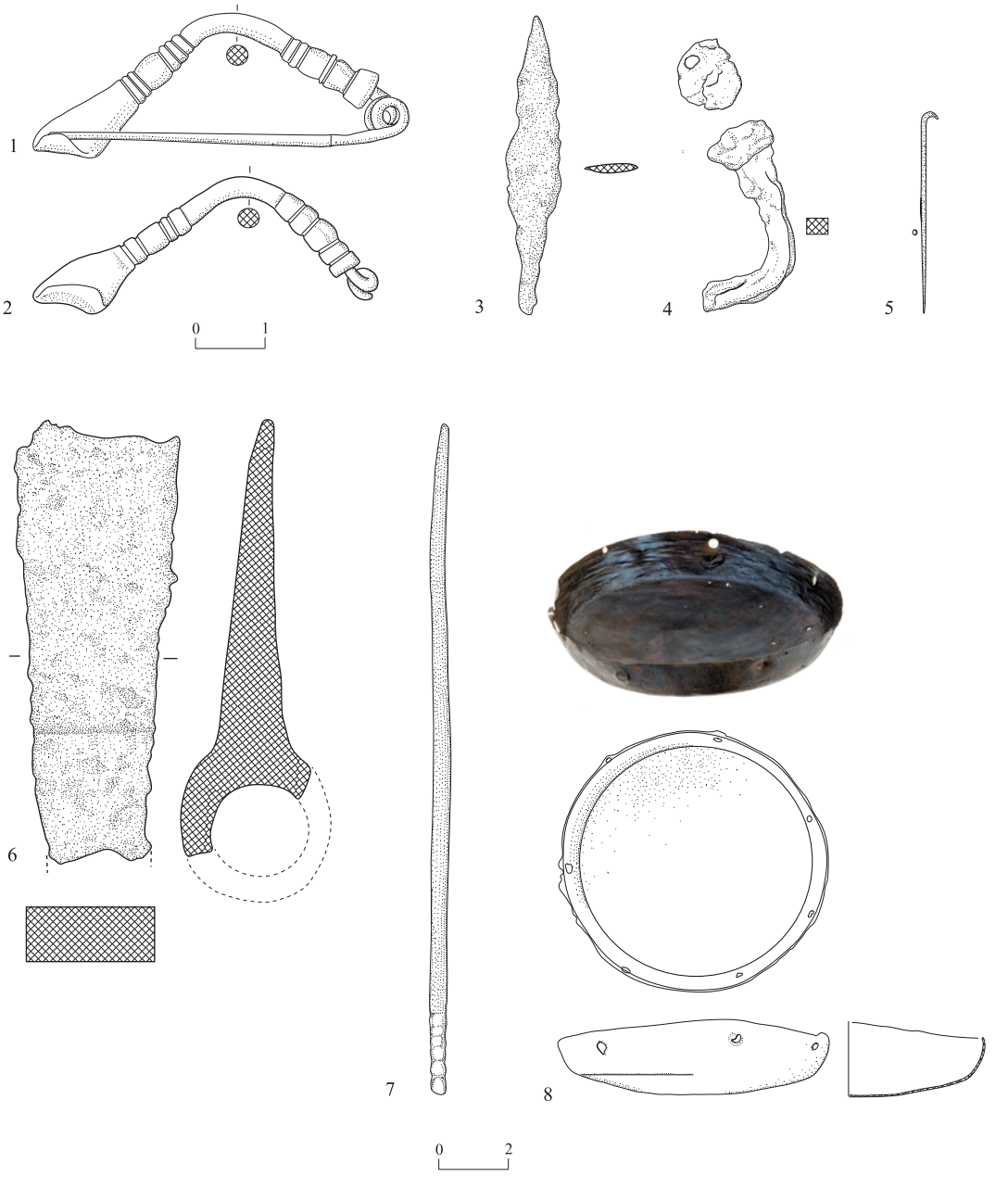

Fig. 17. Metal objects from the cave.

No.	Locus	Basket	Description
1	100	1023	Bronze; bow fibula with spring catch; ribbed bow
2	103	1046	Bronze; bow fibula; ribbed bow
3	103	1049	Iron; leaf-shaped tanged arrowhead
4	100	1014	Iron; nail with square-sectioned shank
5	106	1039	Iron needle
6	100	1016	Bronze axe
7	100	1025	Iron pin
8	100	1022	Bronze bowl

this occupation can be offered. Most of the ceramic finds from the later phase of occupation belong to types spanning the late Persian and early Hellenistic periods; however, the three coins from this period uncovered in the cave clearly indicate activity toward the end of the fourth century BCE, in the early Hellenistic period.

The abundant finds uncovered from the beginning of the Hellenistic period, especially the many GCW storage jars, were mainly found in the central part of the cave (Chambers C, D and E), which is relatively spacious and accessible. The physical conditions in these chambers were suitable for a lengthy period of human occupation, and these conditions were further improved by the erection of an extensive platform in Chamber C. While no potsherds were found on the platform, the lower parts of three jars placed near the platform seem to have been used for the collection and storage of water from active speleothem dripping.

It is apparent that considerable effort was invested in preparing the cave for human habitation. This is manifested by the many large GCW jars brought to the cave, which must have been appreciable, considering the narrow and low-ceilinged passages to be passed to reach the central halls from the cave entrance. The needle, spindle whorl, arrowhead and axe may reflect a wide range of subsistence activities in the cave, likely by both men and women.

The extensive use of GCW storage jars suggests that the cave inhabitants belonged to the autochthonous population who occupied the Galilee in the Hellenistic period. Possibly, these people originated from Ḥorbat Kamon, c. 2.5 km east of the cave, atop the Kamon Ridge. The possibility that a Persian–early Hellenistic settlement existed at that site was indicated by the find of a pottery mortarium (Hartal 2012:46–48, Fig. 16:2); however, several other nearby settlements from these periods are also known.

Taken together, the Hellenistic-period finds uncovered in Kamon Cave suggest its use by a group of refugees, possibly fleeing the ravages of war. The hoard of coins and jewelry, and the handful of agate beads within the oil lamp found in Chamber E, suggest that this relatively more difficult-to-access part of the cave was used for concealing valuables; both the hoard and the oil lamp were found within narrow spaces where they would have been hard to find.

The precise time that the cave was in use is proposed, based on the three coins uncovered in the cave. The minting dates of the two silver *tetradrachmas* found with the hoard, and that of the bronze coin found in Chamber C, are quite close in time, indicating that they were all deposited by the same people. This activity could not have taken place prior to 311 BCE, the probable earliest minting date of the latest of the three coins.

Several possibilities for the historical context in which this event transpired, between the year 311 BCE and the turn of the fourth century BCE, were considered by Klein and Meadows (2017). The various scenarios are all related to the war campaigns that took place across the Southern Levant at that time, namely, the conflicts between Alexander the Great's successors, known as the Wars of the Diadochi: (1) Seleucus' campaign to recapture Babylon, at about the same time that Ptolemy I was engaged in war over Phoenicia, and

perhaps more precisely the time of his retreat back to Egypt in the course of which the city of ʻAkko was destroyed—an event which is attested in archaeological excavations in and near the city (Dothan 1976; Kashtan 1988:46; Ovadiah and Mucznik 2018:588–589, and see further references therein); (2) Year 306 BCE, when, according to Diodorus (*Bibliotheca historica* XX, 73.2), Antigonus and his son Demetrius assembled a campaign against Ptolemy I in Egypt, advancing through the cities of Phoenicia and the coastal plain; (3) Year 301 BCE, when Ptolemy I regained control of Palestine and instituted a regional administrative reform (*Bibliotheca historica* XXI, 1.5)—it is, however, unclear whether an actual war broke out at this time.

Other evidence of the impact of war and political instability on the local population at the end of the fourth century BCE comes from a number of coin hoards dating to the last two decades of this century, found throughout the contry and surrounding areas, clearly attesting to the lack of stability in the region during the Wars of the Diadochi: (1) a hoard of 118 coins discovered in a burial at Tel Bet Yeraḥ, near the southern edge of the Sea of Galilee, dated to 319 BCE or a little later (Baramki 1944); (2) a hoard of 59 *tetradrachmas* and 4 *drachmas* discovered at Tel Ẓippor, about 18 km east of Ashqelon, dated to 317–311 BCE or later, with the latest coin minted at Ecbatana in 311–303 BCE (Rahmani 1966)—a similar *tetradrachma* type was found in Kamon Cave, probably attesting that the Tel Ẓippor hoard and the finds from the cave were deposited around the same time; (3) a hoard of five coins from Tel Mikhal (Kindler 1989:323), dated to 314/313 BCE, was associated with the withdrawal of Ptolemy I from the Phoenician coast to Egypt in 311 BCE (Ariel 2006:80); (a) a hoard found close to Jericho was dated to 305 BCE (Price 1990–1991).

Outside the country, several hoards dating to 311–310 BCE were discovered in Egypt, among them the ʻTreasure of Abu Ḥummus', found west of Alexandria (Thompson, Mørkholm and Kraay 1973:234–235). Also generally dated to this time span is a coin hoard found in Lebanon (*CH* VIII:24, No. 207). A coin hoard discovered in the Phoenician coastal town of Byblos, north of Beirut, contained coins of the Babylonian mint Type VIII, Series 4, together with a coin from the mint of ʻAkko dating to the years 309–308 BCE (Dunand 1939:409–412). This latest coin in the Byblos hoard indicates that it was concealed somewhat after 309/308 BCE (Bellinger 1950–1951).

In view of the coin evidence from the various hoards, and the historical record of the Wars of the Diadochi, it is most likely that Kamon Cave was used by refugees fleeing from regional conflict in 311 BCE, when war broke out along the Phoenician coast and adjacent Western Galilee, culminating in the destruction of ʻAkko by Ptolemy I. While it is unlikely that the refugees occupying the cave came from as far as ʻAkko, the cave's relative proximity to that city—a distance of 23 km—and the Phoenician coast in general, raises the possibility that the inhabitants of rural Galilee, perhaps belonging to the autochthonous population of this region, were induced to flee when ʻAkko came under attack.

The finds from Kamon Cave represent the first evidence uncovered to date from the Hellenistic period of the use of natural caves for taking refuge. This phenomenon is widely

known from Roman-period First Jewish Revolt and the Bar Kokhba Revolt in Jewish-populated Judea (Eshel and Amit 1998; Eshel and Porat 1999) and Eastern Galilee (Shivtiel and Osband 2018; Shivtiel 2019). Therefore, the exceptional finds from the cave constitute rare evidence of the political instability that prevailed in the country during the Wars of the Diadochi.

References

Alexandre Y. 2006. Naḥal Tut (Site VIII): A Fortified Storage Depot from the Late Fourth Century BCE. *ʻAtiqot* 52:131–189.

Ariel D.T. 2006. Coins from Tel Mikhal (Tel Michal). *ʻAtiqot* 52:71–88.

Aviam M. 2004. *Jews, Pagans and Christians in the Galilee: 25 Years of Archaeological Excavations and Surveys; Hellenistic to Byzantine Periods* (Land of Galilee 1). Rochester, N.Y.

Aviam M. 2014. The Fortress of Qeren Naftali. In M. Aviam ed. *"From Watch Tower to Fortified City": Forts and Fortresses in Northern Israel from the Canaanites to the IDF* (Land of Galilee 3). Ẓemaḥ. Pp. 101–111 (Hebrew).

Aviam M. and Amitai A. 2002. Excavations at Khirbet esh-Shuhara. In Z. Gal ed. *Eretz Zafon: Studies in Galilean Archaeology*. Jerusalem. Pp. 119–133 (Hebrew; English summary, p. 181*).

Baramki D.C. 1944. Coin Hoards from Palestine II: A Hoard of Silver Coins of Sidon and Alexander from Khirbet el-Karak. *QDAP* 11:86–90.

Bellinger A.R. 1950–1951. An Alexander Hoard from Byblos. *Berytus* 10:37–49.

Ben-Tor A. and Zarzecki-Peleg A. 2015. Iron Age IIA–B: Northern Valleys and Upper Galilee. In S. Gitin ed. *The Ancient Pottery of Israel and Its Neighbors from the Iron Age through the Hellenistic Period* 1. Jerusalem. Pp. 135–188.

Berlin A.M. and Frankel R. 2012. The Sanctuary at Mizpe Yammim: Phoenician Cult and Territory in the Upper Galilee during the Persian Period. *BASOR* 366:25–78.

Boardman J. 1970. *Greek Gems and Finger Rings: Early Bronze Age to Late Classical*. New York.

Bogoch R. and Sneh A. 2008. *Geological Map of Israel 1:50,000. Sheet 4-1 (Arbel) (Geological Surney of Israel).* Jerusalem.

Brandl B. 2012. Three Persian-Period Metallic Finger Rings from Burial Cave 2, South Ḥorbat Tittora. *ʻAtiqot* 72:33*–40*.

CH VIII: U. Wartenberg, M.J. Price and K.J. McGregor eds. *Coin Hoards* VIII: *Greek Hoards*. London 1994.

Curtis C.D. 1925. *Sardis* XIII: *Jewelry and Gold Work* I: *1910–1940*. Rome.

Diodorus of Sicily. *Bibliotheca historica* (R.M. Geer ed. and trans.; Loeb Classical Library). London–Cambridge, Mass. 1971.

Dothan M. 1976. The Fortifications of Ptolemais. *Qadmoniot* 34–35:71–74 (Hebrew).

Dunand M. 1939. *Fouilles de Byblos* I *(1926–1932): Texte*. Paris.

Eshel H. and Amit D. 1998. *Refuge Caves of the Bar Kokhba Revolt* I. Tel Aviv (Hebrew).

Eshel H. and Porat R. 2009. *Refuge Caves of the Bar Kokhba Revolt* II. Jerusalem (Hebrew).

Frankel R., Getzov N., Aviam M. and Degani A. 2001. *Settlement Dynamics and Regional Diversity in Ancient Upper Galilee: Archaeological Survey of Upper Galilee* (IAA Reports 14). Jerusalem.

Gal Z. and Muqari A. 2002. Excavations at Khirbet Yama (Yaḥem) in the Sharon Plain. In Z. Gal ed. *Eretz Zafon: Studies in the Galilean Archaeology*. Jerusalem. Pp. 91–106 (Hebrew; English summary, p. 180*).

Hartal M. 2005. *Land of the Ituraeans: Archaeology and History of Northern Golan in the Hellenistic, Roman and Byzantine Periods* (Golan Studies 2). Qaẓrin (Hebrew; English summary, pp. 1*–7*).

Hartal M. 2012. A Settlement from the Roman Period at Ḥorbat Kamon. *ʻAtiqot* 70:39–49 (Hebrew; English summary, p. 83*).

Johns C.N. 1933. Excavations at ʻAtlīt (1930–1): The South-Eastern Cemetery. *QDAP* 2:41–104.

Kapitaikin L.A. 2006. The Pottery from the IAA Excavations at Tel Mikhal (Tel Michal). *ʻAtiqot* 52:21–56.

Kashtan N. 1988. Akko-Ptolemais: A Maritime Metropolis in Hellenistic and Early Roman Times, 332 BCE–70 CE, as Seen through the Literary Sources. In I. Malkin, and R.L. Hohlfelder eds. *Mediterranean Cities: Historical Perspectives.* London. Pp. 37–53.

Kenyon K.M. 1957. Miscellaneous Objects in Metal, Bone and Stone. In J.W. Crowfoot, G.M. Crowfoot and K.M. Kenyon. *Samaria-Sebaste* III: *The Objects from Samaria*. London. Pp. 439–468.

Kindler A. 1989. Numismatic Report. In Z. Herzog, G. Rapp Jr. and O. Negbi eds. *Excavations at Tel Michal, Israel* (Tel Aviv University Institute of Archaeology Monograph Series 8). Minneapolis–Tel Aviv. Pp. 320–332.

Klein E., Langford B., Ullman M., Porat R. and Frumkin A. 2017. Kamon Cave. *HA–ESI* 129 (December 6). http://www.hadashot-esi.org.il/report_detail_eng.aspx?id=25332&mag_id=125 (accessed May 12, 2021).

Klein E. and Meadows A.R. 2017. A Hoard from the Wars of the Diadochi in the Kamun Cave, Western Galilee. *INR* 12:23–33.

Kraay C.M. and Moorey P.R.S. 1968. Two Fifth Century Hoards from the Near East. *RN* 10:181–235.

Leibner U. 2009. *Settlement and History in Hellenistic, Roman and Byzantine Galilee: An Archaeological Survey of the Eastern Galilee* (Texts and Studies in Ancient Judaism 127). Tübingen.

Macalister R.A.S. 1912. *The Excavation of Gezer, 1902–1905 and 1907–1909* I–III. London.

Magen Y. 2008. *Mount Gerizim Excavations* II: *A Temple City* (JSP 8). Jerusalem.

Marchese R. 1995. Athenian Imports in the Persian Period. In E. Stern ed. *Excavations at Dor; Final Report* I, B: *Areas A and C. The Finds* (Qedem Reports 2). Jerusalem. Pp. 127–181.

Moorey P.R.S. 1980. *Cemeteries of the First Millennium B.C. at Deve Hüyük, near Carchemish, Salvaged by T.E. Lawrence and C.L. Wooley in 1913* (BAR Int. S. 87). Oxford.

Muhly J.D. and Muhly P. 1989. Metal Artifacts. In Z. Herzog, G. Rapp and O. Negbi eds. Excavations at Tel Michal, Israel (Tel Aviv University Institute of Archaeology Monograph Series 8). Minneapolis–Tel Aviv. Pp. 267–295.

Musche B. 1992. *Vorderasiatischer Schmuck von den Anfängen bis zur Zeit der Acaemeniden (ca. 10,000–330 v. Chr.).* Leiden–New York–Copenhagen–Cologne.

Ovadiah A. and Mucznik S. 2018. *Miscellanea: Studies in Art History and Archaeology from Classical Antiquity to Late Antiquity*. Tel Aviv.

Peretz R. 2015. Loomweights and Spindle Whorls. In E. Mazar. *The Summit of the City of David Excavations 2005–2008. Final Reports* I: *Area G*. Jerusalem. Pp. 511–517.

Poppa R. 1978. *Kamid el-Loz* 2: *Der eisenzeitliche Friedhof, Befunde und Funde* (Saarbrücker Beiträge zur Altertumskunde 18). Bonn.

Price M.J. 1990–1991. A Hoard of Tetradrachms from Jericho. *INJ* 11:24–25.

Price M.J. 1991. *The Coinage in the Name of Alexander the Great and Philip Arrhidaeus: A British Museum Catalogue* (2 vols.). Zurich–London.

Rahmani L.Y. 1966. A Hoard of Alexander Coins from Tel Tsippor. *Schweizer Münzblätter* 64:129–145.

Rosenthal-Heginbottom R. 1995. Imported Hellenistic and Roman Pottery. In E. Stern ed. *Excavations at Dor; Final Report* I, B: *Areas A and C. The Finds* (Qedem Reports 2). Jerusalem. Pp. 183–288.

Rudolph W. 1995. *A Golden Legacy: Ancient Jewelry from the Burton Y. Berry Collection at the Indiana University Art Museum.* Bloomington, Ind.

Shalev S. and Sari K. 2006. Persian-Period Metal Finds from Tel Mikhal (Tel Michal). *'Atiqot* 52:93–107.

Shivtiel Y. 2019. *Cliff Shelters and Hiding Complexes: The Jewish Defense Methods in Galilee during the Roman Period; The Speleological and Archaeological Evidence* (Novum Testamentum et orbis antiquus. Series archaeologica 6). Göttingen.

Shivtiel Y. and Osband M. 2018. The Meiron Valley Cave Survey and the Use of Karstic Caves for Refuge in the Roman Period. In A. Tavger and Z. Amar eds. *In the Highland's Depth* 8:27*–43*.

Stern E. 1970. Excavations at Gil'am (Kh. er-Rujm). *'Atiqot* (*HS*) 6:31–54 (English summary, pp. 4*–6*).

Stern E. 1995. Local Pottery of the Persian Period. In E. Stern ed. *Excavations at Dor; Final Report* I, B: *Areas A and C; The Finds* (Qedem Reports 2). Jerusalem. Pp. 51–92.

Stern E. 2015. Persian Period. In S. Gitin ed. *The Ancient Pottery of Israel and Its Neighbors from the Iron Age through the Hellenistic Period* 2. Jerusalem. Pp. 565–617.

Stronach D. 1978. *Pasargadae: A Report on the Excavations Conducted by the British Institute of Persian Studies from 1961 to 1963.* Oxford.

Thompson M., Mørkholm O. and Kraay C.M. eds. 1973. *An Inventory of Greek Coin Hoards.* New York.

Waggoner N.M. 1968. *The Alexander Mint at Babylon*. Ph.D. diss. Columbia University. Ann Arbor.

Wolff S.R. 2009. A Sounding near the Summit of Gush Ḥalav. *'Atiqot* 61:41–50.