'Atiqot 112, 2023

Early Islamic-Period Pottery from Building 900 in the Southern Tyropoeon Valley

Benjamin J. Dolinka[1]

A small but significant pottery assemblage dating from the Early Islamic period was retrieved from Building 900 excavated in the Tyropoeon Valley. The assemblage includes vessels typical of the Umayyad period, the early eighth century CE, and the Abbasid period, the ninth century CE. The latest diagnostic sherds date from the mid- to late tenth century CE. This Early Islamic pottery assemblage provides important insights into the occupation history of the area immediately south of present-day Old City of Jerusalem

Keywords: City of David, Early Islamic period, pottery

Introduction

Fieldwork conducted in the City of David (see Szanton and Uziel, this volume), yielded a small but significant corpus of ceramics dating from the Early Islamic period in Phase I of Building 900.[2] The pottery examined here originated from four sealed contexts: Floor 108 (Fig. 1:1–4); the dismantling of W2 (L110; Fig. 1:5, 6); collapsed debris (L111; Fig. 1:7–12); and Floor 207 (Fig. 2). The corpus presented here consists of bowls, basins, a cooking

[1] Dr. Benjamin J. Dolinka, independent scholar.

[2] I would like to sincerely thank Peretz Reuven (The Hebrew University of Jerusalem) for providing me with his manuscript on the Early Islamic pottery from the Giv'ati Parking Lot excavations, including the illustrations, prior to the publication of the second volume of the Giv'ati Parking Lot excavations, at the time that the ceramic analysis and initial writing of this report were done, in January 2016. His important typological and chronological analysis, published in 2020, provides a landmark study that will no doubt serve as the basis for all future research on the Umayyad and Abbasid ceramic repertoire of Jerusalem and its surrounding hinterland. Many thanks are also due to Doron Ben-Ami (IAA and The Hebrew University) and Yana Tchekhanovets (IAA and Ben Gurion University), directors of the Giv'ati Parking Lot excavations, for their kind permission to utilize the unpublished report on the Islamic pottery, and for Doron's stalwart support of the research presented by the author in this report and in many others. Finally, thanks are due to Salome Cohen (IAA and The Hebrew University) for facilitating the transfer of the manifold files from Reuven's report to the author.

pot, a casserole, storage jars and jugs, which range in date from the mid-seventh through the tenth centuries CE, i.e., the Umayyad and Abbasid periods.

THE FINDS

Floor 108

Only four diagnostic vessels were recovered from Floor 108, and all may be assigned a date in the Umayyad period, most likely in the early eighth century CE. One bowl (Fig. 1:1) is made of white fabric and exhibits an out-flaring rim with a curious, crenellated gutter below it (Stacey 2004:133). Bowls with a similar rim are known from Khirbat al-Mafjar (Baramki 1940–1942:68–69, Fig. 8:24, 25, Ware 10), which has been dated by Whitcomb (1988:56) to the eighth century CE.

Another vessel is a cooking pot with a swollen neck and a folded-over, rounded and collared rim (Fig. 1:2). The form is known from an Umayyad industrial context at Ramla (Tal and Taxel 2008: Fig. 6.91:2), and a contemporaneous example was also uncovered at Pella in northern Jordan (Walmsley 1982: Pl. 139:9).

The last two vessels (Fig. 1:3, 4) are decorated sherds from the upper shoulder of jugs, representing the Early Islamic manifestation of the Fine Byzantine Ware (hereafter FBW) tradition. One (Fig. 1:3) has reddish-yellow fabric, typical of locally produced vessels, with numerous tiny calcite inclusions; it is decorated with deep gouged incisions depicting a palmette motif. A close parallel for this vessel, found at Ras Abu Ma‘aruf in northern Jerusalem, was described as “similar in form to Early Islamic jugs, which are usually of buff ware” (Rapuano 1999:182, Fig. 9:131). This vessel also roughly corresponds to Magness’ (1993:236–239) FBW Jug Form 1B, dated from the mid-sixth to the late eighth centuries CE. The other decorated jug shoulder (Fig. 1:4) has brown fabric fired to a pink hue, with numerous tiny calcite inclusions. It is decorated with both straight-band combing and gouged incisions, and conforms to Magness’ (1993:240–241) FBW Jug Form 2B, dated from the mid-sixth to the early eighth centuries. A close parallel for this vessel with almost the exact same decoration was found in the so-called ‘Byzantine Storeroom’ at Ramat Raḥel (Aharoni 1962: Fig. 3:20).

Dismantlement of Wall 2 (L110)

Of the few diagnostic ceramics recovered during the dismantling of W2, two had a complete enough profile to provide a relative date for the wall’s construction. One (Fig. 1:5), a carinated bowl with a short, upright rounded rim, is made of a high-fired, well-levigated, metallic-sounding fabric, and reddish yellow (5YR 6/6) in color. The vessel is burnished on both the interior and exterior. This vessel conforms to Magness’ (1993:198–199) FBW Bowl Form 2B, dated from the seventh to the ninth/tenth centuries CE. It is also clearly related to the Fine Burnished Ware Bowls Subtype D, common in Abbasid-period contexts in Giv‘ati Parking Lot (Reuven 2020:381), even though the upright rim form typical of such vessels was not preserved in any of the examples from that excavation. A similar bowl

was uncovered at Bet She'an, where it was described as a late version of FBW bowls that continued to be produced until the ninth century CE (Bar-Nathan 2011:283, Fig. 11.35:6). The closest parallel for Fig. 1:5 is known from Sounding A of the excavations along the northern wall of the Old City of Jerusalem (Hamilton 1940: Fig. 8:7).

The other fairly complete sherd from this context is a jug stopper (Fig. 1:6) with a very pale brown fabric, containing numerous grits and tiny calcite inclusions. It has a shallow form, a flared rim and a depressed ring base. This stopper is similar to Magness' (1993:247) Lids and Stoppers Form 1, broadly dated from the sixth through the mid-eighth century CE. Similar examples are attested in Abbasid contexts at Ramla (Cytryn-Silverman 2010: Pl.

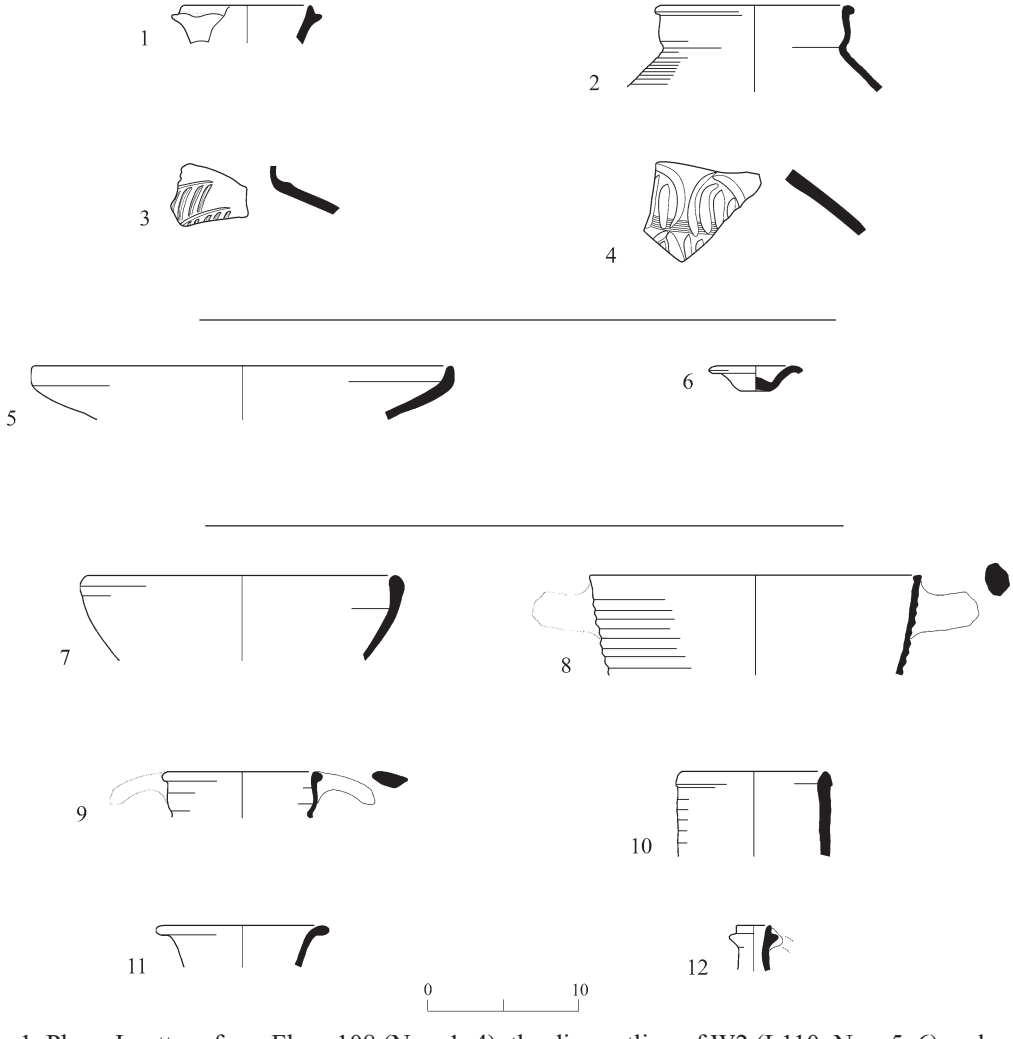

Fig. 1. Phase I pottery from Floor 108 (Nos. 1–4), the dismantling of W2 (L110; Nos. 5, 6) and collapsed debris (L111; Nos. 7–12).

◂ **Fig. 1**

No.	Type	Locus	Basket	Description	Parallels (Date)
1	Bowl	108 (=112)	2153/1	White (7.5YR 8/1) fabric	Baramki 1940:68–69, Fig. 8:24, 25 (8th c.)
2	Cooking Pot	108 (=112)	2199/2	Yellowish red (5YR 5/8) fabric	Tal and Taxel 2008: Fig. 6.91:2 Walmsley 1982: Pl. 139:9 (Umayyad)
3	Jug	108 (=112)	2153/3	Reddish yellow (7.5YR 6/6) fabric; numerous tiny calcite inclusions; decorated with deep gouged incisions on ext.	Magness 1993:236–239, FBW Jug Form 1B (mid-6th to late-8th c.) Rapuano 1999: Fig. 9:131
4	Jug	108 (=112)	2153/2	Brown (7.5YR 5/2) fabric, fired to pink (5YR 7/4); calcite inclusions; straight-band combing and gouged incised decoration on ext.	Magness 1993:241, No. 4, FBW Jug Form 2B (mid-6th to early-8th c.)
5	Bowl	110	2163/51	Reddish yellow (5YR 6/6) fabric; burnished on the int. and ext.	Hamilton 1940: Fig. 8:7 (first half of 9th c.) Magness 1993:198–199, FBW Bowl Form 2B Bar-Nathan 2011: Fig. 11.35:6
6	Stopper	110	2164	Very pale brown (10YR 8/3) fabric; numerous grits and calcite inclusions	Walmsley 1991: Fig. 3:9, in buff (mid-8th to mid-9th c.)
7	Bowl	111	2196/51	Reddish brown (5YR 5/4) fabric; gray (5YR 5/1) core; burnishing on interior and exterior	Cytryn-Silverman 2010: Pl. 9.1:2, similar (Abbasid)
8	Casserole	111	-	Yellowish red (5YR 5/8) fabric	Cytryn-Silverman 2010: Pl. 9.6:8, similar (Abbasid)
9	Cooking pot	111	2175	Yellowish red (5YR 5/8) fabric	Tal and Taxel 2008: Fig. 6.91:2 Walmsley 1982: Pl. 139:9 (Umayyad)
10	Jug	111	2214/1	Well-levigated reddish-yellow (5YR 6/6) fabric, fired to pink (5YR 7/4); highly burnished ext.	Cytryn-Silverman 2013: Fig. 7.5:5 Baramki 1940: Fig. 3:8 (9th c.)
11	Jug	111	2196	Reddish-yellow (5YR 6/8) fabric; pinkish-white (5YR 8/2) slip	Cytryn-Silverman 2010: Pl. 9.5:17, similar (Abbasid)
12	Juglet	111	2214/2	Reddish-yellow (5YR 6/6) fabric; very pale brown (10YR 8/2) slip	Rapuano 1999: Fig. 9:133, similar (Umayyad) Taxel 2009: Fig. 3.8:7

9.4:21) and Tiberias (Stacey 2004:125, Fig. 5.33:4), while the closest parallel for this jug stopper, similarly made of buff ware, is known from Pella in northern Jordan (Walmsley 1991: Fig. 3:9), where it is dated from the mid-eighth to the mid-ninth century CE.

Collapsed Debris (L111)

A small assemblage of Abbasid ceramics was uncovered beneath collapsed debris L111. While this context yielded a few Umayyad-period vessels, the latest vessels dated from the ninth century CE, and included a hemispherical bowl with a rounded thickened rim (Fig. 1:7). Similar bowls are known from Abbasid contexts in the White Mosque in Ramla (Cytryn-Silverman 2010: Pl. 9.1:2). Also found were two cooking vessels: a casserole (Fig. 1:8) and a cooking pot (Fig. 1:9). The casserole has a flanged rim, beveled on the interior; ribbing on the exterior walls; and two horizontal handles, oval in section. The cooking pot has a swollen neck and a folded-over, rounded collared rim. This form is known from an Umayyad industrial context at Ramla (Tal and Taxel 2008: Fig. 6.91:2), and a contemporaneous example was also uncovered at Pella in northern Jordan (Walmsley 1982: Pl. 139:9).

Closed vessels found in L111 included a jug (Fig. 1:10) with a long upright neck, terminating in a pointed rim, triangular in section, and a fairly deep horizontal incision just below the rim. A jug similarly made of finely-burnished ware was reported from Stratum IV (L672) at Giv‘ati Parking Lot, dating from the ninth century (Cytryn-Silverman 2013: Fig. 7.5:5), although, the walls of this parallel are slightly thinner than those of the sherd from Building 900. A relatively thick-walled specimen of this type of closed vessels is known from Khirbat al-Mafjar (Baramki 1940–1942: Fig. 3:8).

Locus 111 also yielded a jug with a flared rounded rim (Fig. 1:11), very similar in form to a jug from Floor 207 (see below, Fig. 2:9), but differing in their fabric. A close parallel for this jug is known from an Abbasid-period context at Ramla (Cytryn-Silverman 2010: Pl. 9.5:17). A juglet with an externally-flanged, offset, slightly out-turned rim (Fig. 1:12) has parallels at Khirbat es-Suyyagh in the Shephelah (Taxel 2009: Fig. 3.8:7) and Ras Abu Ma‘aruf in northern Jerusalem (Rapuano 1999: Fig. 9:133), both most likely dating to the Umayyad period.

Floor 207

The excavation of this floor yielded a large ceramic assemblage of predominantly Abbasid vessel forms—the latest pottery dating from the late-ninth to the mid-tenth century CE, mixed with a few representative types of the Umayyad period. As with the pottery assemblages from most Early Islamic strata from the Jerusalem region, a majority of the vessel types recovered from the Early Islamic contexts in Building 900 comprised bowls and basins. A bowl with a small ledge rim (Fig. 2:1) has parallels at Khirbat al-Mafjar (Baramki 1940–1942:68–69, Fig. 8:29), where they were classified as Ware 10 and dated to the eighth century CE (Whitcomb 1988:56).

Two bowls are hemispherical in form and have rounded and slightly out-turned rims. One (Fig. 2:2) has a close parallel in Phase 1 at Khirbat Abu Suwwana (Finkelstein 1997: Fig. 2:9), where it is dated between the mid-seventh and the mid-eighth centuries CE, an the other (Fig. 2:3) exhibits a shallow groove on the exterior, just below the rim. This bowl conforms to the Giv‘ati Grooved Bowls (Reuven 2020:384, Fig. 13.9), which date

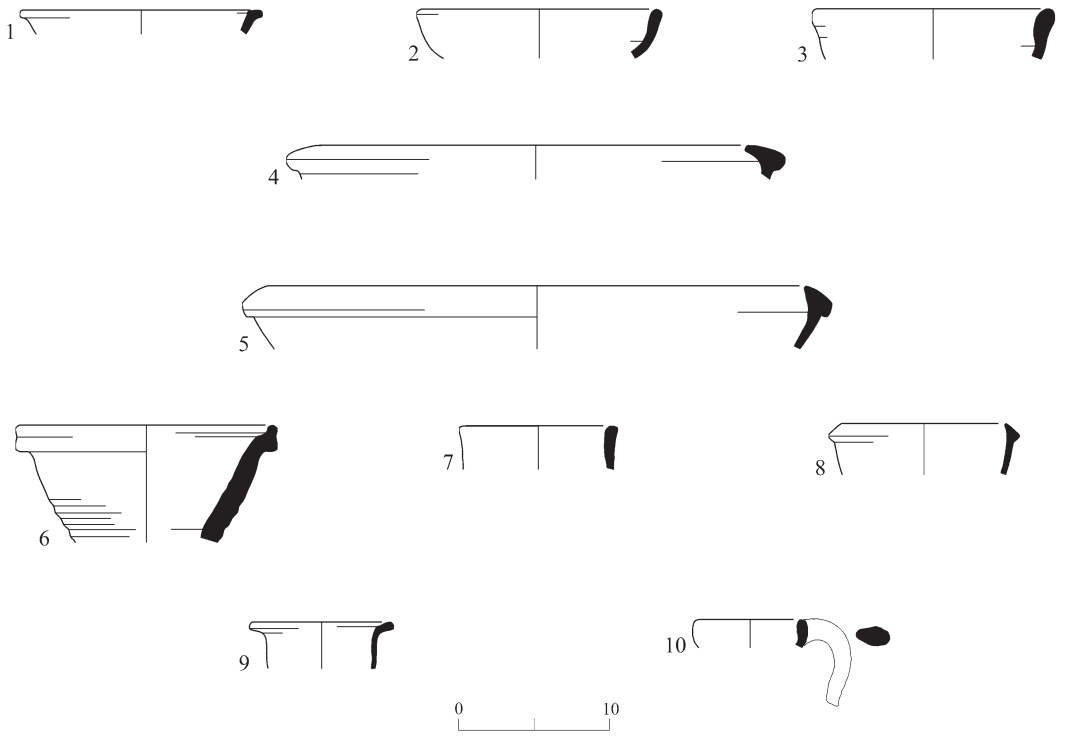

Fig. 2. Stratum I Pottery from Floor 207.

No.	Basket	Vessel	Description	Parallels (Date)
1	2527/55	Bowl	Light reddish-brown (5YR 6/4) fabric; reddish-gray (10R 5/1) slip	Baramki 1940: Fig. 8:29 (8th c.)
2	2527/59	Bowl	Red (2.5YR 5/6) fabric, fired to pinkish gray (5YR 7/2); gray (5YR 5/1) core	Finkelstein 1997: Fig. 2:9 (mid-7th to mid-8th c.)
3	2527/54	Bowl	Brown (7.5YR 5/4) fabric; calcite inclusions; pale red (2.5YR 7/4) slip	Reuven 2020: Fig. 12.9 (mid-8th to mid-9th c.)
4	2527/53	Basin	Reddish yellow (5YR 6/6) fabric; gray (5YR 5/1) core; highly burnished ext.	Avner 2005: Fig. 18:6 Abu-Uqsa 2005:55, Fig. 17:3 (Abbasid)
5	2527/57	Basin	Well-levigated reddish yellow (5YR7/6) fabric; gray (2.5Y 5/1) core; small calcite inclusions	Reuven 2020: Fig. 12.21:1 (9th through 10th c.)
6	2525	Basin	Reddish-yellow (5YR 6/6) fabric	Bar-Nathan 2011: Fig. 11.35:2, similar (Umayyad)
7	2527/61	Store Jar	Pink (7.5YR 8/3) fabric; light gray (10YR 7/2) core	Cytryn-Silverman 2010: Pl. 9.2:13 Arnon 2008:221, Type 831d, Str. VI (late 9th to mid-10th c.)
8	2527/57	Store Jar	Reddish-yellow (5YR 6/6) fabric; calcite inclusions; pinkish white (5YR 8/2) slip	Cytryn-Silverman 2013: Fig. 7.5:5, similar (9th c.)
9	2527/52	Jug	Light reddish-brown (5YR 6/4) fabric, fired to pink (5YR 7/4)	Cytryn-Silverman 2010: Pl. 9.4:20 (Abbasid)
10	2527/58	Juglet	Reddish-yellow (5YR 6/6) fabric; very pale brown (10YR 8/2) slip	Arnon 2008:145, Type 5221 Eisenberg and Ovadiah 1998: Fig. 16:9 (mid-8th to late 9th c.)

from the early Abbasid period. Although no exact parallels were found for this grooved vessel, fairly similar examples, designated Plain Bowls Type I, are known from Yoqne‘am (Avissar 1996:117, Fig. XIII.64:2), where they were assigned an Early Islamic date. Bowls of this type are also known from an excavation along the northern wall of the Old City of Jerusalem (Hamilton 1940: Fig. 9.2).

Two basins with incurved rims were found. One basin (Fig. 2:4) has parallels at the Bet She’an Tourist Center excavations (Abu-Uqsa 2005:55, Fig. 17:3), and a monastery at Deir Ghazali in northern Jerusalem (Avner 2000: Fig. 18:6), where it is most likely dated to the Abbasid period. The other basin (Fig. 2:5), conforms to a type designated Giv‘ati Incurved-Rim Basins Subtype C (Reuven 2020:396, Fig. 13.21:1), dated from the ninth to the end of the tenth century CE. A parallel for this type is attested in Area A of the Jewish Quarter excavations in Jerusalem, where it was assigned to a category of Arched-Rim Basin Form 2A, dated from the eighth to the tenth century CE (Magness 2003: Pl. 18.1:14). Another parallel is known from Phase 1 at Khirbat Abu Suwwana near Jerusalem (Finkelstein 1997:22, Fig. 2:8), assigned a date from the mid-seventh to the mid-eighth century CE.

Yet another basin, or a large deep bowl (Fig. 2:6), has thick inclined walls and exterior ribbing, and is made from fabric typical of local production. Its form is unique, consisting of a collared rim with a rounded lip and grooved offset interior. An incised horizontal groove at the mid-point of the rim exterior is relatively deep in comparison to the narrow rim diameter. While no exact parallels for this vessel are known, a fairly similar vessel came from an Umayyad context at Bet She’an (Bar-Nathan 2011: Fig. 11.35:2).

Closed vessels from the ceramic assemblage of Floor 207 include a storage jar with an upright, rounded and slightly out-turned rim (Fig. 2:7). It conforms to Caesarea Type 831d (Arnon 2008:221), assigned to Stratum VI at the site, and dated from the late-ninth to the mid-tenth century CE, as well as an example from an Abbasid context in the White Mosque at Ramla (Cytryn-Silverman 2010: Pl. 9.2:13). Another storage jar with a collared everted rim, triangular in section (Fig. 2:8), has a pinkish white slip on the rim exterior that continues just below the rim. A similar jar was found in Giv‘ati Parking Lot Stratum IV (Cytryn-Silverman 2013: Fig. 7.5:5), where it was dated to the ninth century CE.

Two jugs from Floor 207 include one (Fig. 2:9) with a flared rounded rim, with a parallel in Ramla, dating from the Abbasid period (Cytryn-Silverman 2010: Pl. 9.4:20), and another (Fig. 2:10), with an upturned rounded rim, with the worn remains of a very pale brown slip on the exterior. It conforms to Caesarea Type 5221 (Arnon 2008:145), from Stratum VII at that site, dated from the mid-eighth to the late-ninth century CE, and an example from a Byzantine monastery at Mevo Modi‘im (Eisenberg and Ovadiah 1998: Fig. 16:9).

DISCUSSION AND CONCLUSIONS

According to the ceramic evidence recovered from several Phase I loci in Building 900, the following comments can be made regarding the chronology of this stratigraphic context. The assemblage from Floor 108 comprised forms that are all typical of the Umayyad period, indicating a date in the early eighth century CE. With regard to L110, material from the dismantling of W2, the presence of the fine burnished-ware bowl (Fig. 1:5) and the buff-ware jug stopper (Fig. 1:6), indicate a date in the early Abbasid period, most likely during the first half of the ninth century CE. The pottery from L111, under the collapsed debris of Building 900, was predominantly Abbasid—the most precisely datable form being the fine burnished ware jug (see Fig. 1:10) dated firmly in the ninth century CE; two of the six illustrated vessels from this context (Figs 1:9, 12) date to the Umayyad period. Finally, the latest diagnostic sherds, recovered from Floor 207, are represented by a vessel designated as Incurved Rim Basin Type C (Fig. 2:5) and storage jar Type 831d (Fig. 2:7), both of which have terminal dates in the mid- to late tenth century CE. Five of the other eight vessels illustrated here are clearly Abbasid-period types and three vessels are assigned an Umayyad date. Floor 207, thus, would seem to have been laid sometime in the late Abbasid period, probably in the early tenth century CE. The Early Islamic assemblage from Building 900 permits important insights into the occupation history of the area immediately to the south of the present-day Old City of Jerusalem.

REFERENCES

Abu-Uqsa H. 2005. *Bet She'an in the Early Islamic Period I–II (661–969 CE) as Reflected in the Ceramic Assemblages form the Tourist Center Excavations*. M.A. thesis. University of Haifa. Haifa (Hebrew; English summary).

Aharoni Y. 1962. *Excavations at Ramat Raḥel* I: *Seasons 1959 and 1960* (Centro di studi semitici, serie archeologica 2). Rome.

Arnon Y.D. 2008. *Caesarea Maritima: The Late Periods (700–1291 CE)* (BAR Int. S. 1771). Oxford.

Avner R. 2000. Deir Ghazali: A Byzantine Monastery Northeast of Jerusalem. *'Atiqot* 40:25*–52* (Hebrew; English summary, pp. 160–161).

Avissar M. 1996. The Medieval Pottery. In A. Ben-Tor, M. Avissar and Y. Portugali. *Yoqne'am* I: *The Late Periods* (Qedem Reports 3). Jerusalem. Pp. 75–172.

Baramki D.C. 1940–1942. The Pottery from Kh. el Mefjer. *QDAP* 10:65–103.

Bar-Nathan R. 2011. The Pottery Corpus. In R. Bar-Nathan and W. Atrash eds. *Bet She'an* II: *Baysān; The Theater Pottery Workshop* (IAA Report 48). Jerusalem. Pp. 229–343.

Cytryn-Silverman K. 2010. The Ceramic Evidence. In O. Gutfeld. *Ramla: Final Report on the Excavations North of the White Mosque* (Qedem 51). Jerusalem. Pp. 97–211.

Cytryn-Silverman K. 2013. The Islamic-Period Pottery. In D. Ben-Ami. *Jerusalem: Excavations in the Tyropoeon Valley (Giv'ati Parking Lot)* I (IAA Reports 52). Jerusalem. Pp. 167–204.

Eisenberg E. and R. Ovadiah. 1998. A Byzantine Monastery at Mevo Modi'im. *'Atiqot* 36:1*–19* (Hebrew; English summery, pp. 123–124).

Finkelstein J.C. 1997. The Islamic Pottery from Khirbat Abu Suwwana. *'Atiqot* 32:19–34.

Hamilton R.W. 1940. Excavations against the North Wall of Jerusalem, 1937–8. *QDAP* 10:1–54.

Magness J. 1993. *Jerusalem Ceramic Chronology, Circa 200–800 CE* (*JSOT*/ASOR Monograph Series 9). Sheffield.

Magness J. 2003. Late Roman and Byzantine Pottery. In H. Geva. *Jewish Quarter Excavations in the Old City of Jerusalem Conducted by Nahman Avigad, 1969–1982* II: *The Finds from Area A, W and X-2; Final Report*. Jerusalem. Pp. 423–432.

Rapuano Y. 1999. The Hellenistic through Early Islamic Pottery from Ras Abu Ma'aruf (Pisgat Ze'ev East A). *'Atiqot* 38:171–203.

Reuven P. 2020. The Early Islamic Pottery. In D. Ben-Ami and Y. Tchekhanovets. *Jerusalem: Excavations in the Tyropoeon Valley (Giv'ati Parking Lot)* II: *The Byzantine and Early Islamic Periods* (IAA Reports 66/2). Jerusalem. Pp. 375–521.

Stacey D. 2004. *Excavations at Tiberias, 1973–1974: The Early Islamic Periods* (IAA Reports 21). Jerusalem.

Szanton, N. and Uziel, J. This volume. A Byzantine and Early Islamic Building along the Southern Tyropoeon Valley.

Tal O. and Taxel I. 2008. Ramla (South): An Early Islamic Industrial Site and Remains of Previous Periods (Salvage Excavation Reports 5). Tel Aviv.

Taxel I. 2009. *Khirbet es-Suyyagh: A Byzantine Monastery in the Judaean Shephelah* (*Salvage Excavation Reports* 6). Tel Aviv.

Walmsley A.G. 1982. The Umayyad Pottery and Its Antecedents. In A. McNicoll, R. H. Smith, and B. Hennessy eds. *Pella in Jordan* 1: *An Interim Report on the Joint University of Sydney and The College of Wooster Excavations at Pella 1979–1981*. Canberra. Pp. 143–157.

Walmsley A. 1991. Architecture and Artefacts from Abbasid Fihl: Implications for the Cultural History of Jordan. In M.A. Bakhit and R. Schick eds. *Bilad al-Sham during the Abbasid Period (132 AH/750 A.D.–451 AH/1059 A.D.)* II *(Proceedings of the Fifth International Conference on the History of Bilad al-Sham, 7–11 Sha'ban 1410 A.H./4–8 March, 1990)*. Amman. Pp. 135–159.

Whitcomb D.S. 1988. Khirbet al-Mafjar Reconsidered: The Ceramic Evidence. *BASOR* 271:51–67.