'Atiqot 112, 2023

The Glass Finds from Building 900 in the Southern Tyropoeon Valley

Tamar Winter[1]

The excavation of Building 900, located in the City of David, yielded about 1000 small glass fragments, mostly dating to the Late Hellenistic, Early and Late Roman–Byzantine periods, with several dating to the Umayyad period. Also found were 12 windowpane fragments, apparently dating to the Early Islamic period, permitting a reconstruction of their manufacturing process.

Keywords: City of David, glass, manufacture, restoration, windowpanes, blowing technique

Introduction

The excavation of Building 900 in the southern Tyropoeon Valley of the City of David yielded nearly 1000 small glass fragments, about one-fifth of which were diagnostic.[2] Most of the finds date to the Late Hellenistic period (Fig. 1:1), the Early Roman period (Fig. 1:2–5) and the Late Roman–Byzantine periods (Fig. 2); several finds from the later phase belong to types that were also in use in the Umayyad period. It is noteworthy that no glass finds or coins (see Ariel and Bijovsky, this volume) were uncovered in the Abbasid–Fatimid-period contexts, although an Abbasid-period occupation phase (Phase I; see Szanton and Uziel, this volume) was identified at the site, based on the pottery finds (see Dolinka, this volume).

The Finds

The Late Hellenistic Period

Cast Conical Bowl Adorned on the Interior with Grooves and a Beaded Band (Fig. 1:1).—This exceptionally well-preserved bowl is adorned on the interior wall, below the rim, with several horizontal grooves, a characteristic decorative pattern of cast bowls of the

[1] Dr. Tamar Winter, Israel Antiquities Authority.

[2] This glass report was completed in 2014 and partially updated in 2023. The glass finds were drawn by Carmen Hersch and photographed by Clara Amit, both of the IAA.

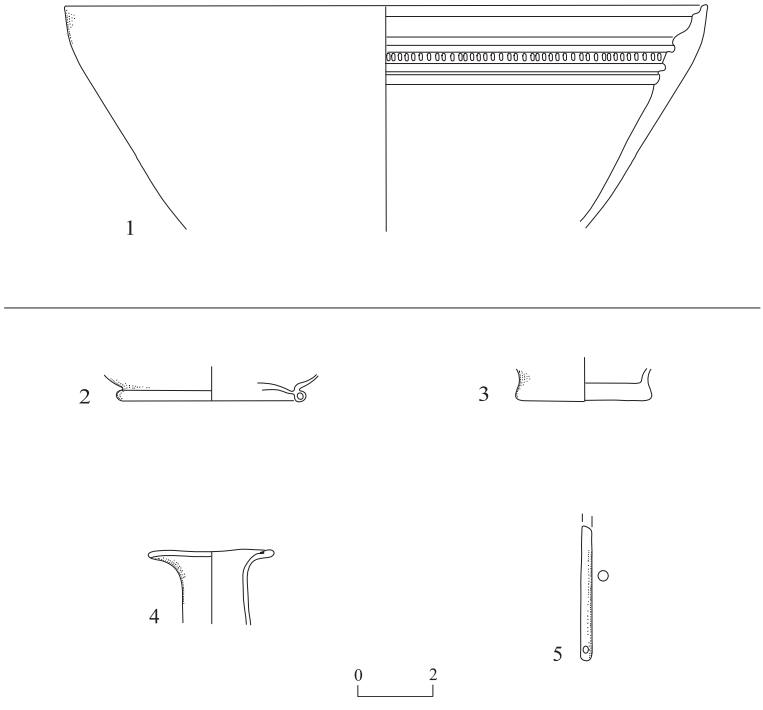

Fig. 1. Glass finds of the late Hellenistic (No. 1) and the Early Roman (Nos. 2–5) periods.

No.	Locus	Basket	Description
1	122	2481	Cast bowl with a rim (diam. 170 mm) and thick slanting walls; several horizontal grooves on int. below rim, the band between them is adorned with a 'beaded' decoration; light green; weathering, iridescence
2	123	2430	Hollow ring base (diam. 50 mm); light greenish blue; weathering, iridescence
3	207	2532	Flat solid base (diam. 35 mm) with a pontil scar on the underside; light green; severe weathering, iridescence
4	109	7466	Rounded, unevenly infolded rim (diam. 33 mm) and vertical neck; light blue; weathering, iridescence
5	121	2380	Circular-sectioned rod (diam. 2.5–3.0 mm) with a thick rounded end; broken (surviving length 36 mm); color indiscernible due to weathering; weathering, iridescence

late Hellenistic period; a band in between two of the grooves is adorned with a 'beaded' decoration.

Conical and hemispherical cast bowls of this type, adorned with interior grooves, are classified under Grose's Group A, attributed mainly to the second–first centuries BCE (Grose 1979:55–59; Gorin-Rosen 2003b:375–376). The presence of a beaded horizontal band on the specimen from Jerusalem assigns it to a rare type of cast glass bowls from the eastern Mediterranean basin. The 'beaded' decoration, occasionally appearing on both

glass and ceramic bowls, most probably imitated metal bowls of the late Hellenistic period (Barag 1971:203, nn. 14 and 15; Weinberg 1988:70–71; Nenna 1999:89).

A colorless glass bowl adorned with a beaded band of this type was unearthed at another location in the City of David, the Giv‘ati Parking Lot excavations.[3] Similarly decorated bowls were recovered in late Hellenistic-period contexts in ‘Akko (Gorin-Rosen 2012: Fig. 10:1), Tel Shor in the Jezreel Valley,[4] Caesarea Maritima (Israeli 2008:370, 396, Cat. No. 2; and an unpublished excavation in Insula W2S3[5]) and Ashdod (Barag 1971:203, No. 6, Fig. 105:8). Four analogous examples are known from Maresha, where three of the specimens originated in contexts dated to the second–first centuries BCE, and one in a context dated to the third–second centuries BCE (Jackson-Tal 2004:20–21, Fig. 11; 2019:244, Fig. 14.7:1, and see therein references to additional examples). A bowl with a beaded band was also uncovered in a late Hellenistic-period context at Beirut (Foy 2005:20, Fig. 12:7), and several bowls of this type were found at Delos, in contexts dated to the late second–early first centuries BCE (Nenna 1999:89–90, Pl. 26:C210–C215).

The Early Roman Period

This assemblage includes free-blown vessels and a rod, dating mostly to the first–second centuries CE.

Bowl with a Low, Hollow Ring Base (Fig. 1:2).— Bowls with a base of this type were common in the Early Roman period. Similar bases were unearthed in other locations in the Jerusalem area, including other excavations in the City of David (Ariel 1990:163, Fig. 33:GL87; Gutreich 2013:271, Fig. 12.2:26), and a dwelling cave on the Mount of Olives (Winter 2000: Fig. 10:2, 3). Analogous examples from a settlement at Shu‘afaṭ (Katsnelson 2009:164, Fig. 3:7) and a *miqveh* near Alon Shevut (Gorin-Rosen 1999a: Fig. 2:1) date to the last third of the first century CE and the first third of the second century CE.

Solid Pressed Base (Fig. 1:3).— Bases of this type, occasionally adorned with vertical ribbing, belonged to bowls, beakers and jars, which were widespread during the second half of the first and the first third of the second centuries CE. Similar bases were discovered in other excavations in the City of David (Ariel 1990:151, 153, 161–163, Figs. 30:GL27; 33:GL84–GL86; Gutreich 2013:271, Fig. 12.2:25), as well as in the Burnt House in the

---

[3] Work carried out in Area 10 of these excavations (License Nos. G-71/2017, G-11/2018) was part of a joint expedition of the IAA and Tel Aviv University, and the glass finds were studied by the author.

[4] This unpublished excavation (Permit No. A-5208/2007), on behalf of the IAA, was headed by Eli Yannai, and the glass finds were studied by the author.

[5] This excavation was carried out by IAA in 1992–1998 (Area I), in the southwestern part of Caesarea Maritima. The excavation results were investigated by Yosef Porath and Peter Gendelman, and the glass finds were studied by the author.

Jewish Quarter (Israeli 2010:222–224, Figs. G8–G16) and the compound of the Jerusalem International Convention Center (Gorin-Rosen 2005:199, Fig. 1:7, 8). These bases were also common in the southern Judean Hills, the Judean Desert and the Dead Sea region (Jackson-Tal 2007:480, 482, Pls. 4:4, 5; 5:5, and see further references therein).

Candlestick-Type Bottle (Fig. 1:4).— This unevenly infolded rim is characteristic of candlestick-type bottles, which were widespread throughout the Roman Empire and that are common finds in burial contexts of the late first–mid-third centuries CE in Syria-Palestine (Barag 1970:209–212, Fig. 46, Type 21; Winter 1996:96–98, Figs. 5.4, 5.5, and see further references therein). Candlestick-type bottles with a similar rim were discovered in the Jerusalem area, for example, in burial caves at Akeldama in the Kidron Valley (Winter 1996:96–98, Fig. 5.4) and in a settlement at Shuʻafaṭ, inhabited during the last third of the first and the first third of the second centuries CE (Katsnelson 2009:165–166, Fig. 5:3–6).

Rod (Fig. 1:5).— This thin cylindrical rod was rounded at one end. Glass rods, some spirally twisted, were used as applicators, stirring rods, hair ornaments, or tools in the production process of beads and *millefiori* objects. Rods appeared in the Hellenistic period and became widespread in the Early Roman period (Isings 1957:94–95, Form 79; Spaer 2001:262).

Numerous thin rods, among them many plain rods with a rounded end, were discovered in Jerusalem's Jewish Quarter, in a glass workshop that functioned in the mid-first century BCE (Israeli and Katsnelson 2006:417–419, Pl. 21.7:GL59–GL64). Several such plain rods were unearthed in contexts of the Early Roman period at Gamla (Jackson-Tal 2016:200–201, Fig. 13.5:37, 38).

The Late Roman–Byzantine/Umayyad Periods

The glass artifacts classified under this category (Figs. 2; 3) are mostly common finds in archaeological sites, including funerary contexts, in Jerusalem and the vicinity. They are characteristic of the fourth–seventh centuries CE, while several of the finds (Fig. 2:7–9) belonged to types that remained in use in the Umayyad period.

The vessels, made of translucent glass, mostly in light shades of green and blue, include bowls, beakers and bottles (Fig. 2), as well as wineglass fragments and hollow lamp stems (not illustrated). Some of the vessels are decorated with applied blue trails. The excavation also yielded an item that may have been used as an inset (Fig. 2:9) and windowpane fragments (see below).

Bowls and Beakers Adorned with Trail Decoration (Fig. 2:1–3).— One vessel (Fig. 2:1), with an out-splaying rim, was probably part of a bowl. The other two (Fig. 2:2, 3) were probably deep bowls or beakers, and they may have been used as lamps or drinking vessels, although the presence of protruding trails probably precludes the latter possibility. The base in Fig. 2:6 (see below) may have belonged to the bowl illustrated in Fig. 2:3 as it was found in the same basket.

Bowls and beakers decorated with applied and fused-in trails, typically of a hue darker than that of the vessel, appeared in the Late Roman period and continued into the Byzantine and the Umayyad periods, with changes in the shape, fabric and color taking place over this time span (Gorin-Rosen and Katsnelson 2007:84–85, Fig. 5:1, 2; Winter 2019:27, Type BLtd).

Vessels with a rounded rim and dense trail windings on the rim and the wall were discovered in other excavations in the City of David (Gutreich 2013:281, Fig. 12.6:85, 87; Winter 2019:132, Fig. 5.4.1:2), the Western Wall Plaza (Gorin-Rosen 2021b:61, Fig. 2.12:79) and Bet Zayit, on the outskirts of present-day Jerusalem (Winter 2019:169, Fig. 5.10.1:3–6).

Tall Pushed-In Ring Base (Fig. 2:4).— This base was probably part of a beaker or a jug. Pushed-in bases with a hollow ring characterize various vessel forms from the Late Roman–early Byzantine periods (Gorin-Rosen and Katsnelson 2007:93, Fig. 8:11–13, and see therein discussion and references to additional examples). Complete jugs with a pushed-in base were unearthed, for example, at Ḥorbat Qasṭra (Gorin-Rosen and Katsnelson 1999:27*, Fig. 51, Color Plate iii:6, 9), and in burials at Ẓippori, where they were probably produced in the fourth–early fifth centuries CE (Israeli 2005).

Beaker with a Solid Base (Fig. 2:5).— This base belonged to a 'beaker with a solid base,' a type that generally had a rounded rim and a cylindrical body, occasionally flaring at the top, and adorned with an applied horizontal trail below the rim. Beakers with a solid base were widespread in Syria-Palestine and provide a firm date in the fourth–early fifth centuries CE (Weinberg and Goldstein 1988:60–62, Fig. 4-23; Gorin-Rosen and Katsnelson 2007:93, Fig. 8:3–9, and see therein discussion and references to many additional examples; Gorin-Rosen 2009:88–90, Fig. 2.53:1–9).

Bases and upper parts of beakers of this type were discovered in Jerusalem and its environs, for example, in other excavations in the City of David (Ariel 1990:152, 161, Fig. 32:GL76; Gutreich 2013:278, Fig. 12.4:67–70; 2020:204, Fig. 6.1:7), the Assyrian Monastery in the Armenian Quarter of the Old City (Gorin-Rosen 2021a: Fig. 24:6), Tomb 483 at the Dominus Flevit compound on Mount of Olives (Bagatti and Milik 1958:146, Fig. 34:20, 21), Ha-Nevi'im Street (Winter 2020: Fig. 1:2), Khirbat Ka'kul (Gorin-Rosen 2006:108, Fig. 1:3), Ras Abu Ma'aruf (Gorin-Rosen 1999b:207, Fig. 1:4–6), Khirbat Ṭabaliya (Gorin-Rosen 2000:83*, Fig. 2:7) and Beit Ṣafafa (Gorin-Rosen 2003a:227, Fig. 28:1, 2).

Slightly Concave Base (Fig. 2:6).— This base may have belonged to the bowl illustrated in Fig. 2:3 (see above), based on the close resemblance in their fabrics and their shared provenance.

Bottle with an Infolded Rim (Fig. 2:7).— This bottle with an infolded rim and a wide cylindrical neck is a variant of a group of long-necked bottles, which formed the most common bottles in the fifth–seventh centuries CE. Similar bottles were recovered from

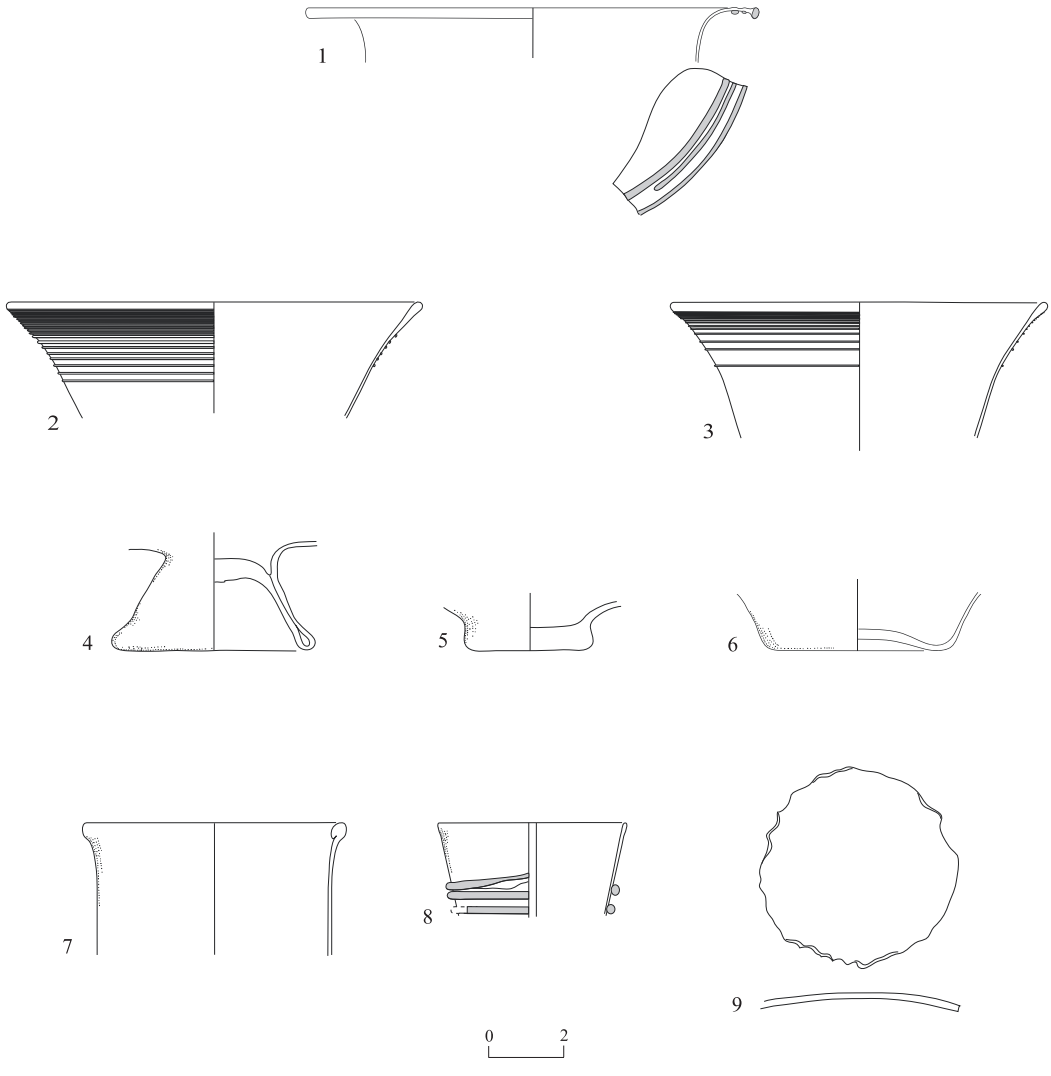

Fig. 2. Glass finds of the Late Roman–Byzantine/Umayyad periods.

various excavations in and around Jerusalem (Winter 2019:41–42, Type BTir/ln; Gorin-Rosen and Winter 2022:239, Fig. 9.4:29, and see further references therein).

Bottle Adorned with Trail Decoration (Fig. 2:8).— Bottles of this type have a funnel-shaped mouth and/or a long cylindrical neck, with trails wound around one or both. They were widespread during the Byzantine–Umayyad periods, and are abundant in excavations in and around Jerusalem (Winter 2019:43–46, Type BTtd, and see therein discussion and references to additional examples), including the City of David (e.g., Ariel 1990:160–161, Fig. 32:GL67; Gutreich 2013:284, Fig. 12.8:121).

◂ **Fig. 2**

No.	Locus	Basket	Description
1	104	2024	Rounded rim (diam. 120 mm) and thin out-splaying walls that create a 'shelf'; thin, dark blue, horizontally wound trail is fused-in on the rim and protrudes below it; light blue; weathering, iridescence
2	114	2224	Rounded rim (diam. 110 mm) and thin out-splaying walls; a horizontally wound, thin blue trail is dense just below the rim, becoming less dense farther down the wall; light greenish blue; weathering, iridescence
3	111	2198	Rounded rim (diam. 100 mm) and thin out-splaying walls; a horizontally wound, thin blue trail is dense just below the rim, becoming less dense farther down the wall; colorless with bluish tinge; weathering, iridescence
4	107	2046	Large pushed-in ring base (diam. 52 mm) with a convex floor, and a pontil scar on the underside; light greenish blue, bubbles; weathering, iridescence
5	209	2545	Flat solid base (diam. 31 mm) with a pontil scar on the underside; greenish blue; weathering, iridescence
6	111	2198	Slightly concave bottom (diam. 50 mm) and thin slanting walls; light greenish blue; weathering, iridescence
7	111	2198	Rounded infolded rim (diam. 70 mm) and vertical neck; bluish green; weathering, iridescence
8	120	2338	Rounded rim (diam. c. 50 mm), and a conical mouth/neck adorned with a blue trail wound horizontally c. 15 mm below the rim; light blue; weathering, iridescence
9	116	2309	Thin piece of a cut, disc-shaped glass (diam. 12.5–13.0 mm; thickness c. 0.5 mm) with a corrugated edge; light green; iridescence

Small Flat Disc (Fig. 2:9).— This thin disc with a corrugated edge was discovered alongside glass vessels of the Late Roman–Byzantine periods. It may have been used as an inset, as was the case with a slightly larger glass disc of an unclear date from Samaria-Sebaste, which was found set in a metal frame (Beck and Crowfoot 1957:392, 398, Fig. 92:85).

Corrugated-edge discs resembling this example were recovered from several Byzantine-period contexts from yet unpublished excavations in the Jerusalem area (Winter 2019:84–85, Type ARTSD). Four greenish blue discs resembling the one illustrated in Fig. 2:9 were found at Khirbat el-Shubeika in Western Galilee, in a burial cave that was used during the fourth–early eighth centuries CE (Katsnelson 2002:327, 329–330, Table 2: Nos. 31, 32, 34, Fig. 2:24, 24a, 24b, and see therein references to additional examples from Western Galilee).

Windowpane Fragments
Adrienne Varnai-Ganor

Twelve window fragments were found together (L103, B2071; Fig. 3:2) in Building 900, in a fill overlying W1 and W4, apparently belonging to Early Islamic Phase I (see Szanton and

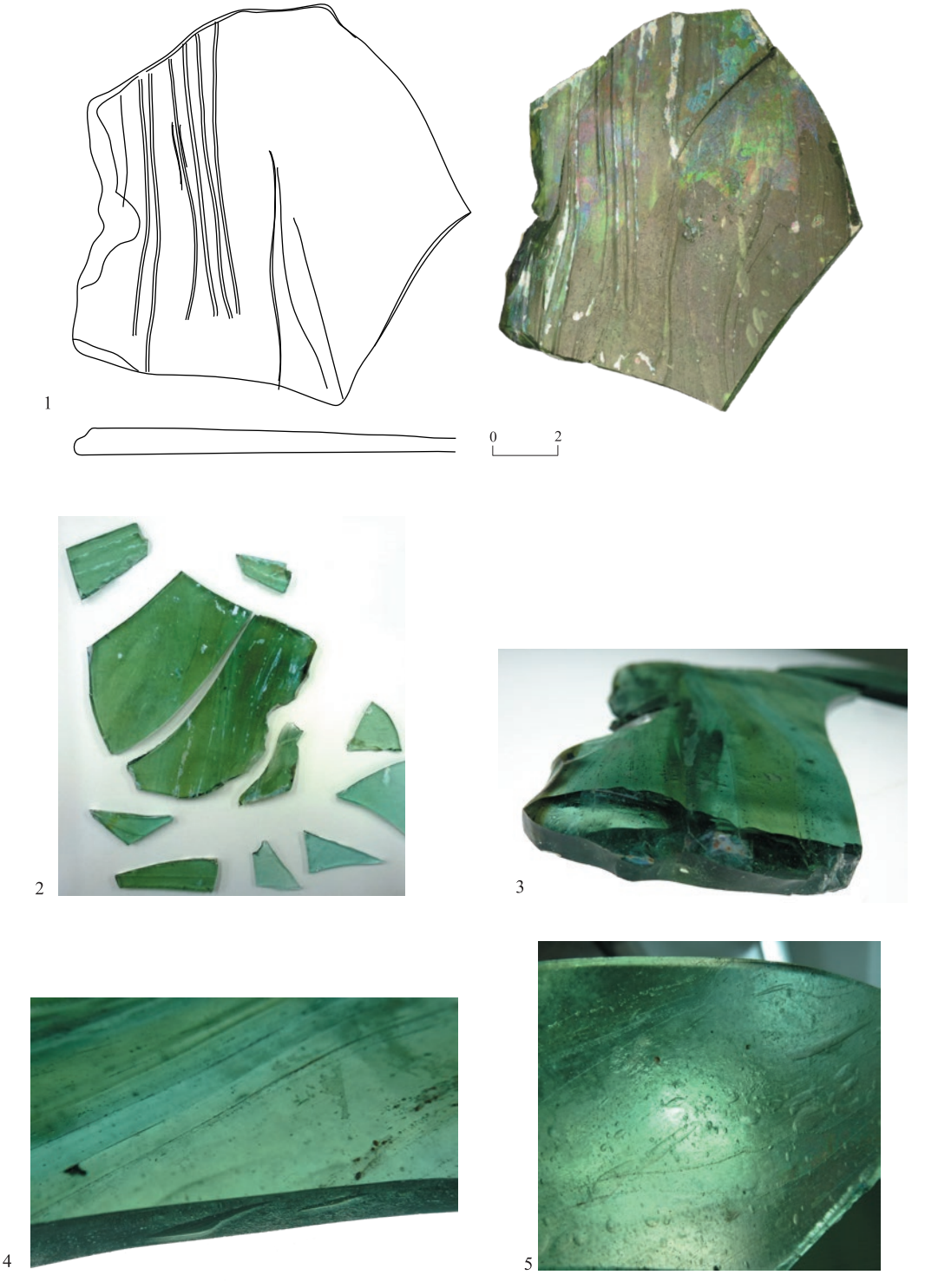

Fig. 3. Glass window fragments from L103: (1) part of glass window, refitted from three fragments; (2) 12 glass window fragments; (3) the refitted piece, with marks resulting from flattening of the glass during production; (4) section of a glass fragment showing elongated bubbles; (5) elongated bubbles within a glass fragment.

Uziel, this volume). Eight fragments, including three pieces that could be refitted (Fig. 3:1), seem to form part of one window, based on their close similarity of their fabric (minimum reconstructed size 110 × 110 × 4–8 mm). A few observations relevant to reconstructing the manufacturing process of the windowpanes were made during restoration and preservation work on the fragments.

It is generally understood that during the Byzantine period glass windows were made using the blowing technique, while it is less likely that windows at that time were mold-made, a process in which hot glass was poured into a mold made of sand or wood and subsequently flattened either with a spatula or a cylinder, usually made of wood (Theophilus, *De Diversis Artibus*; Kanyak 2009).

According to marks detected on the fragments and small bubbles observed within the glass, it appears that the window found in Building 900 was blown in a cylindrical fashion, after which it was cut and stretched to size. As none of the tool marks on the fragments indicated use of the technique of blowing in a circular motion, the blowing motion must have been cylindrical. Elongated bubbles caught in the hot glass are a diagnostic mark of cylindrical blowing, since they became elongated during the blowing and stretching process. A set of such bubbles which are horizontally oriented in relation to what would have been the axis of the glazier's tools, the rod and inflating tube, likely formed in the initial stage of blowing and stretching, while bubbles oriented parallel to that axis (Fig. 3:4) formed later in the process.

The fragments appearing to belong to one window demonstrate that it was relatively thick. They bear signs of tools used to flatten the glass when still hot by pushing against it during the manufacturing process (Fig. 3:3). An important diagnostic mark is the fact that part of the window was relatively shiny, while other parts were slightly mat. During the blowing process involved in producing windows, a glass bubble was formed which was then stretched to the desired length, after which it was disconnected from the inflating tube and the glazier's rod, cutting the window lengthwise (Theophilus, *De Diversis Artibus*; Kanyak 2009). The glass was then laid on a bed of sand at the base of the furnace, with the part of the bubble intended to serve as the exterior of the window facedown, creating a slightly mat complexion. The part of the bubble intended to serve as the interior of the window was at that moment exposed to the furnace's heat, acquiring a shinier appearance (Fig. 3:1). Also barely visible on some of the fragments are the gagged edges formed when the blown glass was severed from the glazier's inflating tube and rod.

References

Ariel D.T. 1990. Glass. In D.T. Ariel. *Excavations at the City of David 1978–1985 Directed by Yigal Shiloh* II: *Imported Stamped Amphora Handles, Coins, Worked Bone and Ivory, and Glass* (Qedem 30). Jerusalem. Pp. 149–166.

Ariel D.T. and Bijovsky G. This volume. The Coins from Building 900 in the Tyropoeon Valley.

Bagatti B. and Milik J.T. 1958. *Gli scavi del 'Dominus Flevit' (Monte Oliveto-Gerusalemme)* I: *La necropoli del periodo romano (SBF Collectio Maior 13).* Jerusalem.

Barag D. 1970. *Glass Vessels of the Roman and Byzantine Periods in Palestine*. Ph.D. diss. The Hebrew University. Jerusalem (Hebrew; English summary, pp. I–VIII).

Barag D. 1971. The Glass Vessels. In M. Dothan. *Ashdod* II–III: *The Second and Third Seasons of Excavations 1963, 1965, Soundings in 1967* (*'Atiqot* [*ES*] 9–10). Jerusalem. Pp. 202–205.

Beck H.C. and Crowfoot G.M. 1957. Beads and Insets. In J.W. Crowfoot, G.M. Crowfoot and K.M. Kenyon. *Samaria-Sebastia* III: *The Objects from Samaria*. London. Pp. 391–398.

Dolinka B.J. This volume. Early Islamic Pottery from Building 900 in the Southern Tyropoeon Valley.

Foy D. 2005. Une production de bols moulés à Beyrouth à la fin de l'époque hellénistique et le commerce de ces verres en Méditerranée occidentale. *JGS* 47:11–35.

Gorin-Rosen Y. 1999a. The Glass Vessels from the *Miqveh* near Alon Shevut. *'Atiqot* 38:85–90.

Gorin-Rosen. Y. 1999b. Glass Vessels from Ras Abu Ma'aruf (Pisgat Ze'ev East A). *'Atiqot* 38:205–214.

Gorin-Rosen Y. 2000. The Glass Vessels from Khirbet Ṭabaliya (Giv'at Hamaṭos). *'Atiqot* 40:81*–95* (Hebrew; English summary, pp. 165–166).

Gorin-Rosen Y. 2003a. Glass. In N. Feig. Excavations at Beit Ṣafafa: Iron Age II and Byzantine Agricultural Installations South of Jerusalem. *'Atiqot* 44:226–229.

Gorin-Rosen Y. 2003b. Glass Vessels from Area A. In H. Geva. *Jewish Quarter Excavations in the Old City of Jerusalem Conducted by Nahman Avigad, 1969–1982* II: *The Finds from Areas A, W and X-2; Final Report*. Jerusalem. Pp. 364–400.

Gorin-Rosen Y. 2005. The Glass. In B. Arubas and H. Goldfus eds. *Excavations on the Site of the Jerusalem International Convention Center (Binyanei Ha'uma): A Settlement of the Late First to Second Temple Period, the Tenth Legion's Kilnworks, and a Byzantine Monastic Complex; The Pottery and Other Small Finds* (*JRA* Suppl. S. 60). Portsmouth, R.I. Pp. 195–210.

Gorin-Rosen Y. 2006. The Glass Vessels from Khirbat Ka'kul. *'Atiqot* 54:107–112.

Gorin-Rosen Y. 2009. The Glass Vessels from Strata 9–6. In N. Getzov, D. Avshalom-Gorni, Y. Gorin-Rosen, E.J. Stern, D. Syon and A. Tatcher. *Ḥorbat 'Uẓa; The 1991 Excavations* II: *The Late Periods* (IAA Reports 42). Jerusalem. Pp. 78–98.

Gorin-Rosen Y. 2012. Glass. In A. Abu Hamid. 'Akko, the Post Office. *HA–ESI* 124 (December 31). http://www.hadashot-esi.org.il/report_detail_eng.aspx?id=2199&mag_id=119 (accessed January 20, 2013).

Gorin-Rosen Y. 2021a. Glass Finds. In R. Lavi. Jerusalem, the Assyrian Monastery. *HA–ESI* 133 (January 24). http://www.hadashot-esi.org.il/Report_Detail_Eng.aspx?id=25884&mag_id=133 (accessed April 6, 2021).

Gorin-Rosen Y. 2021b. Glass Finds. In S. Weksler-Bdolah and A. Onn. *Jerusalem; Western Wall Plaza Excavations* III: *The Roman and Byzantine Periods. Small Finds from the Roman Refuse Dump and Other Contexts* (IAA Reports 67). Jerusalem. Pp. 27–67.

Gorin-Rosen Y. and Katsnelson N. 1999. The Glass Vessels. In Z. Yeivin and G. Finkielsztejn. Ḥorbat Castra—1993–1997. *HA–ESI* 109:27*.

Gorin-Rosen Y. and Katsnelson N. 2007. Local Glass Production in the Late Roman–Early Byzantine Periods in Light of the Glass Finds from Khirbat el-Ni‘ana. *‘Atiqot* 57:73–154.

Gorin-Rosen Y. and Winter T. 2022. The Glass Finds. In R. Avner. *The Kathisma Church and Monastery of Mary Theotokos on the Jerusalem–Bethlehem Road: Final Report of the 1992, 1997, 1999 and 2000 Excavation Seasons* (IAA Reports 69). Jerusalem. Pp. 229–260.

Grose D.F. 1979. The Syro-Palestinian Glass Industry in the Later Hellenistic Period. *Muse* 13:54–67.

Gutreich D. 2013. The Glass Finds. In D. Ben-Ami ed. *Jerusalem: Excavations in the Tyropoeon Valley (Giv‘ati Parking Lot)* I (IAA Reports 52). Jerusalem. Pp. 265–289.

Gutreich D. 2020. The Byzantine Glass. In D. Ben-Ami and Y. Tchekhanovets. *Jerusalem. Excavations in the Tyropoeon Valley (Giv‘ati Parking Lot)* II/1; *The Byzantine and Early Islamic Periods, Stratum V; The Byzantine Period* (IAA Reports 66/1). Pp. 201–218.

Israeli Y. 2005. The Glass Vessels from Ẓippori. In A. Druks. Late Roman-Period Burial Complex at Ẓippori. *‘Atiqot* 49:107*–111* (Hebrew; English summary, p. 142).

Israeli Y. 2008. The Glass Vessels. In J. Patrich. *Archaeological Excavations at Caesarea Maritima, Areas CC, KK and NN; Final Reports* I: *The Objects.* Jerusalem. Pp. 367–418.

Israeli Y. 2010. Glass Vessels. In H. Geva. *Jewish Quarter Excavations in the Old City of Jerusalem Conducted by Nahman Avigad, 1969–1982* IV: *The Burnt House of Area B and Other Studies; Final Report*. Jerusalem. Pp. 221–235.

Israeli Y. and Katsnelson N. 2006. Refuse of a Glass Workshop of the Second Temple Period from Area J. In H. Geva. *Jewish Quarter Excavations in the Old City of Jerusalem Conducted by Nahman Avigad, 1969–1982* III: *Area E and Other Studies; Final Report.* Jerusalem. Pp. 411–460.

Jackson-Tal R.E. 2004. The Late Hellenistic Glass Industry in Syro-Palestine: A Reappraisal. *JGS* 46:11–32.

Jackson-Tal R.E. 2007. Glass Vessels from En-Gedi. In Y. Hirschfeld. *En-Gedi Excavations* II: *Final Report (1996–2002).* Jerusalem. Pp. 474–506.

Jackson-Tal R.E. 2016. Miscellaneous Small Finds: Metal and Glass. In D. Syon. *Gamla* III/2: *The Shmarya Gutmann Excavations 1976–1989; Finds and Studies* (IAA Reports 59). Jerusalem. Pp. 191–212.

Jackson-Tal R.E. 2019. The Glass Finds. In I. Stern ed. *Excavations at Maresha Subterranean Complex 169: Final Report Seasons 2000–2016* (ANGSBA XI). Jerusalem. Pp. 235–262.

Kanyak S. 2009. Late Roman/Early Byzantine Window Glass from the Marmaray Rescue Excavations at Sirkeci, Istanbul. In E. Lafli ed. *Late Antique/Early Byzantine Glass in the Eastern Mediterranean (Conference Papers and Abstracts Presented at the International Colloquium "Late Antique Glass in Anatolia [4th to 8th cent. A.D.], in October 25–28, 2009 in Izmir, Turkey)* (Colloqvia Anatolica et Aegaea, Acta congressus communis omnium gentium Smyrnae II). Izmir. Pp. 25–47.

Katsnelson N. 2002. Excavations at Khirbet el-Shubeika: The Glass Ornaments. In Z. Gal ed. *Eretz Zafon: Studies in Galilean Archaeology.* Jerusalem. Pp. 322–331 (Hebrew; English summary, pp. 186*–187*).

Katsnelson N. 2009. Early Roman Glass Vessels from Judea—Locally Produced Glass? A Preliminary Report. *Annales du 17e Congrès de l'AIHV (Anvers, 2006).* Brussels. Pp. 163–169.

Nenna M.-D. 1999. *Les verres* (Exploration archéologique de Délos 37). Athens–Paris.

Spaer M. 2001. *Ancient Glass in the Israel Museum: Beads and Other Small Objects* (Israel Museum Catalogue 447). Jerusalem.

Szanton N. and Uziel J. This volume. A Byzantine and Early Islamic Building along the Southern Tyropoeon Valley.

Theophilus. *De diversis artibus* (C.R. Dodwell ed. and trans.). London–Edinburgh 1961.

Weinberg G.D. and Goldstein S.M. 1988. The Glass Vessels. In G.D. Weinberg ed. *Excavations at Jalame: Site of a Glass Factory in Late Roman Palestine*. Columbia, Mo. Pp. 38–102.

Weinberg S.S. 1988. A Syro-Palestinian Bowl Type. *Muse* 22:64–74.

Winter T. 1996. The Glass Vessels. In G. Avni and Z. Greenhut. *The Akeldama Tombs: Three Burial Caves in the Kidron Valley, Jerusalem* (IAA Reports 1). Jerusalem. Pp. 95–103.

Winter T. 2000. The Glass Vessels. In J. Seligman and R. Abu Raya. Dwelling Caves on the Mount of Olives (Eṭ-Ṭur). *'Atiqot* 40:132–133.

Winter T. 2019. *Lucid Transformations: The Byzantine–Islamic Transition as Reflected in Glass Assemblages from Jerusalem and Its Environs, 450–800 CE* (BAR Int. S. 2946). Oxford.

Winter T. 2020. Jerusalem, Ha-Nevi'im Street: The Glass Finds. *HA–ESI* 132 (August 10). http://www.hadashot-esi.org.il/images//JLM_Neviim-Glass.pdf (accessed April 6, 2021).