'Atiqot 113, 2023

Jewish Pilgrimage, Temple Sacrifices and 'Disposable' Cooking Pots

Omri Abadi[1]

From the time of Herod until the destruction of Jerusalem in 70 CE, there was a steady increase in the number of pilgrims in Jerusalem, reaching tens of thousands during each festival. Extensive supplies of ritually pure food prepared in pure cooking vessels were required for the pilgrims' sacrificial meals in the Temple and throughout the city. A large quantity of cooking pots had to be supplied within a short period of time, and these vessels were like 'disposable' cooking pots as they had to be broken at the end of the pilgrimage. In this paper, I suggest identifying the Jerusalem International Convention Center site (JICC, also designated Binyene Ha-Umma), located on the city's periphery, as the main production center for these cooking pots, the site expanding from the time of Herod onward to supply the needs of the thriving pilgrimage phenomenon. At the end of the pilgrimage events, some of these cooking pots were buried in an intentional manner in the city's waste disposal site on the eastern slope of the City of David hill.

Keywords: Second Temple period, Jerusalem, pilgrimage, cooking-pot production, ritual purity, ceremonial feasting

Introduction

During the late Second Temple period (late first century BCE to 70 CE), Jerusalem was a major pilgrimage center for Jews from Judea and the Diaspora who traveled long distances to offer sacrifices in the Temple and celebrate the festivals feasting with their families and friends in the city and the Temple precincts (Safrai 1965; Goodman 2007).[2] Pilgrimages

---

[1] Dr. Omri Abadi, post-doc fellow, the Roger and Susan Hertog Center for the Archaeological Study of Jerusalem and Judah, the Hebrew University of Jerusalem, and Israel Antiquities Authority.

[2] I am grateful to the Roger and Susan Hertog Center for the Archaeological Study of Jerusalem and Judah at The Hebrew University of Jerusalem for supporting this research. I wish to thank Dr. Ron Beeri and Dr. Danit Levi for granting permission to reproduce several excavation photographs from the JICC site. Finally, I appreciate the helpful feedback provided on earlier drafts by Prof. Uzi Leibner, Prof. Ze'ev Safrai and Tehillah Lieberman.

were undertaken all year round, peaking on the three major pilgrimage festivals, especially on Passover. According to Flavius Josephus (*Jewish War* 6, 420–427), and the Rabbinic literature (Tosefta, *Pesachim* 4:12, paralleled in BT, *Pesachim* 64b), vast quantities of sheep were sacrificed in the Temple and consumed in ritual feasting in Jerusalem. The year-round pilgrimage characterized Jerusalem's economy as a 'pilgrimage economy,' related specifically to this constant pilgrim activity.

Ritual feasting in Jerusalem revolved around the consumption of the sacrificial meat, requiring the diners to "eat in purity" by purifying themselves in a *miqweh* (plural: *miqwa'ot*; ritual purification bath), in order to partake of the sacrificial holy offerings (BT, *Hagigah* 2:6). All the food and beverages served at the meals, as well as the ovens, cooking and serving vessels used in their preparation, had to be ritually pure (Safrai 1965:186–187, 200–202). The many pilgrims and the central role of the purity laws in the Temple ritual in the late Second Temple period required a constant supply of pure food and vessels in Jerusalem.

Archaeological evidence of the substantial food supply for the pilgrims has been found in the abundant remains of animal bones in the city's refuse dumps, testifying to sheep flocks that were brought in for sacrifice from the Judean Desert region, south of the Hebron mountains, and from across the Jordan Valley (Hartman et al. 2013). *Miqwa'ot* located alongside wine and oil presses to ensure the pure state of the laborers, have been uncovered at many sites throughout Judea, providing evidence for the production of pure wine and olive oil (Adler 2008; Reich 2013:253–256; Abadi and Shepazer, forthcoming).

This article addresses evidence relating to the mass-production of ritually pure vessels that, in my opinion, were manufactured for the pilgrims to Jerusalem, and may be designated 'Temple-orientated production.' I propose that the cooking pots produced in the workshops uncovered at the Jerusalem International Convention Center excavation site (henceforth JICC) were specifically manufactured for the ritual requirements of the pilgrims. The unique profile of this workshop, consolidated by the evidence from the city refuse dumps, supports the understanding that these ceramic vessels played an integral role in the ritual feasting carried out in the Temple and throughout Jerusalem.

The Jerusalem Cooking-Vessel Repertoire

Cooking vessels were probably the most common ceramic vessels in Jerusalem in the Early Roman/late Second Temple period, specifically in the first century CE.[3] The most popular cooking vessel form was the closed globular cooking pot, characterized by a rounded base, short neck and wide mouth with triangular rim, and two handles extending from rim to shoulder (Figs. 1; 2:1; Geva and Rosenthal-Heginbottom 2003:180; Berlin 2005:36–37, 42, Figs. 4, 10; Geva 2010:125). These cooking pots usually had relatively thin walls and a

[3] The author wishes to express his gratitude to Tehillah Lieberman, Barak Monnickendman-Givon, Salome Dan-Goor and Yana Tchekhanovets, for alowing him to reprint here the illustrations of the cooking vessels from their excavation (see Fig. 2).

Fig. 1. Closed globular cooking pot (photography: D. Levi).

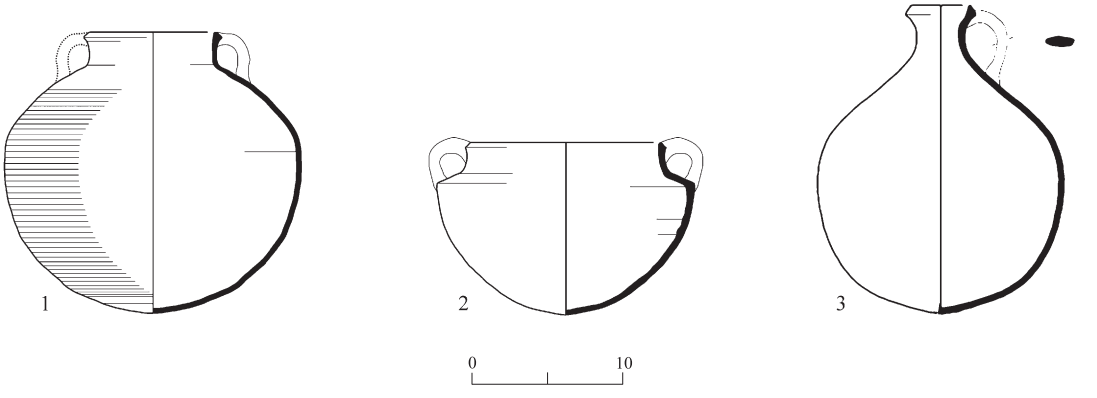

Fig. 2. Cooking vessel types in Early Roman Jerusalem: (1) closed globular cooking pot; (2) open cooking pot, or casserole; (3) cooking jug (after Lieberman, Monnickendam-Givon and Dan-Goor 2023: Fig. 8: 1, 6, 8).

reddish-brown hue; signs of burning were often found on the bottom of the pot, reflecting its use for cooking.

The two other cooking-vessel types were the open cooking pots and the cooking jugs. The open cooking pot, or casserole, had a semispherical body with a slightly pointed base, a sloping or centrally ridged shoulder, a short, straight or slightly inclined neck, a wide mouth with a triangular rim, and two handles extending from rim to shoulder (Fig. 2:2; Berlin 2005:39–41, Fig. 7; Bar-Nathan 2006:164, Type M-CS1A). The cooking jug featured a pear-shaped body, a constricted neck with a neat triangular rim, and a handle extending from rim to upper body; it was probably used for boiling liquids (Fig. 2:3; Berlin 2005:39, Fig. 6:1–4; Geva 2010:126, Pl. 4.5:15).

These cooking vessels, and specifically the globular cooking pots, constituted the most common ceramic vessel types uncovered in excavations in Jerusalem. Their relative quantity in Jerusalem's ceramic assemblages surpassed that of other settlement sites in Judea and throughout the country in the late Second Temple period (Lieberman, Monnickendam-Givon and Dan-Goor 2023). The closed and open cooking pots may possibly be identified

with the ceramic vessels designated in the Mishnah קדרה (*kedera*) (e.g., *Tevul Yom* 2:2; *Makkot* 4:8; 5:11; *Ohalot* 5:2; *Kelim* 7:1).[4]

The Purity Status of Ceramic Vessels

On the understanding that the cooking pots were intended for preparing and cooking sacrificial meat and ceremonial meals in Jerusalem, it can be assumed that their production was not subject to the standard manufacturing process used for everyday cooking pots but was rather a distinct manufacturing process characterized by meticulous emphasis on the purity of the vessels, distancing them from contact with impure or suspectedly impure bodies. The reason behind the emphasis on the purity of ceramic vessels stems from the biblical injunction that earthenware vessels are susceptible to impurity that cannot be rectified by immersion in a *miqweh*, but only by breaking them (Leviticus 11:33; Sifra, *Shemini* 7:13; Tosefta, *Kelim-Bava Kamma* 7:14). In this context, an impure ceramic vessel could not be used for ritual meals in Jerusalem, which were only consumed from pure vessels. The impurity of ceramic vessels, like vessels made of other materials, such as wood or metal, was imparted through contact with some form of impurity, such as a corpse or an insect swarm. However, unlike other vessels, ceramic vessels only became impure from the interior of the vessel and not from the exterior (Leviticus 11:33; Mishna, *Kelim* 2:1; Tosefta, *Hulin* 1:12).[5] Thus, impure contact with the exterior surface did not render the vessel impure, but if the interior was contaminated, the vessel itself became impure (Mishnah, *Kelim* 2:1).[6]

When a ceramic vessel was still in the production process, it was not susceptible to impurity, as it was not yet a usable utensil; only once it was finished, on removal from the firing kiln, it was susceptible to impurity: "From when do earthenware vessels become susceptible to impurity? As soon as they are baked in the kiln, this being the completion of their manufacture" (Mishnah, *Kelim* 4:4; for another perspective, see Tosefta, *Kelim* 2:6). Consequently, vessels crafted for the purpose of cooking sacrificial food had to be removed from the kiln by a ritually pure person.

---

[4] David Adan-Bayewitz (1993:40) considered that this term refers specifically to the closed pot.

[5] It should be noted that according to biblical law only ceramic vessels that come in contact with an insect swarm or a *zav* (a person with a certain type of impurity) falling into them become impure and require breakage (*Leviticus* 11:33; 15:12). The testimony in the Temple Scroll adds the case of impurity from a corpse to the laws of ceramic-vessel impurity (11QT [11Q19] L:17–19). However, in the later rabbinic sources, all types of impurity render a ceramic vessel impure, as stated: "There is no purification for a ceramic vessel except by breaking it" (Tosefta, *Kelim-Bava Kamma* 7:14).

[6] The concern that cooking pots might become impure led to the situation that if a potter left the pots unattended for a brief moment, some were already rendered impure. For instance, Tannaite sources, such as Mishnah *Taharot* 9:1, and its exegesis in BT, *Ketubot* 24b, discuss this situation, emphasizing that the impurity of the utensils arises as they were placed near a public area, and people considered ritually impure might brush against the pots or touch the air space above the pots, thereby contaminating them. Similar discussions are found in Mishnah *Taharot* 7:5 and *Oholot* 16:2.

Legal Issues Concerning Ceramic Vessels Used for Sacrificial Meals

The quantity of cooking vessels required for the pilgrimage festivals in Jerusalem was substantial, due both to the large numbers of pilgrims from afar, who acquired utensils for preparing sacrifices and other meals in the city, and also to the specific regulations associated with cooking the offerings, rendering the vessels 'ancient disposable vessels.'

Following the sacrificial meal, the participants were required to take steps regarding the leftovers and the vessels. According to the biblical injunctions, the leftover sacrificial meat had to be consumed or disposed of within a specific timeframe, from one night to two days (Leviticus 19:6; Mishnah, *Zevachim* 5:7–8), and the earthenware vessels used to prepare the offerings had to be shattered: "And the earthen vessel wherein it is soddened, shall be broken" (Leviticus 6:21). The time limit for breaking the ceramic vessels was debated by the Sages, either by the end of the period defined for consuming the offering, or by the end of the pilgrimage festivities, before the leavened bread was removed and people left the city (see Sifra, *Tzav* 7:2). It is noteworthy that a thorough cleaning and rinsing procedure sufficed for metal vessels used for cooking the offerings (Leviticus 6:21).[7]

Most of the pilgrims undertook a long journey to reach Jerusalem, as indicated by historic evidence (Philo, *On Providence,* 2, 64; Josephus, *Antiquities* 17, 312– 313; *Acts* 2:9–11; 6:9), and they probably did not bring cooking and serving utensils from home, but rather purchased these items in the Jerusalem markets. Since ceramic vessels were much cheaper and lighter than metal ones, and they were simply broken and discarded after use, it is reasonable to assume that most of the pilgrims acquired these ceramic vessels in Jerusalem.

In light of the large number of participants in the pilgrimage events, it is reasonable to expect that, if the pilgrims used and subsequently shattered and discarded the 'disposable' ceramic vessels, there should be significant archaeological evidence throughout the city testifying to this practice, an assertion previously highlighted by Reich (2014). Indeed, this fingerprint is particularly evident in the refuse deposits on the eastern slope of the Temple Mount and the City of David hill (called also the Lower City), where substantial quantities of broken cooking pots were found, alongside smaller quantities of other ceramic vessels (Bar-Oz et al. 2007; Machline and Gadot 2017; Reich and Shukron 2021). In addition, disused water cisterns were found to contain cooking pots, some shattered and others punctured or with other surface damage (Grossberg 2002; Reich 2014; Reich and Shukron 2021:684–686; Lieberman, Monnickendam-Givon and Dan-Goor 2023).

Reich and Shukron (2003), and Bar-Oz and other scholars (Bar-Oz et al. 2007) linked the phenomena in the refuse dumps and disused cisterns to the activity of the pilgrims, both

7 Metal vessels for cooking are rarely uncovered in archaeological excavations: one was found at Qumran (Ganor and Peleg 2008) and another, in a cave north of Qumran (unpublished; Gutfeld, pers. comm.). Metal vessels were uncommon in Jerusalem, probably as they were melted for recycling, while ceramic vessels were more accessible and affordable, thus preferred by the pilgrims.

cases seeming to reflect the burying or interring of the ceramic vessels that were used in the festive meals; these vessels were damaged or entirely broken before burial, in accordance with the biblical injunction.

'Trustworthy' Production Centers of Pure Cooking Vessels

Ritually pure ceramic vessels for sacrificial meals could only be acquired from places considered trustworthy regarding their purity. The Jerusalem markets were naturally trustworthy in this respect (BT, *Hagigah* 6a), but pottery production took place outside the city,[8] and the purity of the vessels depended on various parameters, including the vessel type, the distance from the city and the date of purchase. Vendors of 'sacrificial cooking pots' were considered trustworthy year-round, specifically those located within the radius between Jerusalem and Modi'in: "From Modi'in inward (closer to Jerusalem), [all the potters] were trusted regarding thin-walled pottery vessels for sacrificial purposes; from Modi'in outward, they are not trusted" (Tosefta, *Hagigah* 3:11).[9]

The geographical definition of the trustworthy areas "from Modi'in inward" may possibly be reflected in the archaeological findings (Fig. 3). A research project on cooking pots retrieved from sites around the area of modern-day Modi'im, undertaken by Shulamit Terem and other researchers (pers. comm.), has led to the understanding that this area was a meeting-point for two major pottery-production centers, one in the hilly region and the other in the coastal plain. This research may shed light on the complexity of the ceramic vessels found in the vicinity of Modi'in, the pottery sellers mixing their goods, as they supplied vessels from the hilly region, which were considered pure, and vessels from the coastal plain, considered impure.

Since the vessels in the Jerusalem markets were purchased by the pilgrims for sacrificing and cooking in the Temple precincts, the pottery-production system had to be oriented primarily to the pilgrims' requirements. One would therefore expect to find large-scale

---

[8] "Rabbi Nathan asserts that (pottery) kilns must be situated at a distance of fifty cubits from the city" (Tosefta, *Bava Batra* 1:10; BT, *Hagigah* 26a). This condition is corroborated by archaeological evidence, as, despite extensive excavations, no traces of Second Temple period pottery workshops have been unearthed within the city (Levi and Be'eri 2017; Be'eri and Levi 2018). On a practical level, the presence of kilns within a bustling metropolitan and tourist-oriented pilgrimage center would have posed environmental and sanitation problems.

[9] I quote the Tosefta, as it is a more nuanced version of Mishna, *Hagigah* 3:5. The category of 'thin-walled' (דקים) vessels relates to items with a thin construction, particularly focusing on cooking pots (*Kelim* 2:2; Sifra, *Shemini* 7:2; JT, *Hagigah* 3:1; BT, *Hagigah* 26a; BT, *Pesachim* 93b). According to the Rabbinic sources, pure cooking pots could be purchased year-round in the area from Modi'in inward. Regarding the category of 'coarse-walled' (גסים) vessels, this primarily refers to storage jars, '*Ḥavit*' (חבית) in rabbinic terminology. Pure storage jars could be purchased throughout Judea (including beyond Modi'in), but not all year round; only "seventy days before the season of wine and olive oil production" (Tosefta, *Hagigah* 3:11). Regarding the use of Mishnah *Hagigah* and the Tosefta for studying the earlier *halakhic* practices from the time of the Temple, there are numerous substantial references, and it is widely accepted in research to view them as remnants of early *halakhic* practices from the time of the Temple (see Epstein 1957:49–51).

Fig. 3. Map of the 'trustworthy' area for manufacturing pure cooking vessels between Jerusalem and Modi'in, showing the location of the JICC site (map: A. Shapiro).

production centers around the city, capable of supplying a large quantity of vessels in Jerusalem, specifically during peak events, namely, the three pilgrimage festivals, whilst adhering to the stringent standards of purity.

The Jerusalem International Convention Center Workshop Site

The Jerusalem International Convention Center site (JICC, also designated Binyene Ha-Umma) is located on the western side of present-day Jerusalem, about 2–3 km west of ancient Jerusalem, along the ancient approach road from the west. A unique industrial-scale pottery workshop was discovered in salvage excavations conducted in 1949 and 1968 and resumed in the 1990s and 2000s.[10] The site, spanning an area of about 170 dunams,

[10] See Avi-Yonah 1949; 1968; Arubas and Goldfus 2005; Beeri and Levi 2011; for a review of the excavation history at the site, see Be'eri and Levi 2018.

exposed a small Jewish village and a large industrial center primarily engaged in pottery production. This site was the largest and most developed pottery workshop site excavated around Jerusalem.[11]

The industrial activity began during the Hasmonean period and continued after the destruction of Jerusalem in 70 CE, and even later, in the second century CE, when the Tenth Roman Legion reutilized the production center, establishing a new workshop within the JICC area. The peak period of activity was in the Early Roman period (Layers VI–VII, 37 BCE–70 CE), when various production facilities for the different stages of pottery manufacture were revealed (Cohen-Weinberger, Levi and Be'eri 2020:383). The distribution of these facilities in the JICC area, and further west toward the Giv'at Ram area, exposed the presence of at least eight separate production units with similar components, each unit comprising an underground water reservoir, a stepped settling-pool system for clay filtration, mixing and settling, a firing kiln (Fig. 4), a *miqweh*, and storage rooms for the finished vessels. Concentrations of raw material and refuse pits containing thousands of broken pottery vessels damaged in the firing process were found adjacent to the installations (Beeri and Levi 2011; Be'eri and Levi 2018:18).

The initial on-site production of vessels began in the Hasmonean period, around the mid-second century BCE, producing a wide variety of items, including flasks for liquid storage and cooking pots. During the Early Roman period, the industrial area expanded significantly, now specializing in the production of cooking vessels (Be'eri and Levi 2018). The cooking-vessel production was so extensive that in the 2009–2011 excavations carried out at the site (the Crown Plaza Hotel parking lot, now the VERT Jerusalem Hotel), it was calculated that cooking-vessel sherds constituted c. 96% of the entire Early Roman pottery assemblage (Be'eri and Levi 2018:19). After 70 CE, during the period between the two Jewish revolts, the pottery workshop continued to operate, and in addition to the cooking vessels, the production expanded to include other pottery vessels. When the site was transformed into the manufacturing center of the Tenth Legion in the second century CE, bricks, pipes and tiles, as well as cooking vessels, were manufactured (Be'eri and Levi 2018; Cohen-Weinberger Levi and Be'eri 2020).

At least four *miqwa'ot*, ritual purification pools, dating to the Early Roman period were discovered at the site, most situated adjacent to a firing kiln or within the pottery workshop complex, often accompanied by a cistern (Fig. 5; Arubas and Goldfus 2005: Fig.

[11] Other pottery production sites include a pottery kiln dating to the first century BCE excavated at the Giv'at Ha-Mivtar junction, revealing remains of cooking vessels, storage jars and serving dishes (Abu Raya 1997), and a site at Ḥorbat Ha-Moẓa where evidence of an Early Roman pottery workshop for flasks was exposed (Billig 1996). In addition, a sizeable pottery workshop was surveyed at Ras al-Ram, c. 6 km northwest of ancient Jerusalem and about 3.5 km west of the JICC; although not excavated, the survey retrieved significant pottery-production remains, but no cooking vessels.

Fig. 4. Early Roman-period pottery kiln at the JICC site (photography: D. Levi).

1: Sqs F-G/19-20, Sqs G-H/24; Be'eri and Levi 2018:19; Adler, forthcoming).[12] Elaborate, stepped water installations were exposed in all the excavation seasons at the site, but in the earlier excavations, they were not yet identified as *miqwa'ot* (Avi-Yonah 1949; 1968). In the excavations conducted by Arubas and Goldfus, the excavators tentatively identified the installations as *miqwa'ot* (Arubas and Goldfus 2005:112–113), but in the more recent excavations by Beeri and Levi, these installations were unequivocally identified as such (Adler 2011:131–134, Table 1; forthcoming). Although numerous *miqwa'ot* have been found in Jerusalem and Judea, the JICC examples are among the few associated with industrial pottery production.[13]

The location of the *miqwa'ot* and the Mishnaic source (*Kelim* 4:4; see above) indicate that immersion in the ritual bath was intended to render the potters ritually pure before removing the pure vessels from the kiln. It seems that maintaining the pure state of the

[12] The phenomenon of water cisterns alongside *miqwa'ot* was identified by Reich (2013:43-44), who proposed that these were water facilities used to replenish the *miqwa'ot* during the dry seasons, when the water level in the *miqwa'ot* lowered and dried up.

[13] Recently, small village pottery workshops with adjacent *miqwa'ot* have been discovered, examples including Ḥorvat Bir el-Duwali, near Beituniya (Hizmi 2011), and at the village of Mar (Bet-El) (Yevgeni Aharonovich pers. comm.), as well as findings in Qumran (Magen and Peleg 2008) and Hebron (Ben-Shlomo 2018). For discussions on *miqwa'ot* near pottery workshops, see Adler 2011; forthcoming; Ben-Shlomo 2017.

Fig. 5. Early Roman-Period *miqweh* at the JICC site (photography: D. Levi).

pottery workers was deliberately geared to the production of a large quantity of pure pottery vessels for the intended customers.

The meticulous focus on the purity of the pottery vessels in the mass production was a unique phenomenon, indicating that the production of pure cooking vessels was not only intended for individual consumers who were accustomed to eat all meals in a state of purity, such as the *Ḥaverim* mentioned in Rabbinic literature.[14] It was rather an extensive industrial production aimed at a large and diverse clientele, who required pure vessels. It can therefore be suggested that these pure cooking vessels were marketed to the consumer sector, mostly comprising pilgrims to Jerusalem, who probably used these vessels for cooking and serving sacrificial meat during the ceremonial feasting in the Temple and throughout the city. The Early Roman-period pottery production at the JICC site was thus a Temple- or pilgrimage-oriented industry.

[14] The possibility that there were pottery workshops with *miqwa'ot* that produced pure pottery vessels for *Ḥaverim* should not be discounted. It is possible that the JICC pottery workshop could have potentially served this purpose. However, in my opinion, this was not the primary reason for the establishment of this large industrial area.

Discussion

The large-scale influx of pilgrims to Jerusalem during the three pilgrimage festivals, estimated at tens of thousands, and up to three times the city's population (Haber 2011), required a considerable number of cooking vessels. The demand for these vessels was huge, since many of the vessels were used to cook sacrificial meals during the festive gatherings, and, in alignment with the biblical injunction, they were broken and discarded after a single use. This necessitated a constant supply of new pure vessels throughout the year, especially during the pilgrimage peak times. Even when the cooking vessels were not used for sacrificial purposes, it is reasonable to assume that pilgrims preferred to purchase the vessels in Jerusalem and discard them on departure, rather than carry them on the long journey home.

The JICC pottery workshop responded to the high demand from the pilgrims. The widespread distribution of their cooking vessels found throughout Jerusalem, in houses, streets and refuse dumps, may provide the strongest evidence that the JICC pottery workshop was intended to serve the needs of the many pilgrims who visited the city. This observation permits a deeper understanding of the extent of the pilgrimage phenomenon in Jerusalem, and the logistic and industrial infrastructure behind the mass celebrations in the city during the three pilgrimage festivals. Furthermore, this perspective emphasizes the significance of the JICC pottery workshop as a pivotal hub catering for the religious and practical needs of the pilgrims, and sheds light on the socio-economic dynamics of ancient Jerusalem during the sacred festivals.

References

Abu Raya R. 1997. Jerusalem, Giv'at Ha-Mivtar. *ESI* 16:100.

Adan-Bayewitz, D. 1993. *Common Pottery in Roman Galilee: A Study of Local Trade*. Ramat Gan.

Adler Y. 2008. Second Temple Period Ritual Baths adjacent to Agricultural Installations: The Archaeological Evidence in Light of the Halakhic Sources. *JJS* 59:62–72.

Adler Y. 2011. *The Archaeology of Purity: Archaeological Evidence for the Observance of Ritual Purity in Eretz-Israel from the Hasmonean Period until the End of the Talmudic Era (164 BCE–400 CE)*. Ph.D. diss. Bar Ilan University. Ramat Gan (Hebrew; English summary, pp. i–iii).

Adler Y. Forthcoming. The Miqwa'ot. In R. Beeri and D. Levi. *Jerusaleem, Excavations at the International Convention Center (Binyene Ha-Umma—Crowne Plaza Hotel) 2009–2010* I (IAA Reports). Jerusalem.

Arubas B. and Goldfus H. eds. 2005. *Excavations on the Site of the Jerusalem International Convention Center (Binyanei Ha'uma): A Settlement of the Late First to Second Temple Period,*

the Tenth Legion's Kilnworks, and a Byzantine Monastic Complex; The Pottery and Other Small Finds (*JRA* Suppl. S. 60). Portsmouth, R.I.

Avi-Yonah M. 1949. Excavations at Sheikh Bader, Jerusalem (1949). *BJPES* 15:19–24 (Hebrew; English summary, p. II).

Avi-Yonah M. 1968. Jerusalem—Giv'at Ram (Convention Center). *IEJ* 18:196–197.

Bar-Oz G., Bouchnik R., Weiss E., Weissbrod L., Bar-Yosef Mayer D.E. and Reich R. 2007. "Holy Garbage": A Quantitative Study of the City-Dump of Early Roman Jerusalem. *Levant* 39:1–12.

Beeri R. and Levi (Levy) D. 2011. Roman Period Workshops at the Crowne Plaza Hotel in Western Jerusalem. *Qadmoniot* 141:35–39 (Hebrew).

Be'eri R. and Levi D. 2018. Pottery Production in Jerusalem in the Second Temple Period until the Second Jewish Revolt in Light of the Crowne Plaza Hotel and Jerusalem International Convention Center Excavations. *Cathedra* 168:7–38 (Hebrew; English summary, p. 213).

Berlin A. 2005. Pottery and Pottery Production in the Second Temple Period. In B. Arubas and H. Goldfus eds. *Excavations on the Site of the Jerusalem International Convention Center (Binyanei Ha'uma): A Settlement of the Late First to Second Temple Period, the Tenth Legion's Kilnworks, and a Byzantine Monastic Complex; The Pottery and Other Small Finds* (*JRA* Suppl. S. 60). Portsmouth, R.I. Pp. 29–60.

Ben-Shlomo D. 2018. A New Type of Ritual Bath in Judea? In *Proceedings of the 10th International Congress on the Archaeology of the Ancient Near East, 25−29 April, Vienna*. Wiesbaden. Pp. 185–194. https://doi.org/10.2307/J.CTVCM4F86.19

Billig Y. 1996. Ḥorvat Hamoẓa. *ESI* 15:81–82.

Cohen-Weinberger A., Levi D. and Be'eri R. 2020. On the Raw Materials in the Ceramic Workshops of Jerusalem, before and after 70 CE. *BASOR* 383:33–59.

Dan-Goor S. and Tchekhanovets Y. 2020. Jerusalem, Ma'alot 'Ir David Street. *HA–ESI* 132 (January 20). http://www.hadashot-esi.org.il/Report_Detail_Eng.aspx?id=25690&mag_id=128 (accessed November 15, 2023)

Epstein J.N. 1957. *Introduction to Tannaitic Literature: Mishna, Tosephta and Halakhic Midrashim*. Jerusalem (Hebrew).

Geva. H. 2010. *Jewish Quarter Excavations in the Old City of Jerusalem Conducted by Nahman Avigad, 1969–1982* IV: *The Burnt House of Area B and Other Studies; Final Report*. Jerusalem.

Geva H. and Rosenthal-Heginbottom R. 2003. Local Pottery from Area A. In H. Geva. *Jewish Quarter Excavations in the Old City of Jerusalem Conducted by Nahman Avigad, 1969–1982* II: *The Finds from Areas A, W and X-2; Final Report.* Jerusalem. Pp. 176–191, 232−255.

Goodman M. 2007. The Pilgrimage Economy of Jerusalem in the Second Temple Period. In M. Goodman ed. *Judaism in the Roman World: Collected Essays*. Leiden–Boston. Pp. 59–67.

Grossberg A. 2002. Cooking Pots with Holes Found in Jerusalem and the Customs of Haverim and Amei ha-Aretz. In E. Baruch and A. Faust eds. *New Studies on Jerusalem* 8 *(Proceedings of the Eighth Conference, December 26th 2002, Bar-Ilan University).* Ramat Gan. Pp. 59–71 (Hebrew; English summary, p. 11*).

Haber S. 2011. Going Up to Jerusalem: Pilgrimage, Purity, and the Historical Jesus. In P.A. Harland ed. *Travel and Religion in Antiquity* (Studies in Christianity and Judaism 21). Waterloo, Ont. Pp. 49–67.

Hartman G., Bar-Oz G., Bouchnick R. and Reich R. 2013. The Pilgrimage Economy of Early Roman Jerusalem (1st century BCE–70 CE) Reconstructed from the δ15N and δ13C Values of Goat and Sheep Remains. *JAS* 40:4369–4376.

Hizmi H. 2011. Bir ed-Duwali: A Jewish Village of the Second Temple Period in the Land of Benjamin. *Qadmoniot* 142:88–94 (Hebrew).

Levi D. and Be'eri R. 2017. The Potter's Workshops at Binyané Ha-'Umma as a Tool for Understanding Historical and Cultural Changes in Jerusalem from the Second Century BCE to the Second Century CE. In Y. Gadot, Y. Zelinger, K. Cytryn-Silverman and J. Uziel eds. *New Studies in the Archaeology of Jerusalem and Its Region. Collected Papers* XI. Jerusalem. Pp. 124–143 (Hebrew).

Lieberman T., Monnickendam-Givon B. and Dan-Goor S. 2023. Lots of Pots: Cooking-Pot Deposits in Early Roman Jerusalem. *'Atiqo*t 112:93–115.

Machline H. and Gadot Y. 2017. Wading Through Jerusalem's Garbage: Chronology, Function, and Formation Process of the Pottery Assemblage of the City's Early Roman Landfill. *Journal of Hellenistic Pottery and Material Culture* 2:102–139.

Magen Y. and Peleg Y. 2008. The Qumran Excavations 1993–2004: Preliminary Report. In Y. Magen. *Judea and Samaria Researches and Discoveries* (*JSP* 6). Jerusalem. Pp. 353–426.

Reich R. 2013. *Miqwa'ot (Jewish Ritual Baths) in the Second Temple, Mishnaic and Talmudic Periods.* Jerusalem (Hebrew).

Reich R. 2014. On the Spatial Distribution of Cooking Pots in Jerusalem of the Late Second Temple Period and Its Significance. In E. Baruch and A. Faust eds. *New Studies on Jerusalem* 20 *(Proceedings of the Twentieth Conference, December 25th 2014, Bar-Ilan University).* Ramat Gan. Pp. 211–217 (Hebrew; English summary, p. 48*).

Reich R. and Shukron E. 2021. *Excavations in the City of David, Jerusalem (1995–2010): Areas A, J, F, H, D and L. Final Report* (Ancient Jerusalem Publications I). University Park, Pa.

Safrai S. 1965. *Pilgrimage at the Time of the Second Temple*. Jerusalem (Hebrew).