'Atiqot 114, 2024

Iron Age II and Persian-Period Wine Production in Southern Samaria: New Data from Archaeological Surveys

Aharon Tavger[1]

New evidence for Iron Age II and Persian-Period wine production in southern Samaria, including many winepresses and bell-shaped winery pits, has recently come to light, expanding our knowledge and revising some of our understandings concerning this phenomenon. While it was widely accepted that industrial wine production during these periods was confined to central Judah, in Jerusalem's environs, it is now clear that wine was also produced throughout the southern Samaria region, particularly on the desert fringes. Some of these wine-production sites seemingly functioned already during Iron Age IIB, under Northern Kingdom control, while some of the sites also operated under Assyrian control following the conquest of Samaria, and even continued under the Persian administration.

Keywords: Iron Age, Persian period, winepress, winery, Samaria, Assyrian conquest, Northern Kingdom, ancient economy, agricultural specialization, landscape archaeology

Introduction: Iron Age II Wine Production in the Southern Levant

Ancient vineyards found throughout the Southern Levantine highlands bear witness to the continued practice of their cultivation through the ages. Precipitation of more than 500 mm per year, low temperatures in the winter season, hot summers with cold nights, and the natural terrace systems on the steep slopes—all served as a perfect platform for the groves in the hilly regions (see, e.g., Lipschits 1987).[2] Moreover, the common use of wine promoted its widespread consumption, bringing about a significant increase in the creation of production installations (Dayagi-Mendels 1999; Frankel 1999).

---

[1] Dr. Aharon Tavger, The Hebrew University of Jerusalem, Jerusalem, and Ariel University, Ariel.

[2] It should be noted that although the climate has changed throughout the eras, the estimated Iron II precipitation is quite similar to that of modern times (see, e.g., Orland et al. 2009; Langgut et al. 2015; Morin et al. 2019).

The first stage of wine production is crushing the grapes, usually done by stepping on them while laying on flat treading surfaces in winepresses, and more rarely, by employing stones, beams or weights (for more on wine production techniques, see, e.g., Frankel 1999:41–43, 51–59, 139–154). While winepresses were probably quite common in the Iron Age, they have received only sparse scholarly attention over the past few decades. One of the main issues complicating the study of these installations concerns their chronological association. As most presses have been identified only in surveys, not in stratified excavations, they may belong to any of the surveyed site's habitation layers. Furthermore, even when found in archaeological excavations, it has proven difficult to date the installations based on associated artifacts. Hence, they tend to lack definitive stratigraphic affiliation.

That said, a few significant past studies sought to characterize and thus create a chronological winepress typology (e.g., Frankel 1999; Hadas 2008; Wolff 2023). According to these studies, a rough distinction between those successfully dated to the Iron Age, versus those whose context positively dated them to the Hellenistic and Roman periods, indicates that Iron Age treading surfaces were simpler and shallower, while in later periods they were deeper and hewn far more meticulously.[3]

In addition to the simple treading surfaces, beam-and-weight presses are also known from the archaeological record. These presses are complex installations, sometimes containing several treading surfaces on an upper level and a set of sedimentation and collecting vats on the lower level (see, e.g., Hadas 2008:158–159). Hirschfeld (1983) previously dated such complex presses as only beginning from the Hellenistic period and onward, but in recent decades, such installations have also been found in clear Iron Age contexts. The main characteristic of Iron II treading floors is their simple, rounded and irregular shape, compared to the careful quarrying with straight lines and great refinement in the later period presses. Examples of Iron II complex presses have been found in recent years in Jerusalem's environs. At Beit Ṣafafa, an Iron IIB–C winepress was revealed with four treading surfaces arranged around a large collecting pit, surrounded by channels and other installations (Feig 2003). A more complicated winepress was excavated at Rogem Ganim, under the tumulus (Greenberg and Cinnamon 2011), comprising at least eight treading surfaces arranged in four terraces, one beneath the other, oval filter pits, several rock-cut depressions and square collecting pits. The rich pottery assemblage retrieved from inside the Rogem Ganim winepress and a nearby winery (see below) dates this complex's activity to Iron IIC and the Persian period (Greenberg and Cinnamon 2006).

[3] In this regard, it is worth noting the series of wine-production facilities uncovered in the 2012–2013 Tel Jezreel excavations, dated by the excavators to Iron Age II (Franklin et al. 2020). The complex includes a square wine cellar with two square collecting pits, a round pit and dozens of rock-cut depressions. Franklin believed that this compound should be dated to Iron Age II due to various parallels, mainly from Samaria. However, the treading surface's large dimensions and the careful quarrying might suggest later periods, which were present in the site's archaeological record (Ebeling, Franklin and Cipin 2012) and also indicated by Carbon-14 dating of the winepress's plaster (Franklin et al. 2020:74–75).

In the next stage, after treading on the grapes, the extracted juice began a process of fermentation. The initial fermentation was apparently occurring within the winepresses (e.g., Dayagi-Mendels 1999:30; Hadas 2008), but the main procedure took place in jars at the wineries. Dating wineries to Iron II was enabled following the excavations at el-Jib, biblical Giv‘on (Gibeon), during the 1950s and 1960s, where 63 pits were found side by side. The excavator determined these to constitute an underground winery (Pritchard 1964).[4] These are bell-shaped pits cut on average to a depth of about 2 m, with no plaster remains. The pit opening's diameters vary between 0.45 and 0.9 m. In some pits, a carved frame is recognizable around the original opening, designed to receive a stone closing lid. The pottery from the Giv‘on pits was dated by Pritchard to the end of Iron II, or to the Persian period, according to others (e.g., Wright 1963; Amiran 1975; Stern 1982:133–136). Nevertheless, it has been generally agreed that the pits were hewn out sometime during Iron II (Katz 2008a:174–175). Similar pits, dating to late Iron I and early Iron II, were also exposed at Samaria (Stager 1990; Franklin 2004:191–194), Tell el-Ful (Albright 1924:5),[5] Tell Beit Mirsim (Albright 1943:63–64),[6] Tell en-Nasbeh (Zorn 1993:1168; Tavger 2018:118), Khirbat Jama‘in (Dar 1980:99–100), Rogem Ganim (Greenberg and Cinamon 2011:84), Khirbat el-Burj (De Groot and Weinberger-Stern 2013)[7] and Tel Jezreel (Franklin et al. 2020).

One methodological note is required: although Pritchard's interpretation of this kind of pits as wineries was well-accepted, some of the cisterns may have been used to store other agricultural produce, not necessarily wine. Stager (1990:97–98) claimed that the bell-shaped pits discovered in the city of Samaria were intended to store oil, as several of them

[4] The identification of these pits as a winery came to Pritchard's mind due to finding inscribed jar handles inside the nearby water system, which he believed represented wine shipments from the surrounding region (Pritchard 1959). In addition, Pritchard conducted experiments regarding the pits' suitability for storing wine. In one experiment, a pit was filled with water. After four days, all the water seeped into the ground. In another experiment, water remained in a plastered pit for several days and at a temperature remaining around 16°C, an ideal temperature for wine preservation and aging (Pritchard 1960). The final process of wine aging is a long process requiring a uniform and cool temperature, so as not to damage the organic process that occurs in the wine. Even at the end of the process, the storage jars must be carefully kept in spaces with a controlled and stable temperature (see, e.g., Dayagi-Mendels 1999:23–24; Frankel 1999:41–43; Franklin et al. 2020:70–71).

[5] It should be noted that in the Tell el-Ful final report, Nancy Lapp questioned the date and the identification of these bell-shaped cisterns as Iron II wineries (Lapp 1981:61–62), as she did regarding the Giv‘on pits. Lapp claimed that these were primarily Iron I storage pits, with only a few hewn during Iron II. However, analysis of the archaeological finds from these two sites, along with other sites, suggests sustaining their initial interpretation as Iron II wineries (see Tavger 2018:416–421).

[6] William F. Albright believed that Tell Beit Mirsim's pits were used as water cisterns. However, these pits differ from water cisterns in several ways: the pits are usually not plastered; they are considerably smaller; their openings were sealed by a stone lid laid into an artificial depression, a form that is not recognized in water cisterns since there was no need to hermetically close the cisterns; and several pits are located in close proximity to each other, as opposed to one large water cistern.

[7] At Khirbat el-Burj, many seal impressions were also found on jar handles, of types known in the eighth and sixth centuries BCE, from which the excavators concluded that it was a site of royal industrial wine production.

were found near Iron Age olive presses. Franklin (2018) reviewed the use of bell-shaped pits throughout the Levant and beyond, and claimed that they were also used as silos for grain storage. In seeking to differentiate between "regular" bell-shaped storage pits and those used in the wine-production process, I hereby propose to treat only adjacent clusters of pits (at least five) as wineries, and individual ones, as storage pits. In addition, it can be hypothesized that storage pits would be located within a site's residential area, next to dwellings, while a cluster of pits located outside that area should be understood as part of the industrial area, in this case the wine-production industry (see Tavger 2018:418).

In the following pages, I wish to present new data concerning the winepresses and bell-shaped wineries from the southern Samaria region that should be dated to Iron II. Archaeological excavations in this area, north of the Benjamin region and south of the Shekhem syncline, has focused primarily on the three major sites of Shillo (Shiloh), Bet El (Bethel) and Khirbat Marjameh, with an additional small number of Iron II rural sites excavated over the years. Therefore, the most relevant archaeological data derives from the methodological archaeological surveys, which identified hundreds of sites with evidence of an Iron II occupation (for a history of southern Samaria archaeological research, see Tavger 2018:8–12).

In the last decade, a new regional survey project of southern Samaria has been conducted, wherein many Iron II sites were revisited and documented.[8] Besides pottery collection, as in the previous surveys, this recent high-resolution survey managed to document many features, structures, caves and agricultural installations. Dozens of Iron II winepresses and wineries were found for the first time, prompting a new winepress distribution study (Tavger 2018:413–421). This new data expands the corpus of Iron II wine production sites in the Southern Levant, and sheds new light concerning viniculture in this region.

Winepresses in Southern Samaria (Fig. 1; Appendix 1)

Most of the winepresses found at sites in southern Samaria are of the simple treading surface type. Although their simple plan suggests an Iron II date, it must be considered that the exact dating is problematic, and that some of them may have been used or hewn in later periods. However, since some winepresses were found in single-period sites, clearly dated to Iron II, they can serve as archetypes of southern Samarian winepresses in this period.

One of the first sites where Iron II winepresses were exposed is Tell en-Nasbeh in northern Judah, bordering southern Samaria on the south. Two rectangular winepresses were published by the excavators, and an additional one was recognized decades later

[8] The New South Samaria Survey (NSSS) project was carried out between 2014–2018, directed by the author, together with Dvir Raviv, Binyamin Har-Even and Evgeny Aharonovich, on behalf of the Archaeology Institutes at Ariel and Bar-Ilan Universities and the Civil Administration of Judea and Samaria (License Nos. 03–02–14, 4–4–15, 2–2–16, 1–4–17). For a preliminary report of the survey results, see Raviv et al. 2018.

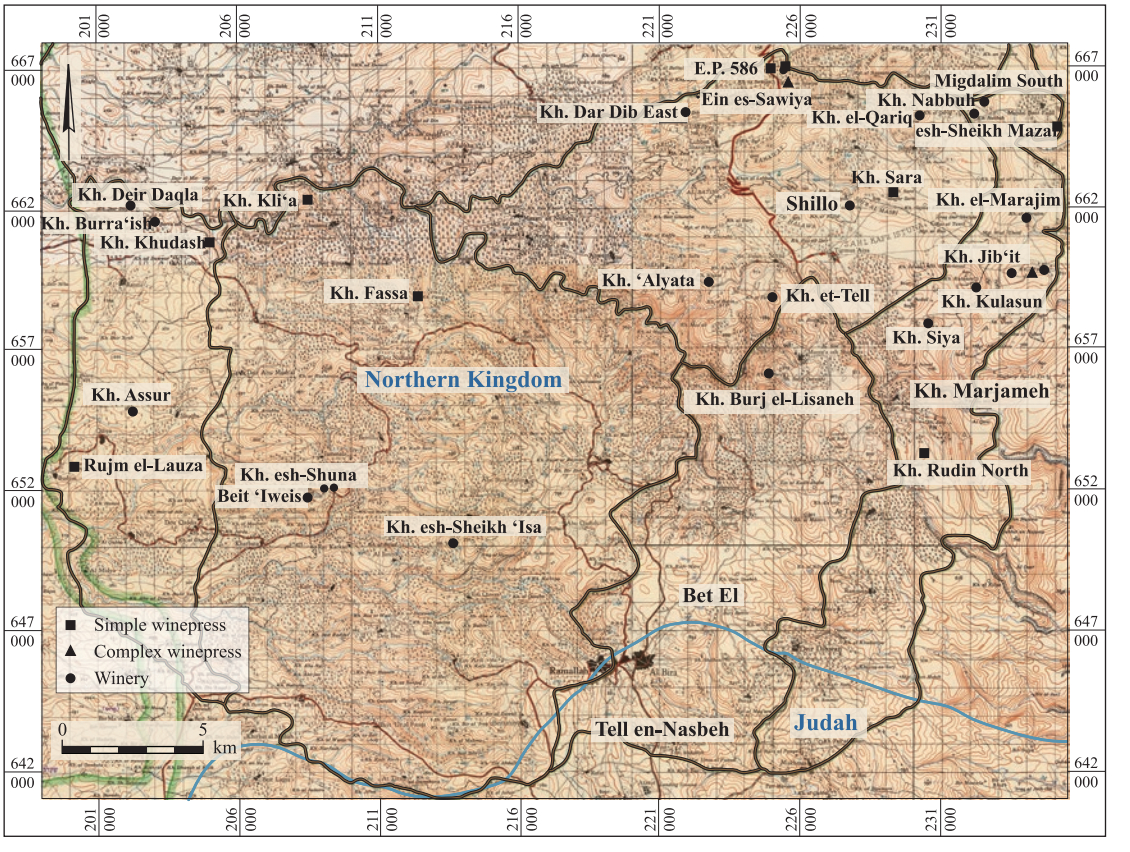

Fig. 1. Location map of southern Samaria Iron II wine-production installations (illustration: A. Tavger; based on 1:100,000 Palestine maps, Sheets 6, 7, 9, 10, 1946).

(Walsh and Zorn 1998). In southern Samaria, the first winepresses were found in David Eitam's survey of Khirbat Khudash and Khirbat Kli'a. These two southwestern Samarian sites, located above the steep stream of Naḥal Shillo, were only inhabited during Iron II (Eitam 1980: Pl. 13; 1992:171). The presses have a square treading surface with rounded corners, a small filter/sedimentation pit, and a large collecting vat (Fig. 2). In the New South Samaria Survey two additional Iron II winepresses were documented at elevation point (E.P.) 586, a one-period site located 5 km northwest of Shillo. Their treading surfaces were similar, with rounded corners (Fig. 3). An additional winepress with the same type of treading surface was found at esh-Sheikh Mazar, a site on the northern desert fringe (Tavger 2018:207–210, 239). Though the survey there attested that the site was also occupied in earlier periods, the typology of its winepress indicates that it probably belongs to the latest Iron II occupation period.

It must be noted that winepresses of the simple treading surface type cannot be solely dated to Iron II, as the new survey documented similar winepresses at single-period Persian-period sites, such as Rujm el-Lauza (Fig. 4) and Khirbat Rudin North (Tavger 2018:34–35, 215). It therefore seems that the more meticulously and deeper-cut treading surfaces of

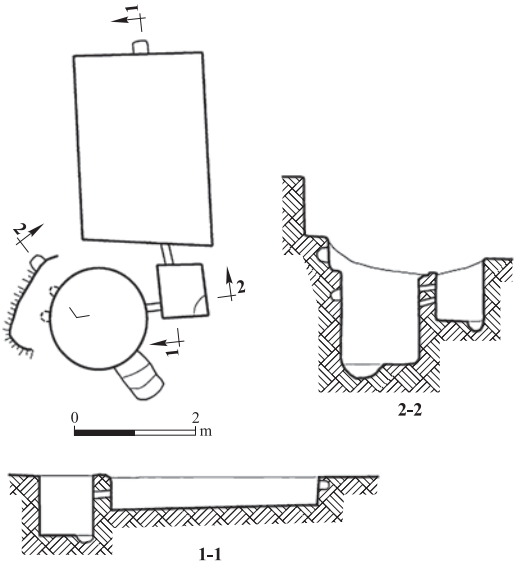

Fig. 2. Sketch and plan of an Iron II winepress from Khirbat Kli'a (after Eitam and Lederman 2024: Fig. 12).

Fig. 3. An Iron II winepress from Elevation Point 586 (photography: D. Raviv).

Fig. 4. A Persian-period winepress at Rujm el-Lauza (photography: D. Raviv).

Fig. 5. Treading surfaces of the ‘Ein es-Sawiya complex winepress (photography: D. Raviv).

southern Samarian winepresses developed only during the Hellenistic period.[9] Thus, other winepresses of this simple type, such as those found at Khirbat Fassa on the western slopes of southern Samaria, and at Khirbat Sara, 2 km east of Shillo (Tavger 2018:96–99, 178–179), cannot be dated with certainty to Iron II, as these sites were also inhabited during the Persian period.[10]

Two winepresses of the complex type were discovered in the new survey. One of them is located at a site situated above the spring of ‘Ein es-Sawiya, 5 km northwest of Shillo, which was first inhabited during Iron II (Tavger 2018:194–196). This winepress contained at least four treading surfaces on two different levels (Fig. 5). Another, more complex winepress

[9] Wolff (2023:974) suggested that the Persian period saw a transition from the round Iron Age winepresses to the rectangular Hellenistic-period style, as evidenced by the Persian-period winepresses at Tel Yavne (Haddad et al. 2021).

[10] The location of the winepress at Khirbat Fassa amidst an Iron II olive press industrial zone (Tavger, in press), suggests that wine production may have been contemporary with olive-oil production.

Fig. 6. The complex winepress at Khirbat Jib'it (photography: D. Raviv).

was found at the eastern edge of Khirbat Jib'it, a large ruin located on the desert fringes, 5 km northeast of Khirbat Marjameh. Khirbat Jib'it is a multi-period site spanning the Early Bronze Age and medieval times, while during Iron II it was apparently most intensively occupied (Ilan and Dinnur 1987; Tavger 2018:225–230). This winepress comprises six treading surfaces and a few various rock-cut depressions or small filter vats on two different levels, and a third lower level with three collecting vats (Figs. 6, 7). At least one rectangular niche for anchoring a beam was carved in the vertical bedrock above one or perhaps two of the surfaces. This feature suggests that the complex was used not only for treading but also for squeezing, using a beam and weights, as was discovered also at Beit Ṣafafa and Rogem Ganim (see above). The great similarity between the Khirbat Jib'it winepress and those exposed at Beit Ṣafafa and Rogen Ganim suggests its use also in late Iron II, possibly even following the Assyrian conquest of the Northern Kingdom and continuing into the Persian period (see *Discussion and Conclusions*, below).

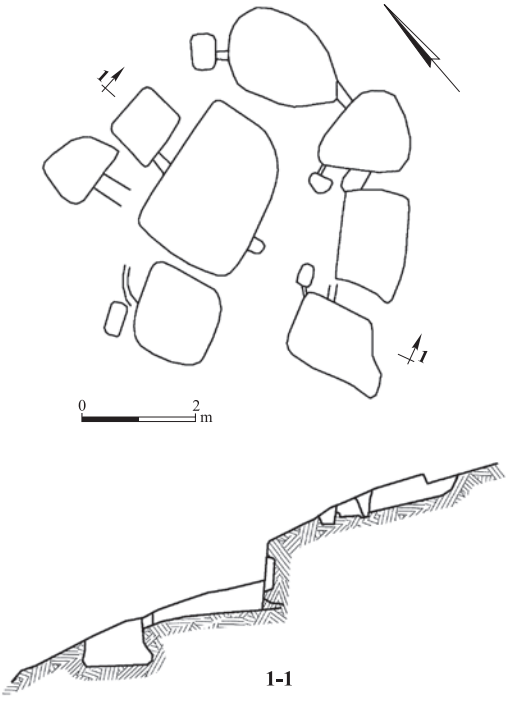

Fig. 7. Plan and section of the Kh. Jib'it complex winepress (drafting: D. Raviv, A. Tavger and F. Portnov).

Bell-Shaped Wineries in Iron II Southern Samaria

The first underground winery in southern Samaria was exposed by the Danish expedition to Shillo in 1926. On the tell's southern slope, not far from the summit, several subterranean complexes were exposed, consisting of about ten bell-shaped pits, which were filled with many Iron II potsherds (Fig. 8). The excavators described these pits as "caves"; however, their plan and sections indicate this to be an underground winery (Tavger 2018:175).

The southern Samaria archaeological surveys conducted in the late 1970s and early 1980s brought to light a few more sites with underground wineries. The first site where bell-shaped pits were identified as a winery was Khirbat Deir Daqla, an Iron II site located in southern Samaria's western foothills, above the steep stream of Naḥal Shillo (Dar 1982:236–237). In addition, in the course of the Khirbat Jib'it survey (see above), a subterranean system was documented that consisted of at least nine bell-shaped pits. The surveyors found Iron IIC pottery inside this system and thus interpreted the bell-shaped pits as an Iron Age winery (Ilan and Dinnur 1987:118–119; see also Raviv et al. 2015:127–128). Two other wineries were found: one at Khirbat esh-Sheikh 'Isa, 10 km west of Bet El (Frumkin 2005), and the

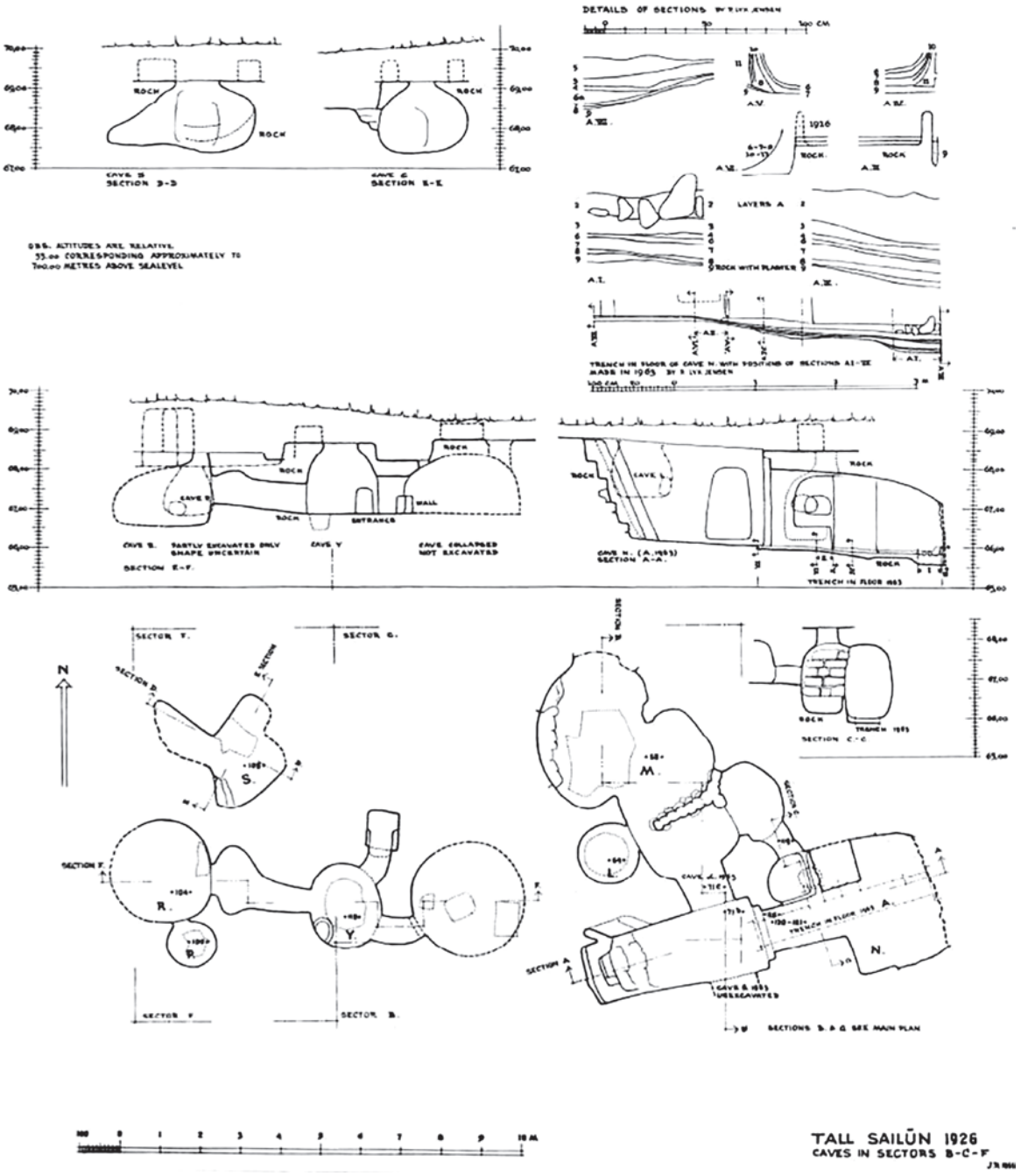

Fig. 8. Plan and sections of bell-shaped pits from Shillo's southern slope (after Buhl and Holm-Nilsen 1969: Pl. B).

other, at Beit ‘Iweis, 6 km northwest of Khirbat esh-Sheikh ‘Isa (Finkelstein et al. 1997:211). At both sites, dozens of adjacent bell-shaped pits were discovered (Figs. 9, 10). Although no dateable finds were documented inside the pits, and both sites were also inhabited in later periods, the clear evidence of an Iron II occupation at the sites and the pits’ typology enabled the surveyors to classify them as Iron Age wineries. Moreover, a concentration of seven bell-shaped pits was discovered in 2009 by Klein and Zissu (2010:100–104) at Khirbat Kulasun, 2.5 km west of Khirbat Jib’it, and was also interpreted as an Iron II winery on the same grounds. Additional pits that might be dated to Iron II were found at a small unnamed site east of Khirbat Dar Dib, 7 km northwest of Shillo. Finkelstein’s survey recorded ten pits, two structures and pottery dated to Iron I, Iron II and the Persian period, without any later periods present (Finkelstein et al. 1997:605). During a recent visit to the site, I found these pits and discerned that they were un-plastered bell-shaped pits. The scanty structural remains found in the surveys may suggest that the site was used mainly as a local winery,

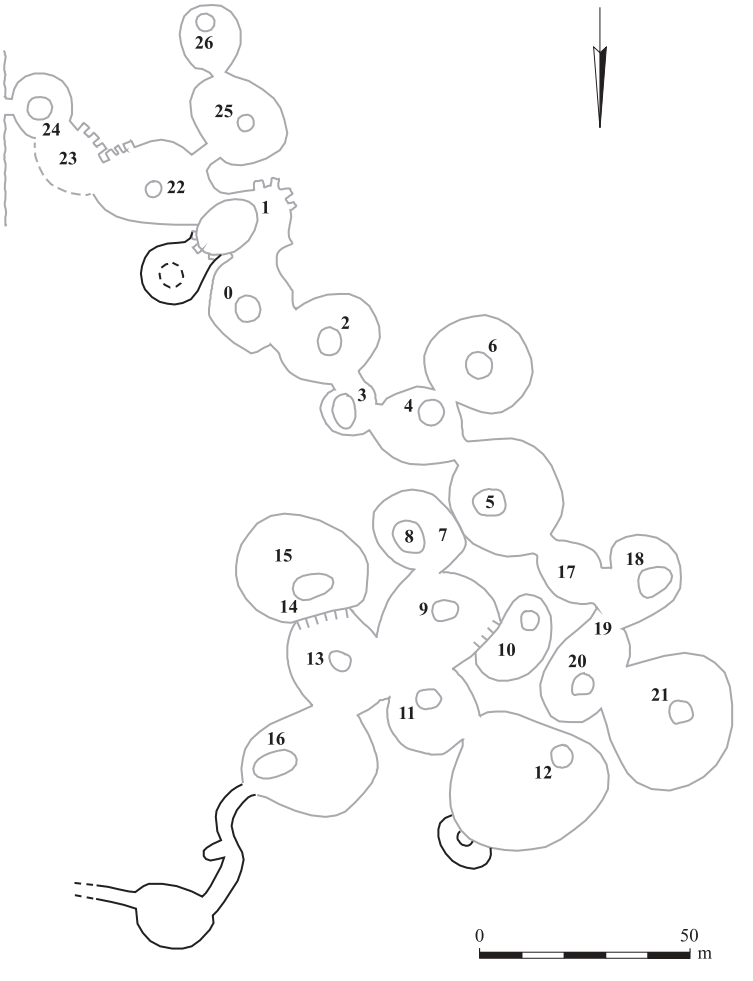

Fig. 9. Plan of the winery at Khirbat esh-Sheikh ‘Isa
(drafting: D. Raviv; after Frumkin 2005:54).

Fig. 10. Three of the pits in the winery at Khirbat Sheikh ‘Isa, looking south (photography: E. Aharonovich); note circular frame of pit opening at bottom.

perhaps belonging to the nearby site of Khirbat Dar Dib, which was first occupied during Iron II (Finkelstein et al. 1997:604; Tavger 2018:190).

In addition to these seven sites, the New South Samaria Survey successfully traced 13 more concentrations of un-plastered bell-shaped pits in the region, which can be identified as Iron II wineries. The revised winery map (see Fig. 1) indicates they were spread throughout all sub-regions of southern Samaria.

In southern Samaria’s western foothills, large wineries with at least nine bell-shaped pits were found at Khirbat Burra’ish, 1 km southeast of Khirbat Deir Daqla (see above), and at Khirbat Assur, 7 km to its south (Tavger 2018:37–38, 52–53). Iron II and Persian-period pottery was found inside the latter’s pits.

In addition to the two large wineries on the western slopes—at Beit ‘Iweis and nearby Khirbat esh-Sheikh ‘Isa (see above)—the new survey recorded two other large wineries at Khirbat esh-Shuna, the eastern hill of Beit ‘Iweis. One has 12 bell-shaped pits, and the other, 29 bell-shaped pits containing a few Iron II pottery sherds (Figs. 11, 12; Tavger 2018:77–80). A niche of a Roman-period burial cave was cut into one of the southern winery’s western pits, indicating that the use of the pits must predate the hewing of this cave.

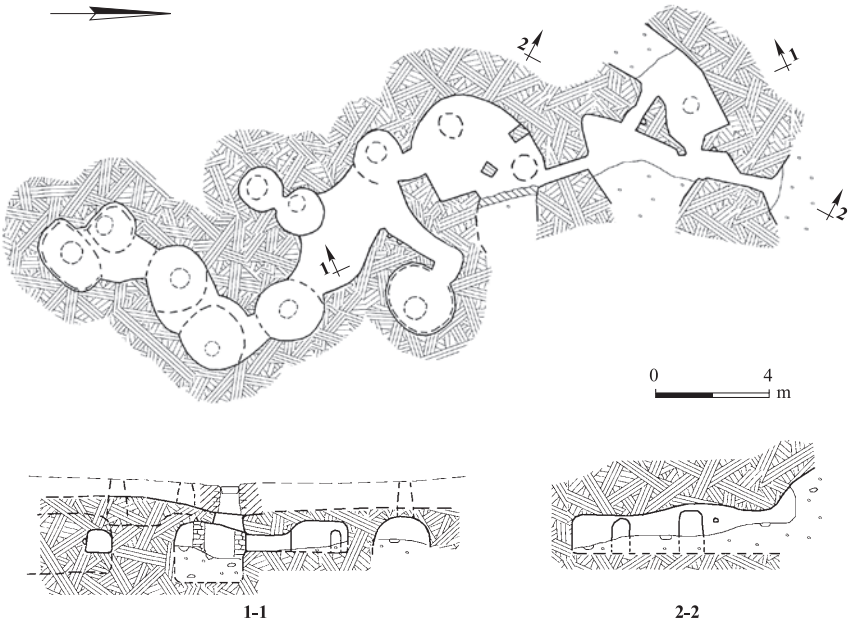

Fig. 11. Plan and sections of the bell-shaped pit concentrations on Khirbat esh-Shuna's eastern slope (drafting: E. Klein, D. Raviv, A. Tavger and F. Portnov).

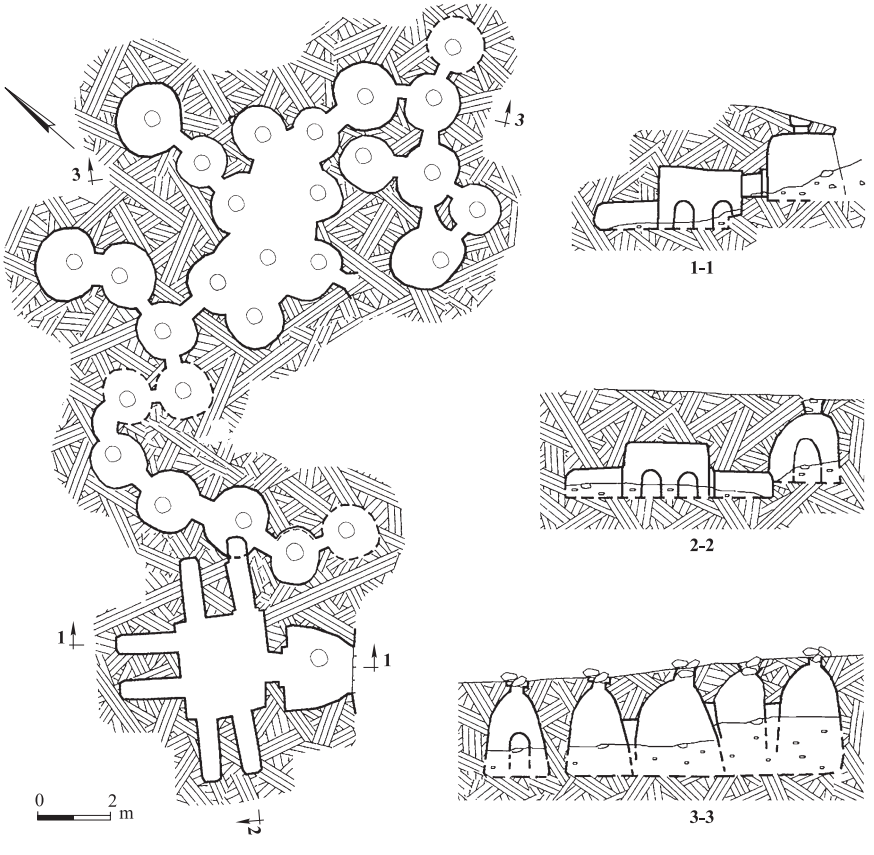

Fig. 12. Plan and sections of bell-shaped pit concentrations on Khirbat esh-Shuna's southern slope (drafting: D. Raviv, A. Tavger and F. Portnov).

Fig. 13. Concentration of bell-shaped pits at Khirbat Burj el-Lisaneh (photography: D. Raviv).

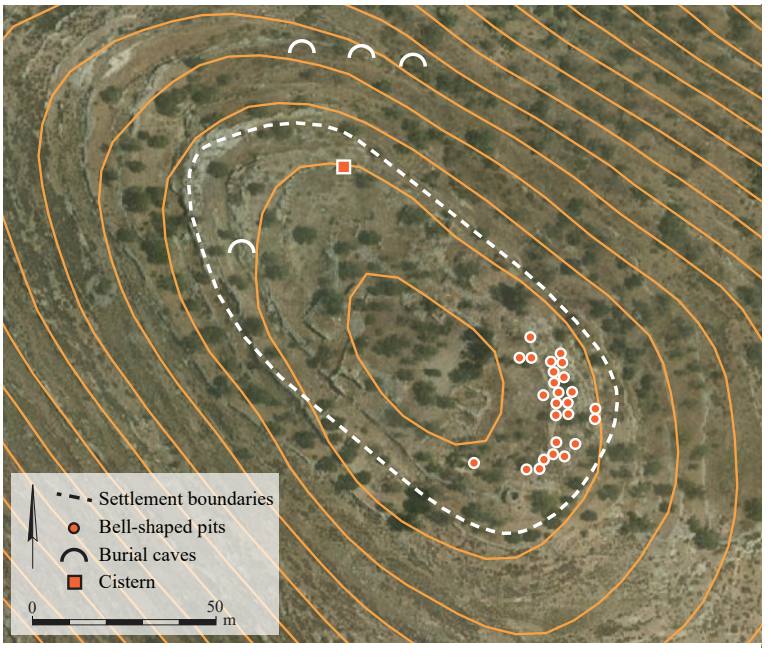

Fig. 14. Distribution of the bell-shaped pits at Khirbat et-Tell (illustration: D. Raviv, A. Tavger and H. Bitan).

Four sites with large concentrations of bell-shaped pits were found also in southern Samaria's central range, to the south and west of Shillo. Iron II pottery was found in looter dumps within the pits of Khirbat el-Qariq, 4 km northeast of Shillo, indicating their probable period of use (Tavger 2018:189). The wineries at Khirbat Burj el-Lisaneh and nearby Khirbat et-Tell, a few kilometers southwest of Shillo, are noteworthy, as they contained 20 or more pits each (Tavger 2018:150–151, 155–156; Figs. 13, 14), although their exact dating cannot be secured. The same is true of nearby Khirbat 'Alyata, where eight bell-shaped pits were found (Tavger 2018:158).

The new survey also expanded the number of sites with wineries on the southern Samaria desert fringes. In addition to the aforementioned winery at Khirbat Jib'it, we found a concentration of six bell-shaped pits on this site's eastern hill (Tavger 2018:226). At the Iron II site of Khirbat el-Marajim, 2 km north of Khirbat Jib'it, an additional concentration of bell-shaped pits was found (Raviv et al. 2015:124–126; Tavger 2018:234–235), with some diagnostic pottery inside it (Fig. 15). Iron II pottery was also retrieved from one of the bell-shaped pits at Khirbat Nabbuh, 4 km northwest of Khirbat el-Marajim (Tavger 2018:239–240). Concentrations of six or more bell-shaped pits were found also at an unnamed site, 0.5 km north of Khirbat Nabbuh ("Migdalim South"), and at Khirbat Siya, 3 km northwest of Khirbat el-Marjameh (Tavger 2018:223, 241–242).

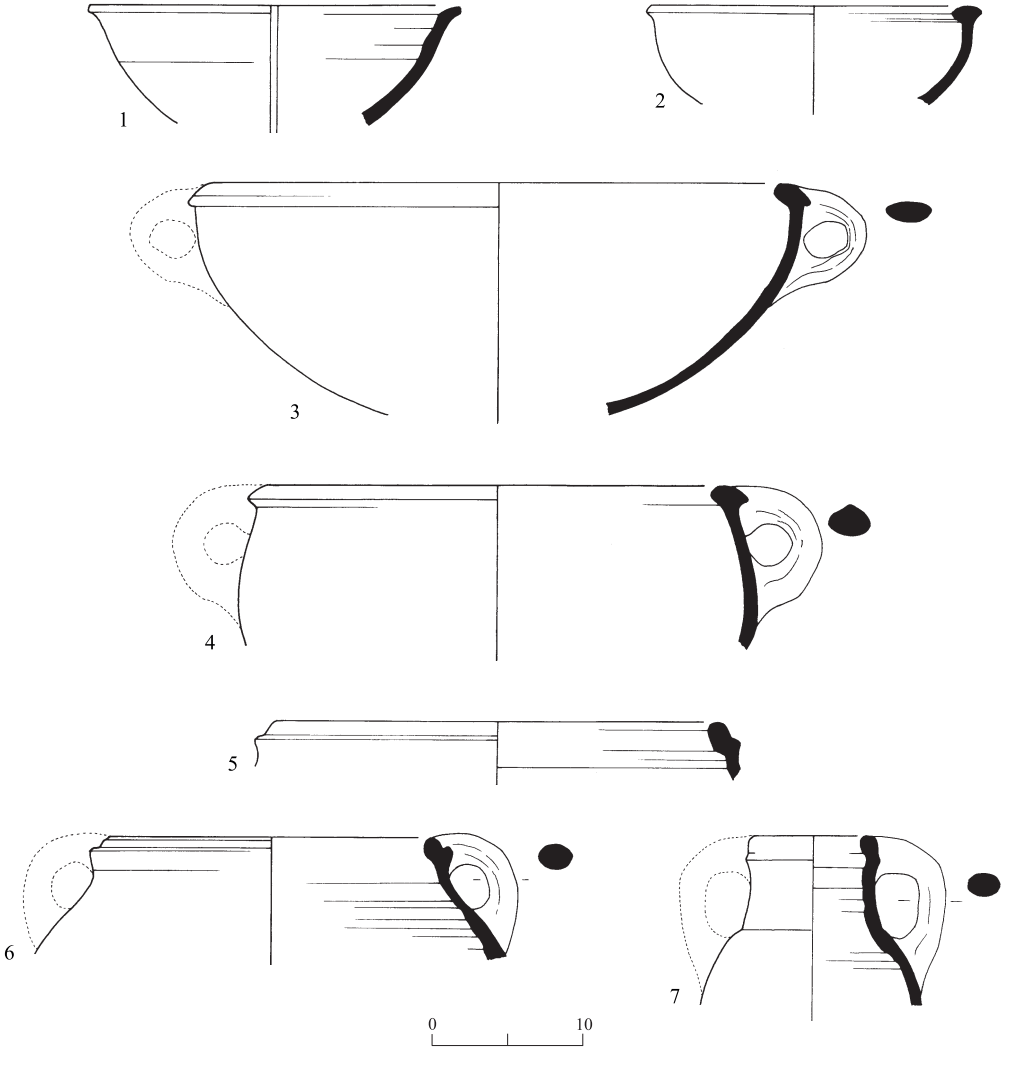

Fig. 15. Iron Age II pottery found within the Khirbat el-Marajim bell-shaped pits (drawing: M. Mekonian and A. Harel).

Discussion and Conclusions

In the past, some of the sites with complex winepresses and large wineries in Judah and in Samaria were considered as royal wine-production centers. In Judah, royal estates were identified mainly in the seventh century BCE, and at the onset of the Persian period. Based on the finding of large wineries and many *LMLK* inscribed handles, together with other stamped handles and seal impressions, such royal estates were claimed to exist at Giv‘on (Pritchard 1964) and at el-Burj (De Groot and Weinberger-Stern 2013); both sited in the Benjamin region, surrounded by small farms and several winepresses along the Soreq Valley (Weksler-Bdolah 1999; Gadot 2015; Storchan 2017). In addition, the area south and west of Jerusalem, where the wineries of Rogem Ganim and Beit Ṣafafa were found, and where agricultural lands spread not far from Ramat Raḥel, was also considered as a region of royal estates for wine production (Feig 2003; Faust and Weiss 2005:81–82; Greenberg and Cinamon 2011:101–102; Gadot 2015; Finkelstein et al. 2022:272).

In the Northern Kingdom, royal estates are known from the Samaria Ostraca, as in the toponyms “Kerem Hatel” and “Kerem Yehieli,” which may have been production centers. These estates, together with the royal cities of Samaria and Jezreel, existed already in the ninth and eighth centuries BCE (Katz 2008:176; Suriano 2016).[11] The data presented above expand the wine-production area to southern Samaria. Although to date, no winery of Giv‘on’s size was found in the study region, southern Samaria does feature at least five large wineries containing between 17 and 29 bell-shaped pits each—such as Khirbat esh-Sheikh ‘Isa, Beit ‘Iweis, Khirbat esh-Shuna, Khirbat Burj el-Lisaneh and Khirbat et-Tell—which at this size can reasonably be classified as wine-production centers.[12]

Moreover, a comparison between sites that contained winepresses and sites where wineries were found (see Fig. 1) indicates some overlap, in regional terms. Apart from the Iron II winepress at Khirbat Kli‘a (and the Persian-period winepress north of Khirbat Rudin), all winepresses were found within a proximity of up to 3 km of an identified winery.[13] The distribution (Fig. 1) indicates widespread wine production throughout southern Samaria’s subregions, with concentrations on the desert fringes and west of Shillo. In the past, it was

[11] Some of the Iron IIA winepresses from northern Philistine coast sites were also assumed to function in cooperation with the Northern Kingdom’s viniculture (Fantalkin 2005:22). However, this connection is yet to be proven.

[12] It must be remembered that the wineries were found in surveyed sites and not excavated ones (apart from Shillo). It is thus likely that the number of pits in these wineries is actually larger than what has been exposed thus far. In three wineries, already found in past surveys, the current survey raised the number of identified bell-shaped pits: at Khirbat Sheikh ‘Isa’s winery, the original number of 24 pits (Frumkin 2005) is now 28 (Tavger 2018:69); at Beit ‘Iweis, the 15 pits (Finkelstein et al. 1997:211) grew to 26 or more (Tavger 2018:75); and at Khirbat Jib’it, we located five pits (Tavger 2018:226) in addition to the nine previously known (Ilan and Dinnur 1987:118–119).

[13] Khirbat Jib’it is the only site featuring both winepresses and wineries. Of course, it does not refute the possibility that other such sites existed in antiquity as well, but it indeed seems that the wine production was probably Khirbat Jib’it’s main industry during Iron II, taking into consideration the complexity of its winepress and the number of pits in its wineries.

suggested that the desert fringes were primarily used for growing grains and as grazing lands for animal husbandry, and less for vineyard cultivation (Faust and Weiss 2005). However, some recent palynological studies suggest that on the Judean desert fringes, some viniculture did exist, at least during late Iron II (Litt et al. 2012; Finkelstein et al. 2022:269). In light of the data presented above, it seems that during the same period, the main branches of agriculture, especially viniculture (for olive oil production on the desert fringes, see Tavger, in press), also flourished on the desert fringes of southern Samaria, and became one of the region's most important industries.[14]

But one historical issue remains unresolved: Did the wine production sites in southern Samaria belong to the Iron II Northern Kingdom agricultural system?[15] Were they part of the same Assyrian economic system that developed north of Jerusalem, mainly in the seventh century BCE, perhaps continuing into the early Persian period? As mentioned above, accurate dating of agricultural installations is difficult, certainly within the limitations of survey results. Nevertheless, the data concerning the sites' occupation periods enables raising some hypotheses to address these questions.

Most of the 27 southern Samarian wine-production sites were occupied following the Assyrian conquest of the Northern Kingdom (Fig. 16). Nineteen sites were occupied both in Iron II and the Persian period, and 13 of them bore evidence of settlement in Iron IIC.[16] Only six sites ceased to exist following the Assyrian conquest. Two other sites were occupied only during the Persian and early Hellenistic periods, and consequently, their installations cannot be dated to the Iron Age at all. In other words, almost all of the wine-production sites existed alongside the Northern Kingdom and may have already produced wine then. However, the occupation in most of these sites did not cease following the Assyrian conquest, and it is safe to assume that many of them continued to produce wine under Assyrian rule. As mentioned above, at least two wineries, at Khirbat Assur and Khirbat Jib'it, yielded Iron IIC or Persian-period pottery, evidence for their use in these periods. Furthermore, almost all the parallels of the bell-shaped wineries found outside southern Samaria are dated to Iron IIC and the Persian period (with the exception of the pits from the city of Samaria, see above). In addition, parallels of the complex winepresses found at 'Ein es-Sawiya and Khirbat Jib'it are also associated with late Iron Age and early Persian-period contexts, suggesting that at least these two winepresses were hewn out only following the Assyrian conquest.

---

[14] The flourishing of a wine industry on the desert fringes has also been observed in the Roman–Byzantine periods in the Mount Hebron region (Baruch 2009:364–411).

[15] In this regard, I should note that there is insufficient data to precisely date the onset of wine production in southern Samaria to Iron IIA or IIB. While most of the sites were first occupied prior to Iron IIB (see Appendix 1), the distinction between these sub-periods is not a simple task (see Tavger 2018:391–393). Moreover, when sites were continuously inhabited during Iron II, there is no way to discern if the installations were hewn already in Iron IIA.

[16] Three of the remaining six sites were not surveyed in the New South Samaria Survey. While pottery types specifically datable to Iron IIC were isolated in the new survey (Tavger 2018: 381), the exact occupation periods of those sites that were not re-surveyed remains unclear.

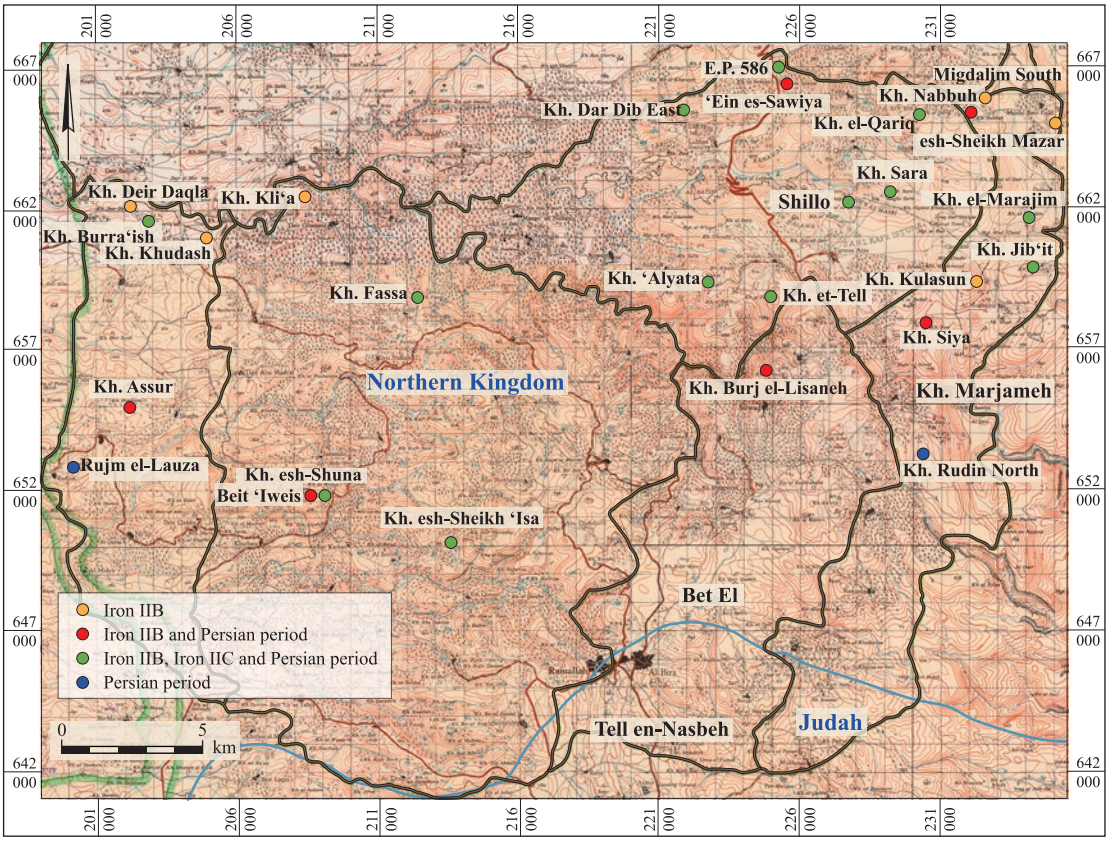

Fig. 16. Occupation periods in southern Samaria sites with wine production installations (illustration: A. Tavger; based on 1:100,000 Palestine maps, Sheets 6, 7, 9, 10, 1946)

This insight is a bit surprising, as it differs from the larger picture of occupation following the Assyrian conquest in southern Samaria. According to recent studies, it seems that the majority of Iron II sites (c. 60%) ceased to exist, and that the Assyrian rulers did not invest in this neglected region (Tavger 2018:393–397; 2020). One may suggest that sites in which viniculture served as a primary economic branch were more durable and thus, most survived the Assyrian conquest, in contrast to the other sites in the region. The main income of these sites was from wine production, and it is only logical to assume that they maintained their vocation even when political changes occurred.[17]

In conclusion, it is apparent that wine production in southern Samaria was widespread throughout all its sub-regions during Iron II, with an emphasis on the desert fringes.

[17] It is beyond the scope of this paper to discuss the influence of imperial rule on the local agricultural economy during the Assyrian, Babylonian and Persian eras. For further discussion of this issue, see, e.g., Faust and Weiss 2005; Katz 2008; Faust 2011; 2021; Lipschits 2015; Finkelstein et al. 2022.

Following the Assyrian conquest of the Israelite Kingdom, indeed, some of these production sites were abandoned. Yet, it still seems that this industry did not expire, and that some sites continued to produce wine under Assyrian control during the seventh century BCE. It turns out that wine-production installations continued to be used even in the Persian period, at least in some of these sites. The new data indicates that the flourishing specialized viniculture economy during these periods was not unique only to the Philistine coast and to the Judean highlands surrounding Jerusalem and Ramat Raḥel, but also existed to some extent in southern Samaria.

Acknowledgments

This article is based upon a study conducted as part of the author's Ph.D. dissertation (Tavger 2018), submitted to Ariel University, under the supervision of Prof. Itzick Shai and Prof. Yossi Goldstein. The preparation of this article was made possible with the assistance of the Milken Family Foundation, the Joint Research Fund of Ariel University and Eastern R&D Center, and of the Roger and Susan Hertog Center for the Archaeological Study of Jerusalem and Judah at the Hebrew University of Jerusalem. The documentation of winepresses and wineries in southern Samaria was aided by Dr. Dvir Raviv of Bar-Ilan University, Evgeny Aharonovich and Binyamin Har-Even of the Civil Administration of Judea and Samaria, and students of the Lapidot Pre-military Academy. I wish to thank the anonymous reviewers for their helpful comments.

Appendix 1: Southern Samaria Iron II Wine Production Installations[i]

Site	ITM	Sub-Region	Occupation Periods	Winepresses	Bell-Shaped Pits (Winery)	References
Rujm el-Lauza	2001/6529	Western foothills	Persian	1		Tavger 2018: 34–35
Kh. Assur	2018/6552	Western foothills	Iron IIB; Persian		9+1	Tavger 2018: 37–38
Kh. Deir Daqla	2021/6621	Western foothills	Iron I, IIA, IIB		5	Tavger 2018: 55–56
Kh. Burra'ish	2028/6616	Western foothills	Iron I, IIA, IIB, IIC; Persian		9+1	Tavger 2018: 52–54
Kh. Khudash	2048/6609	Western Foothills	Iron I, IIA, IIB	2		Eitam 1980: 68–69; 1992
Kh. Kli'a	2084/6624	Western Slopes	Iron I, IIA, IIB	2		Eitam 1980: 69–92
Beit 'Iweis	2087/6519	Western Slopes	Iron I, IIB; Persian		29	Tavger 2018: 74–82

[i] Pre-Iron Age and post-Persian occupation periods are not included.

APPENDIX 1. (cont.)

Site	ITM	Sub-Region	Occupation Periods	Winepresses	Bell-Shaped Pits (Winery)	References
Kh. esh-Shuna	2089/6519	Western Slopes	Iron IIA, IIB, IIC; Persian		26+12	Tavger 2018: 74–82
Kh. Fassa	2124/6587	Western Slopes	Iron I, IIA, IIB, IIC; Persian	1		Tavger 2018:96–99
Kh. esh-Sheikh ‘Isa	2135/6501	Western Slopes	Iron I, IIA, IIB, IIC; Persian		28+4	Tavger 2018: 68–71
Kh. Dar Dib East	2219/6656	Western Slopes	Iron I, II, II/ Persian; Persian		10	Tavger 2018: 191
Kh. ‘Alyata	2227/6593	Central Range	Iron I, I/II, II; Persian		8	Tavger 2018: 157–159
Kh. Burj el-Lisaneh	2248/6561	Central Range	Iron II; Persian		17	Tavger 2018: 150–151
Kh. et-Tell	2249/6587	Central Range	Iron I, I/Iron II, II, II/Persian; Persian		26	Tavger 2018: 155–156
Elevation Point 586	2253/6671	Central Range	Iron I, IIA, IIB, IIC; Persian	2	4	Tavger 2018: 196–199
‘Ein es-Sawiya	2254/6665	Central Range	Iron IIB; Persian	1 complex		Tavger 2018: 194–196
Shillo	2275/6625	Central Range	Ir I, IIA, IIB, IIC; Persian		8+1	Tavger 2018: 172–177
Kh. Sara	2292/6626	Central Range	Iron IIA, IIB, IIC; Persian	1	2	Tavger 2018: 178–179
Kh. el-Qariq	2301/6653	Central Range	Iron I, IIB, IIC; Persian		5	Tavger 2018: 189–190
Kh. Rudin North	2302/6531	Desert Fringe	Persian			Tavger 2018: 215
Kh. Siya’	2304/6579	Desert Fringe	Iron II; Persian		8	Tavger 2018: 223
Kh. Kulasun	2321/6594	Desert Fringe	Iron I, IIB		6+2	Tavger 2018: 223–225
Kh. Nabbuh	2322/6651	Desert Fringe	Iron II; Persian		5	Tavger 2018: 239–240
Migdalim South	2325/6656	Desert Fringe	Iron I, IIB		7+3	Tavger 2018: 241–242
Kh. el-Marajim	2340/6616	Desert Fringe	Iron I, IIA, IIB, IIC; Persian		6	Tavger 2018: 233–237
Kh. Jib’it	2346/6598	Desert Fringe	Iron I, IIA, IIB, IIC; Persian	1 complex	14+6+1	Tavger 2018: 225–230
esh-Sheikh Mazar	2350/6648	Desert Fringe	Iron I, IIB	1		Tavger 2018: 239
Total				*10 simple + 2 complexes*	*20 wineries*	

References

Albright W.F. 1924. *Excavations and Results at Tell el-Fûl (Gibeah of Saul)* (AASOR 4). New Haven.

Albright W.F. 1943. *The Excavation of Tell Beit Mirsim* III: *The Iron Age* (AASOR 21–22). New Haven.

Amiran R. 1975. A Note on the 'Gibeon Jar'. *PEQ* 107:129–132.

Baruch Y. 2009. *Horbat Susya and Rujum el-Hamiri as a Case Study for the Development of the Village and the Rural Settlement in the Southern Hebron Hills from the Early Roman to the Early Muslim Periods*. Ph.D. diss. The Hebrew University of Jerusalem. Jerusalem (Hebrew; English summary, pp. i–xii).

Buhl M.-L. and Holm-Nilsen S. 1969. *Shiloh: The Danish Excavations at Tall Sailūn, Palestine, in 1926, 1929, 1932, and 1963* I: *The Pre-Hellenistic Remains* (Publications of the National Museum, Archeological-Historical Series I XII). Copenhagen.

Dar S. 1980. Khirbet Jema'in: A Village from the Period of the Monarchy. *Qadmoniot* 51–52:97–100 (Hebrew).

Dar S. 1982. *The Settlement Pattern of Western Samaria in the Times of the Second Temple, Mishna, the Talmud and the Byzantine Period*. Tel Aviv (Hebrew).

Dayagi-Mendels M. 1999. *Drink and Be Merry: Wine and Beer in Ancient Times* (Israel Museum Catalogue 417). Jerusalem.

De Groot A. and Weinberger-Stern M. 2013. Wine, Oil and Gibeonites: Iron Age II–III at Kh. el-Burj Northern Jerusalem. In G. Galil, E. Baruch and A. Faust. *New Studies on Jerusalem* 19. Ramat Gan. Pp. 95–102 (Hebrew).

Ebeling J., Franklin N. and Cipin I. 2012. Jezreel Revealed in Laser Scans: A Preliminary Report of the 2012 Survey Season. *NEA* 75:232–239.

Eitam D. 1980. *Olive Oil and Wine Production at Mount Ephraim during the Iron Age*. M.A. thesis. Tel Aviv University. Tel Aviv (Hebrew).

Eitam D. 1992. Khirbet Khaddash: Royal Industry Village in Ancient Israel. *JSRS* 1:161–182 (Hebrew; English summary, pp. XVIII–XIX).

Eitam D. and Lederman Z. 2024. Qla: A Royal Oil and Wine-Production Centre in the Kingdom of Israel. *Tel Aviv* 51:1–24.

Fantalkin A. 2005. A Group of Iron Age Wineries from Ancient Jaffa (Joppa). *Salvage Excavation Reports* 2:3–26.

Faust A. 2011. The Interests of the Assyrian Empire in the West: Olive Oil Production as a Test-Case. *JESHO* 54:62–86.

Faust A. 2021. *The Neo-Assyrian Empire in the Southwest: Imperial Domination and Its Consequences.* Oxford.

Faust A. and Weiss E. 2005. Judah, Philistia, and the Mediterranean World: Reconstructing the Economic System of the Seventh Century B.C.E. *BASOR* 338:71–92.

Feig N. 2003. Excavations at Beit Ṣafafa: Iron Age II and Byzantine Agricultural Installations South of Jerusalem. *'Atiqot* 44:191–238.

Finkelstein I., Gadot Y. and Langgut D. 2022. The Unique Specialised Economy of Judah under Assyrian Rule and Its Impact on the Material Culture of the Kingdom. *PEQ* 154:261–279.

Finkelstein I., Lederman Z., Bunimovitz S. and Benenson I. 1997. Description of Sites. In I. Finkelstein, Z. Lederman and S. Bunimovitz. *Highlands of Many Cultures: The Southern Samaria Survey—The Sites* (Tel Aviv University Institute of Archaeology Monograph Series 14). Tel Aviv. Pp. 131–856.

Frankel R. 1999. *Wine and Oil Production in Antiquity in Israel and Other Mediterranean Countries* (*JSOT*/ASOR Monograph Series 10). Sheffield.

Franklin N. 2004. Samaria: From the Bedrock to the Omride Palace. *Levant* 36:189–202.

Franklin N. 2018. Exploring the Function of Bell-Shaped Pits: With a View to Iron Age Jezreel. *Eretz-Israel* 33:76*–82*.

Franklin N., Ebeling J., Guillaume P. and Appler D. 2020. An Ancient Winery at Jezreel, Israel. *JEMAHS* 8:58–78.

Frumkin A. 2005. Underground Wine Cellars in Western Samaria. *JSRS* 14:53–56 (Hebrew; English summary, pp. X–XI).

Greenberg R. and Cinamon G. 2006. Stamped and Incised Jar Handles from Rogem Ganim and Their Implications for the Political Economy of Jerusalem, Late 8th–Early 4th Centuries BCE. *Tel Aviv* 33:229–243.

Greenberg R. and Cinamon G. 2011. Excavations at Rogem Ganim, Jerusalem: Installations of the Iron Age, Persian, Roman and Islamic Periods. *'Atiqot* 66:79–106.

Hadas A. 2008. A Proposed Classification System for Ancient Winepresses. *JSRS* 17:151–161 (Hebrew; English summary, pp. XVI–XVII).

Haddad E., Nadav-Ziv L., Elisha Y., Tal G., Rauchberger L. and Sandhaus D. 2021. Tel Yavne, Area A. *HA–ESI* 133 (January 24). https://www.hadashot-esi.org.il/report_detail_eng.aspx?id=25883&mag_id=133 (accessed January 16, 2024).

Hirschfeld Y. 1983. Ancient Wine Presses in the Park of Aijalon. *IEJ* 33:207–218.

Ilan Z. and Dinur U. 1987. Jib'it: An Ancient Site in the Desert Fringe of Samaria. In Z.. Erlich ed. *Shomron and Binyamin* 1:114–130 (Hebrew).

Katz H. 2008a. *'A Land of Grain and Wine … A Land of Olive Oil and Honey': The Economy of the Kingdom of Judah.* Jerusalem (Hebrew).

Katz H. 2008b. Population Increase and the Olive Oil Industry in Eighth-Century BCE Judah. *Cathedra* 130:5–16 (Hebrew; English summary, p. 189).

Klein E. and Zissu B. 2010. Khirbet Kulâsôn: A Site from the Second Temple Period and the Bar-Kokhba Revolt in the Toparchy of Acraba. *JSRS* 19: 95–112 (Hebrew; English summary, pp. XV–XVI).

Langgut D., Finkelstein I., Litt T., Neumann F.H. and Stein M. 2015. Vegetation and Climate Changes during the Bronze and Iron Ages (~3600–600 BCE) in the Southern Levant Based on Palynological Records. *Radiocarbon* 57:217–235.

Lapp N.L. 1981. *The Third Campaign at Tell el-Fûl: The Excavations of 1964* (AASOR 45). Cambridge, Mass.

Liphschitz N. 1987. The Landscape of Vegetation and Weather Conditions in Judah and Samaria in Ancient Times. *Rotem* 22:21–26 (Hebrew; English summary, p. 114).

Lipschits O. 2015. The Rural Economy of Judah during the Persian Period and the Settlement History of the District System. In M.L. Miller, E. Ben-Zvi and G.N. Knoppers eds. *The Economy of Ancient Judah in Its Historical Context*. Winona Lake. Pp. 237–264.

Litt T., Ohlwein C., Neumann F.H., Hense A. and Stein M. 2012. Holocene Climate Variability in the Levant from the Dead Sea Pollen Record. *Quaternary Science Reviews* 49:95–105.

Morin E., Ryb T., Gavrieli I. and Enzel Y. 2019. Mean, Variance, and Trends of Levant Precipitation over the Past 4500 Years from Reconstructed Dead Sea Levels and Stochastic Modeling. *Quaternary Research* 91:751–767.

Orland I.J., Bar-Matthews M., Kita N.T., Ayalon A., Matthews A. and Valley J.W. 2009. Climate Deterioration in the Eastern Mediterranean as Revealed by Ion Microprobe Analysis of a Speleothem that Grew from 2.2 to 0.9 ka in Soreq Cave, Israel. *Quaternary Research* 71:27–35.

Pritchard J.B. 1959. *Hebrew Inscriptions and Stamps from Gibeon*. Philadelphia.

Pritchard J.B. 1964. *Winery, Defenses, and Soundings at Gibeon*. Philadelphia.

Raviv D., Har-Even B., Aharonovich E. and Tavger A. 2015. Hiding in the Desert: Hiding Complexes from the Time of Jewish Revolts against the Romans in South Samaria and the Benjamin Desert. *In the Highland's Depth: Ephraim Range and Binyamin Research Studies* 5:123–150 (Hebrew; English summary, p. 37*).

Raviv D., Har-Even B., Aharonovich E. and Tavger A. 2018. The New Southern Samaria Survey: Selected Finds and Preliminary Conclusions. *Qadmoniot* 156:115–123 (Hebrew).

Stager L.E. 1990. Shemer's Estate. *BASOR* 277–278:93–107.

Stern E. 1982. *The Material Culture of the Land of the Bible in the Persian Period 538–332 B.C. Warminster*–Jerusalem.

Storchan B. 2017. Jerusalem, Ramat Shelomo. *HA–ESI* 129 (December 16). https://www.hadashot-esi.org.il/report_detail_eng.aspx?id=25348&mag_id=125 (accessed January 16, 2024).

Suriano M.J. 2016. Wine Shipments to Samaria from Royal Vineyards. *Tel Aviv* 43:99–110.

Tavger A. 2018. *South Samaria during the Iron Age II and the Persian Period: An Archaeological View*. Ph.D. diss. Ariel University. Ariel.

Tavger A. 2020. The Province of Samerina under Neo-Assyrian Rule. In K. Gavagnin and R. Palermo eds. *Imperial Connections: Interactions and Expansion from Assyria to the Roman Period* 2 *(Proceedings of the 5th "Broadening Horizons" Conference (Udine 5–8 June 2017)* (West and East Monografie 3). Trieste. Pp. 183–201.

Tavger A. In press. A New Look at Iron Age II Olive Oil Production in Southern Samaria: Royal Industry vs. Local Economy. *IEJ*.

Weksler-Bdolah S. 1999. Alona. *ESI* 19:68*–70*.

Walsh C. and Zorn J.R. 1998. New Insights from Old Wine Presses. *PEQ* 130:154–161.

Wolff S.R. 2023. Remarks on the Typology and Chronology of Iron Age and Persian Period Winepresses. In E. Ben-Yosef and I.W.N. Jones eds. *"And in Length of Days Understanding" (Job 12:12): Essays on Archaeology in the Eastern Mediterranean and Beyond in Honor of Thomas E. Levy* (Interdisciplinary Contributions to Archaeology). Cham. Pp. 961–976.

Wright G.E. 1963. Review of J.B. Pritchard. The Water System of Gibeon. Philadelphia 1961. *JNES* 22:210–211.

Zorn J.R. 1993. *Tell en-Nasbeh: A Re-evaluation of the Architecture and Stratigraphy of the Early Bronze Age, Iron Age and Later Periods*. Ph.D. diss. University of California. Berkeley.