'Atiqot 114, 2023

Bronze Age Winepresses and Roman-Period Burial Caves near Nein, Giv'at Ha-More

Eyad Bisharat and Yardenna Alexandre[1]

An excavation carried out near Nein, a village located between Jezreel Valley and Galilee, exposed a concentration of 10 simple rock-cut winepressing installations, possibly dating to the Middle Bronze Age. Three Roman-period burial caves with *kokhim*, whose vertical access shafts cut through the pressing installations, were partially excavated, yielding stone ossuaries and accompanying grave goods, comprising a variety of pottery vessels including many lamps, and a few glass and metal artifacts. The pottery assemblage dates from the first to the third century CE and is composed of vessels, some characteristic of Jewish Galilee and others, of the Jezreel valley and southern Carmel Range, thus reflecting the geographical location of the site. The oil lamps exhibit many different types, some specifically Jewish, whilst some of the later lamps may reflect the presence of a Samaritan population at the site in the third century CE.

Keywords: simple winepresses, Roman period, kokhim, burial caves, Galilean pottery, Jezreel Valley/southern Carmel pottery, Jewish lamps, Samaritan lamps

Introduction

In August 2013, an archaeological excavation was carried out on the lower northwestern slope of Giv'at Ha-More Ridge (Djebel Dahy; summit c. 517 m asl), adjacent to Naḥal Nein, c. 800 m east of the present-day village of Nein[2] (map ref. 23367–73/72646–50; Fig. 1).[3]

---

[1] Eyad Bisharat and Yardenna Alexandre, Israel Antiquities Authority.

[2] The name of the village appears in the English historical sources spelt both as Nein and Nain.

[3] The salvage excavation (Permit No. A-6873/2013) was undertaken subsequent to the exposure and partial damaging of archaeological remains in the course of earthworks carried out on behalf of Alon Tabor Industrial Park. The excavation, funded by the Ministry of Industry and Commerce and the Jezreel Regional Council, was directed by Eyad Bisharat on behalf of the Israel Antiquities Authority, with the assistance of Mark Kunin and Avi Hajian (field plans); Yaron Bibas (field photography); Uri Laban (administration); Walid Atrash (scientific consultation); Anastasia Shapiro (microscopic examination of pottery ware, location map); Leea Porat (pottery restoration); Hagit Tahan-Rosen (final plans, pottery drawings); Carmen Hersch (glass drawings); Yael Gorin-Rosen (glass processing); Clara Amit (find photography); Toby Klein (photograph processing, pottery figures, lamp research); Victoria Nosikovsky (metal laboratory). The report was prepared by Yardenna Alexandre and Eyad Bisharat.

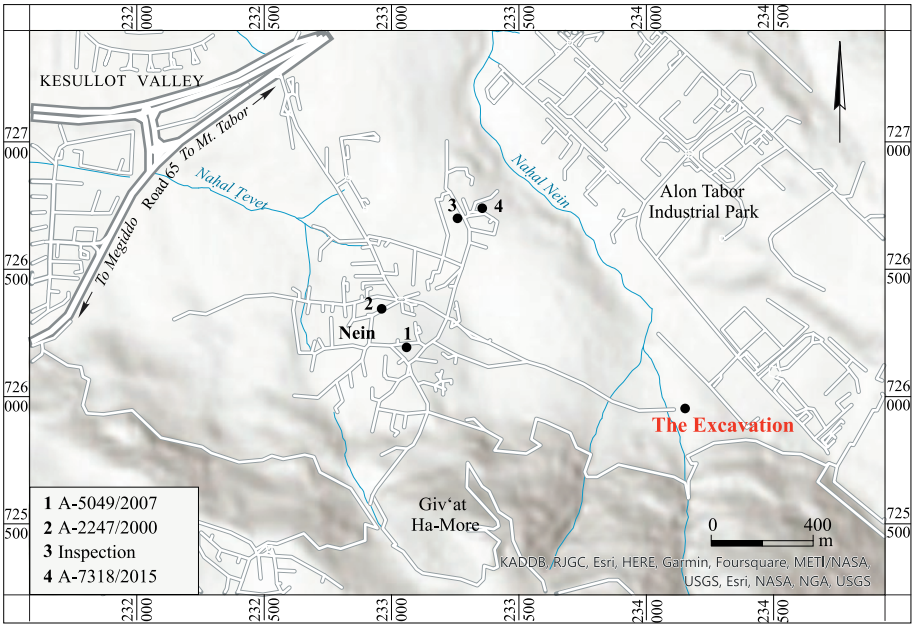

Fig. 1. Location map.

The excavation exposed a concentration of ten simple rock-hewn installations cut into the limestone, probably dating to the Bronze Age, and three burial caves from the Roman period (Caves A–C). Although the excavation was located within the area of the registered archaeological site of Tel ʻAgol, a tell site settled mainly in the Iron Age and Persian periods, the burial caves were almost certainly not associated with the tell, but rather with the nearby ancient village of Nein.

The ancient village lay adjacent to Naʻim Spring (ʻEn Naʻim; 240 m asl), within the present-day village of Nein. The spring waters flow along Naḥal Ṭevet into Kesullot Valley, the northeastern extension of the expansive Jezreel Valley, where the rich alluvial lands were exploited for agriculture in antiquity. An ancient road running from Megiddo via Mt. Tabor into Galilee, passed about a kilometer northwest of the village (approximately the route of present-day Road 65; Fig. 1); an ancient east–west road from Megiddo to Bet She'an ran south of Givʻat Ha-More, about 6 km south of Nein.

Early Written Sources and Previous Surveys

A Jewish homily about Jacob's blessing to Issachar, dating to about the fourth century CE, mentions the word pleasant, '*nʻym*' (Naʻim)—"and he saw the land…that it was pleasant", and identifies it with the village of Nein situated within the tribal territorial inheritance of Issachar (*Bereshit Raba* 88:12). The village was identified by Eusebius and Jerome as the village of Nain, where Jesus was acknowledged for resurrecting the widow's son (Baldi 1955: No. 531; see Luke 7:11–15). This ancient tradition was preserved over the centuries by the local Muslim villagers and Christian pilgrims, and in 1881, the Franciscans constructed a church in the village in commemoration of the miracle (Bagatti 2001:218–224).

In the 1870s, prior to the construction of the Franciscan church, Victor Guérin (1880:115–117) visited Nein, describing the nearby spring as encased by a vaulted structure, and mentioning adjacent ruins of two large, east–west oriented buildings. Guérin proposed that the two structures may once have been Christian chapels, later converted into mosques, and subsequently abandoned; he also noted cisterns, burial caves, tombs and rock-cut installations. The Survey of Western Palestine described Nein as a hamlet of stone and mud on a small plateau perched above Jezreel Valley, with many ruins lying to its north (Conder and Kitchener 1882:86, 125). The survey of 'En Dor conducted in this area documented rock-hewn winepresses, ancient cemeteries with cist graves and rock-hewn shafts, leading into burial caves containing arcosolia (Gal 1998:55*–56*: Site 11).

Previous Excavations of Roman-Period Archaeological Remains

In 1976, two burial caves were excavated near Nein (Arav 1977) and in subsequent years, 27 salvage excavations, mostly small, were carried out in and around the village. The architectural remains exposed were predominantly dated to the Early Islamic, Mamluk and Ottoman periods, while only few remains which could be associated with a Roman-period settlement at the site were uncovered in small-scale excavations.

A small excavation southeast of the spring, directed by Abu Zedan in 2007, exposed a few late Hellenistic house walls, overlain by part of an Early Roman house (Fig. 1:1). Here, four partially exposed rooms of a building contained pottery of the Eastern Terra Sigillata group and other luxury artifacts dating to the latter half of the first century CE, as well as a few human skeletal remains and an iron house key, all covered over by a burned destruction layer. Abu Zedan, Alexandre and Syon (2022) proposed associating the violent destruction of this house with events that took place at the boundary between the Jezreel Valley and Lower Galilee at the time of the First Jewish Revolt (or the 'Great Revolt') against the Romans in 66–67 CE.

An excavation just west of the spring partially exposed rock-hewn underground passages and cisterns yielding Early Roman, first-century CE pottery; the remains were understood as part of an underground hideout complex, also dating to the time of the First Jewish Revolt (Fig. 1:2; Oshri 2000). On the northwestern slope of Nein, a few rock-hewn winepresses associated with Roman and Byzantine pottery were uncovered (Porat 2000; Mokary 2002).

Several Roman-period burial caves were exposed near the northeastern edge of Nein: a burial cave of the *kokhim* (loculi) type with a square shaft, which yielded pottery and glass artifacts from the first century CE (Arav 1977); a burial cave from the Late Roman–early Byzantine period with arcosolia and an elaborately carved limestone door, exposed in the course of supervision over infrastructure works, was examined but not excavated (Fig. 1:3; Alexandre 2000); a number of rock-hewn burial caves comprising vertical shafts and burial chambers, dated to the Roman period, the first to third centuries CE (Fig. 1:4; Dalali-Amos 2018).

The Excavation

Bronze Age Pressing Installations

The present excavation was conducted in an area where shallow rock cuttings were visible on exposed limestone bedrock. Removal of the surface soil exposed a concentration of ten small rock-cut installations (Plan 1:1–10).[4] The roughly hewn installations, although differing in the details of their construction and dimensions, shared a basic layout comprising a shallow, sloping treading floor with a short rock-hewn channel leading into a small collecting vat.

Installations 1 and 3–7 had an irregularly shaped treading floor and one or more, small rock-cut vats. Installation 1 had three small oval vats cut into its treading floor (L101), two of which were shallow (L112, L118; 0.4–0.6 m deep), and the third deeper and bell-shaped (L120; 0.8 m depth, diameter at top 0.5 m, max. diam. 1.0 m; Fig. 2). Installation 3 had a small, more-or-less square-shaped treading floor that led into two small vats on opposite ends, and Installation 5, cut into earlier Installation 6, had a rectangular-shaped treading floor with rounded corners and a circular collecting vat with a small central depression (L122); Installation 7 had an irregularly shaped vat.

Installation 2 (Plan 1: Section 1–1) was cut into the treading floor of Installation 1, thus postdating it. It was more carefully hewn with a very small, shallow rectangular treading floor (L106; 0.9 × 1.5 m). The floor led down via one step into a small rectangular vat with a central circular depression (L123; 0.2 × 0.3 m, 1.3 m deep; Fig. 3). The vat exhibited patches of gray plaster, thus being the only installation with surviving evidence of plastering material.

The small flat surface of Installation 8, only partially excavated, was formed from a protruding rock; it had a deep round vat (L105; diam. 0.5 m, depth >1 m; Fig. 4). No collecting vat was found in Installation 9, and only part of its shallow treading surface (L102) was exposed, into which the shaft of Burial Cave C was cut (see below; Plans 1: Section 2–2; 2). Installation 10 comprised a large, squarish sloping treading floor (L128; 3.0 × 3.2 m), with a short rock-cut channel used to direct liquids into a squarish collecting vat (L104; 1.4 × 1.7 m). In the Roman period, this collecting vat was converted into the vertical shaft of Burial Cave B (see below; Plan 1: Section 3–3).

Only a few worn, non-diagnostic sherds, were retrieved in and around the installations, some of coarse ware with large grits characteristic of the Middle Bronze Age, and a few sporadic glazed sherds dated to the Mamluk period (not illustrated). The rock-cut pressing installations were mostly simple small winepresses, probably dating to the Middle Bronze Age or earlier.[5] The plastered vat of Installation 2, and the squarish form and relatively large dimensions of Installation 10, suggest that they may date later than the Middle Bronze Age.

---

[4] The outline of an additional rock-cut installation, badly damaged by the modern earthworks, could be discerned; this installation, into which the shaft of Cave A was installed, is not described here.

[5] The fact that the installations do not exhibit the more sophisticated features that have been shown to characterize Middle Bronze Age Ta'anakh winepresses in the Jezreel Valley region, suggests the possibility that they may have been of an earlier date (see Getzov, Covello-Paran and Tepper 2011).

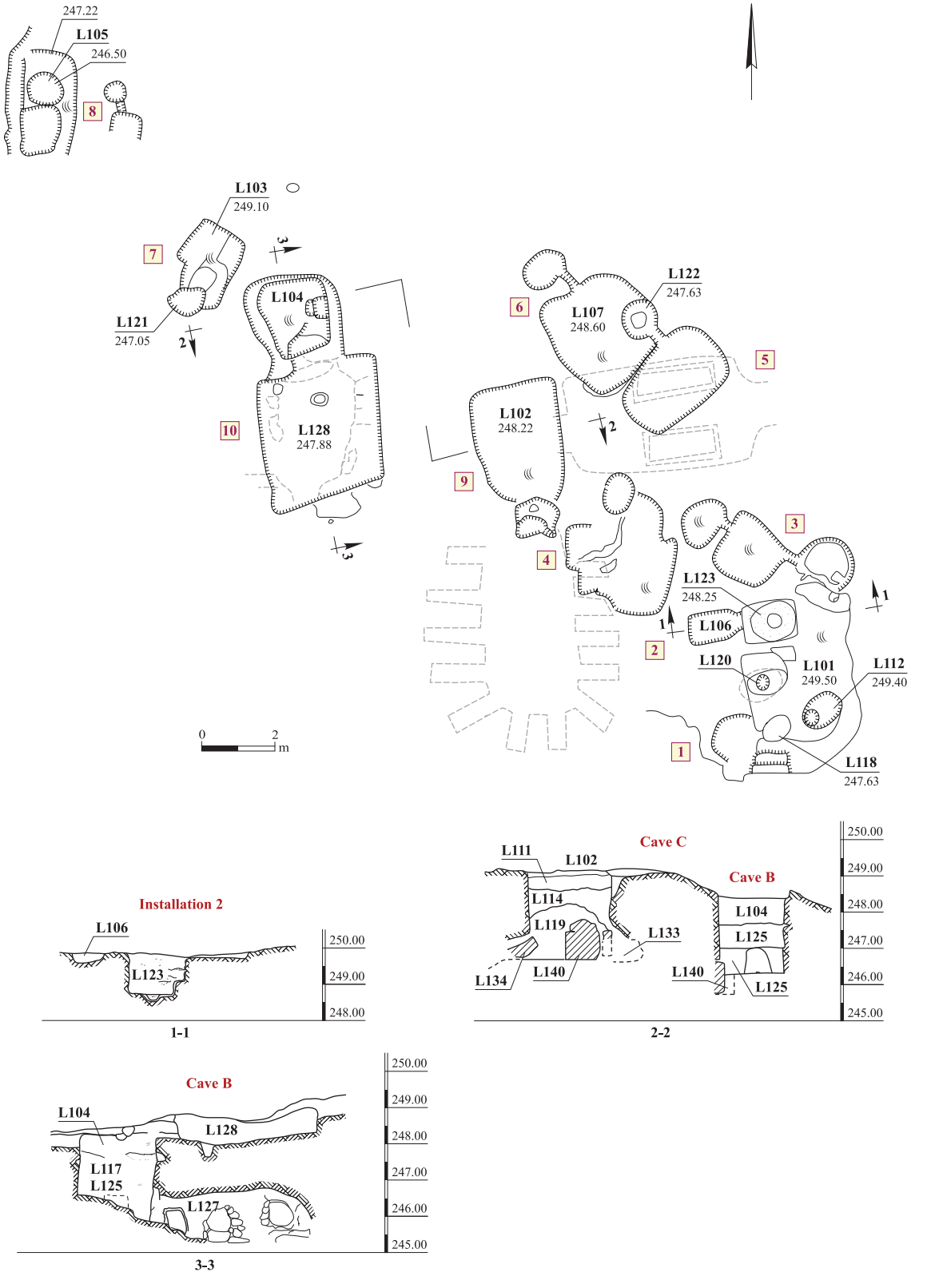

Plan 1. Installations 1–10, plan and sections.

Fig. 2. Installation 1, treading floor and oval vats, looking west.

Fig. 3. Installation 2, treading floor and plastered vat, looking east.

Fig. 4. Installation 8, collecting vat, looking west.

Roman-Period Burial Caves

The vertical entrance shafts of three burial caves were cut into the floors of the earlier rock-hewn installations: Cave A was cut into an installation which was badly damaged by modern earthworks; Cave B was cut into the collecting vat of Installation 10; Cave C was cut into the treading floor of Installation 9 (see Plans 1; 2). The carefully hewn, squarish shafts were large and fairly deep, with openings cut in the lower part of their walls which led into one or more burial chambers. The limestone rock surfaces of the caves were eroded, and much debris from the ceilings had collapsed into the chambers. The shafts were entirely exposed in the excavation, while much of the space of the chambers beneath them was not, and only some easily accessible intact vessels were retrieved from the unexcavated parts. It was evident from the state of the caves that they had been entered and plundered; the plundering probably occurred in antiquity, as no modern finds were found. The shafts and the burial chambers yielded a large number of mostly broken pottery vessels and many oil lamps. Several glass vessels and artifacts were retrieved (see Gorin-Rosen, this volume), as well as a few metal artifacts and a chalk-stone lid.

Cave A

Cave A was damaged by modern earthworks that cut the upper part of its squarish shaft (2.5 × 2.5 m, >2.8 m deep; Plan 2), hewn in hard *nari*; its lower part was cut in soft limestone. The uppermost accumulation layer in the shaft (L124) consisted of loose brownish soil that contained many pottery sherds, presumably the result of the robbing activities in the cave.

A slightly curved row of stones near the southern wall of the shaft may have delimited a levelled, packed-earth surface (L126) in front of the entrance into the cave's unexcavated southern burial chamber (Fig. 5). Several *in situ* broken pottery vessels, an intact cooking pot (Fig. 6) and some glass and metal artifacts were found on this surface. Inside the shaft,

Fig. 5. Cave A, Surface 126 in shaft defined by row of stones on right, with W136 on left, looking east.

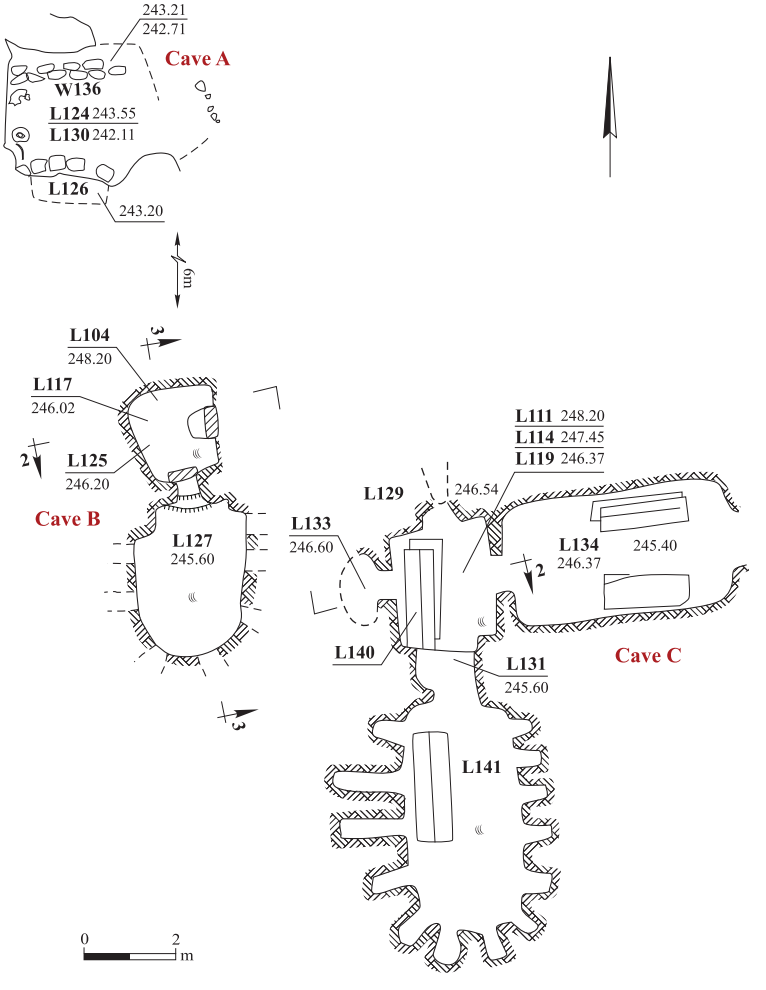

Plan 2. Burial Caves A–C, plan (for sections, see Plan 1).

Fig. 6. Cave A, cooking pot above Surface 126.

a wall built of three courses of small stones (W136; Fig. 5), may have been a partition or erected to block off an entrance into another burial chamber on the northern side of the cave. A lower accumulation layer within the shaft (L130), consisting of grayish soil and small stones, contained a large quantity of pottery vessels—among them many lamps (see Table 1)—and a few glass vessels (see Gorin-Rosen, this volume). The excavation did not reach down to the bedrock floor of the shaft.

Cave B

The vertical shaft (L104; 1.4 × 1.7 m, 2 m deep) of the cave was cut into the floor of Installation 10, converting the existing vat into part of the shaft (Plan 2). The shaft sides were carefully hewn, and a small ledge—cut into its western wall—probably served as a foothold; the bedrock floor (L125) sloped down to the south (Plan 1: Sections 2–2, 3–3). The fill within the shaft (L104, L117, L125) yielded pottery vessels, including several lamps (see Table 1), glass fragments (see Gorin-Rosen, this volume), and some human bones in disarray.

A rectangular opening in the lower eastern shaft wall, accessed via a rock-cut step, was blocked with a stone, beyond which a passage filled with earth was visible, but which was not excavated. A low arched opening in the shaft's southern wall (Fig. 7) was also blocked with a rectangular stone slab. The roughly carved burial chamber (L127; Fig. 8), whose southern end was found covered over with earth that had penetrated in from a crack in the rock above, was accessed through three steps that led down from the shaft's southern wall. Three *kokhim* (loculi) were cut in the chamber's eastern wall, two in its southern wall and

Fig. 7. Cave B, opening in southern wall of shaft, looking south.

two in its western wall. Some of the *kokhim* were blocked with fieldstones (Fig. 9) and others with one large stone slab; none were excavated. Several broken pottery vessels and lamps were found in the chamber.

Fig. 8. Cave B, Burial Chamber 127, looking south.

Fig. 9. Cave B, blocked *kokhim* in western wall of Burial Chamber 127, looking west.

Cave C

The rectangular shaft (2.2 × 2.6 m, 2.5 m deep) of this cave cut through the treading floor (L102) of Installation 9 (Plan 1: Section 2–2). Excavation of the shaft's fill (L111, L114, L119) down to the bedrock yielded several fragments of limestone coffins and a long, intact ashlar chalk-stone coffin with a gabled lid (L140; 2.4 m long; Fig. 10), which lay on the shaft bedrock, its southern end extending into an adjoining small space (L131). The undecorated coffin was full of earth, which yielded a metal cosmetic spoon (see Fig. 26:2), a copper alloy bell (see Fig. 26:3), a glass bracelet (see Gorin-Rosen, this volume: Fig. 4:1) and a few other glass fragments.

The shaft of Cave C had openings in all four walls. An entrance in the western wall, at floor level (Fig. 11), led into a small, amorphic carved recess (L133), which was blocked with a roughly worked stone slab. Partial excavation of the fill in the recess yielded some complete lamps and many human bones. It was surmised that the recess served as a repository for bones that were cleared out of the burial chamber to enable secondary use.

A small arched entrance in the shaft's northern wall led to a passage (L129) blocked with small and medium-sized stones. Removal of the stones revealed an underground passage (Fig. 12; not excavated).

Fig. 10. Cave C, Large stone coffin in Shaft 119, looking north.

Fig. 11. Cave C, opening into bone Repository 133, looking west.

Fig. 12. Cave C, arched entrance in northern wall of Shaft 119, looking north.

Fig. 13. Cave C, entrance in eastern wall of Shaft 119, looking east.

An entrance in the eastern wall (Fig. 13), partially blocked with a circular stone, led via a step down into a large, roughly hewn burial chamber with a partially collapsed vaulted roof (L134; 6.5 × 13.0 m, 1.5 m high). Two undecorated, ashlar chalk-stone coffins stood in the chamber, one without a lid, the other with a pushed-aside, gabled lid with bossed ends (Fig. 14)—no doubt evidence of tomb robbing activities. Earth had penetrated into the eastern end of the chamber (not excavated).

An opening in the southern wall of the shaft led via a small antechamber (L131) into a large burial chamber (L141), whose entrance was blocked with a roughly circular stone slab (diam. 1.8 m). The chamber's vaulted ceiling had partially collapsed. An undecorated chalk-stone coffin with a bossed gabled lid (0.75 × 2.00, 0.85 m high; Fig. 15) lay in the chamber,

Fig. 14. Cave C, Burial Chamber 134, looking east.

Fig. 15. Cave C, Burial Chamber 141, looking south.

and 13 *kokhim* were cut into its walls. While the chamber was not excavated, several pottery vessels were retrieved from it, including an intact juglet, oil lamps (see Table 1) and glass vessels (see Gorin-Rosen, this volume).

The Finds

Pottery Vessels

Early and Middle Roman-period pottery vessels retrieved from the three burial caves predominantly comprised cooking vessels and storage jars; also found were a few jugs and juglets and an appreciable number of oil lamps. Most of the vessels are familiar forms, with known parallels from published assemblages at stratified sites dating to the Early and Middle Roman periods.

The description of the pottery from Caves A (Figs. 16–19), B (Figs. 20, 21) and C (Figs. 22–25) is presented typologically, with reference to the illustrated vessels. The discussion focuses predominantly on the chronological range of the vessels and their regional distribution pattern. More detailed discussions and additional parallels may be found in the published pottery reports from which the parallels are taken. The main sources of parallels employed here for the pottery vessels are the corpus of Galilean Roman-period pottery (Díez Fernández 1983); the Kefar Ḥananya cooking-ware vessels (Adan-Bayewitz 1993); Ẓippori-Sepphoris (Balouka 2013); Bet She'arim (Avigad 1955); Ḥorbat 'Aqav at Ramat Hanadiv (Calderon 2000); Naḥal Ḥaggit, at the southern edge of the Carmel Range (Seligman 2010); and additional sites in the Carmel Range and Samaria Hills. Particularly pertinent here is the Middle Roman pottery assemblage from the Stratum II farmstead at Naḥal Ḥaggit in the southern foothills of the Carmel, as it is chronologically well-constrained between the late second and the late third centuries CE, its end date firmly established by numismatic evidence (Seligman 2010:104).

The most significant observation regarding this pottery assemblage is that it includes both forms integral to the Galilean repertoires of the Early to Middle Roman periods, and others characteristic of contemporary assemblages from Jezreel Valley and the southern margins of the Carmel Range.

Many of the vessels were examined by Anastasia Shapiro with a ×40 magnifying glass to ascertain the provenance of the wares, although no systematic petrographic analysis of the assemblage was undertaken.

Quantification of the frequencies of different vessel types and statistical analysis were not carried out, as the burial caves were only very partially excavated, and the pottery came mainly from disturbed layers in the shafts. The partial nature of the excavation further precludes attributing a significance to the absence of specific forms from the repertoires. Nevertheless, the relatively large quantity of oil lamps (90 specimens; see below), including both complete lamps and fragments, did allow an enumeration of the different types present in the assemblage (Table 1).

Cooking Wares

Many of the cooking vessels exhibit some soot marks, indicating that they were used for cooking, at least once.

Cooking Bowl (Fig. 20:1).— A shallow bowl made of the typical Roman-period cooking ware has two grooves on the exterior rim and loop handles. This bowl classifies as Kefar Ḥananya Form IB, its assignment to the Kefar Ḥananya potteries reinforced by microscopic examination of the ware. This vessel form first appeared in the late first or early second century CE, becoming common in second to third-century CE Galilean contexts, for example at Ẓippori (Adan-Bayewitz 1993:91–97; Balouka 2013:32–33, Pl. 8:25–27; 16:5–10).

Open Cooking Pots/Casseroles (Figs 16:1; 22:1–3).— The open cooking pots are of various forms. A large open vessel with ribbed sides has a cut rim and relatively small, upturned

horizontal handles (Fig. 16:1). Another smaller, open cooking pot with a shallower carinated body has a ledged-out rim and thicker, upturned horizontal handles (Fig. 22:3). An open cooking pot with a cut rim like that of Fig. 16:1 and fairly thick horizontal handles similar to those of Fig. 22:3, was found at Ḥorbat ʻAqav, where it was attributed to the first–second centuries CE (Calderon 2000:95–97, Pl. 3:53); a similar cooking bowl with upturned horizontal handles from Shiqmona is dated to the second century CE (Elgavish 1977:23, Pl. 4:20). Open casserole bowls exhibiting horizontal handles are a common component in the Stratum II assemblage at Naḥal Ḥaggit, attributed to the third century CE (Seligman 2010:106, Fig. 3.7:1–10), and also found in a cistern at Bet Sheʻarim, where they were dated between the third and early fourth centuries CE (Avigad 1955:209, Fig. 3:14).

The open cooking pot/casserole form with upturned horizontal handles is not part of the well-known repertoire of Early to Middle Roman-period cooking ware from the Kefar Ḥananya potteries, and probably originated from the Carmel Range and the adjacent coastal plain, where such vessels are known among assemblages of these periods. This basic vessel type only subsequently, around the mid-fourth century CE, became an integral part of the cooking ware repertoires of Galilee (Balouka 2004:40–42, Fig. 3:9; 2013:31, Fig. 29:8, 9).

Two open cooking pots with a mid-body carination and a ledged-out rim are made of orangey cooking ware (Fig. 22:1, 2). Early Roman (first–second centuries CE) open cooking pots found at Ḥorbat ʻAqav and Tel Mevorakh, the latter site located on the Carmel coastal plain, exhibit similar ledged-out rims, while their walls are more sharply carinated than those of the present examples (Rosenthal 1978:15, Fig. 2:7–9; Calderon 2000:95, Pl. 3:47). This vessel type is not a Kefar Ḥananya vessel in its form or ware. It is noteworthy that the characteristic Galilean open cooking pots of Kefar Ḥananya Forms 3A and 3B were not retrieved from the burial caves. This finding could indicate a preference for open cooking pots or casseroles from potteries located west of Nein, rather than from Galilee; however, the sample size is too small to determine if this is indeed the case.

Small Cooking Pot (Fig. 16:2).— A small, thin-walled cooking pot made of light brown ware has a squat ribbed body, an inner ridge at the base of the neck and two handles. Similar miniature cooking pots were found in Early and Middle Roman-period contexts at Ẓippori, dated to the second to third centuries CE (Balouka 2013:25–26, Pl. 8:17; 15:1–4), and at Karm er-Ras near Nazareth (Alexandre, forthcoming).

Globular Cooking Pots (Figs. 16:3–8; 20:2; 22:4–7).— Almost all the closed cooking pots are globular vessels with a more-or-less short neck and loop handles. Some pots (Figs. 16:3–5; 20:2), including one intact vessel (Fig. 16:3), classify as Kefar Ḥananya Form 4B, with two pronounced grooves on the flattened rim; they were manufactured of the characteristic Kefar Ḥananya ware used in producing cooking pots. The cooking pots of Kefar Ḥananya Form 4B are dated between the mid-first and the mid-second century CE (Adan-Bayewitz 1993:126–128).

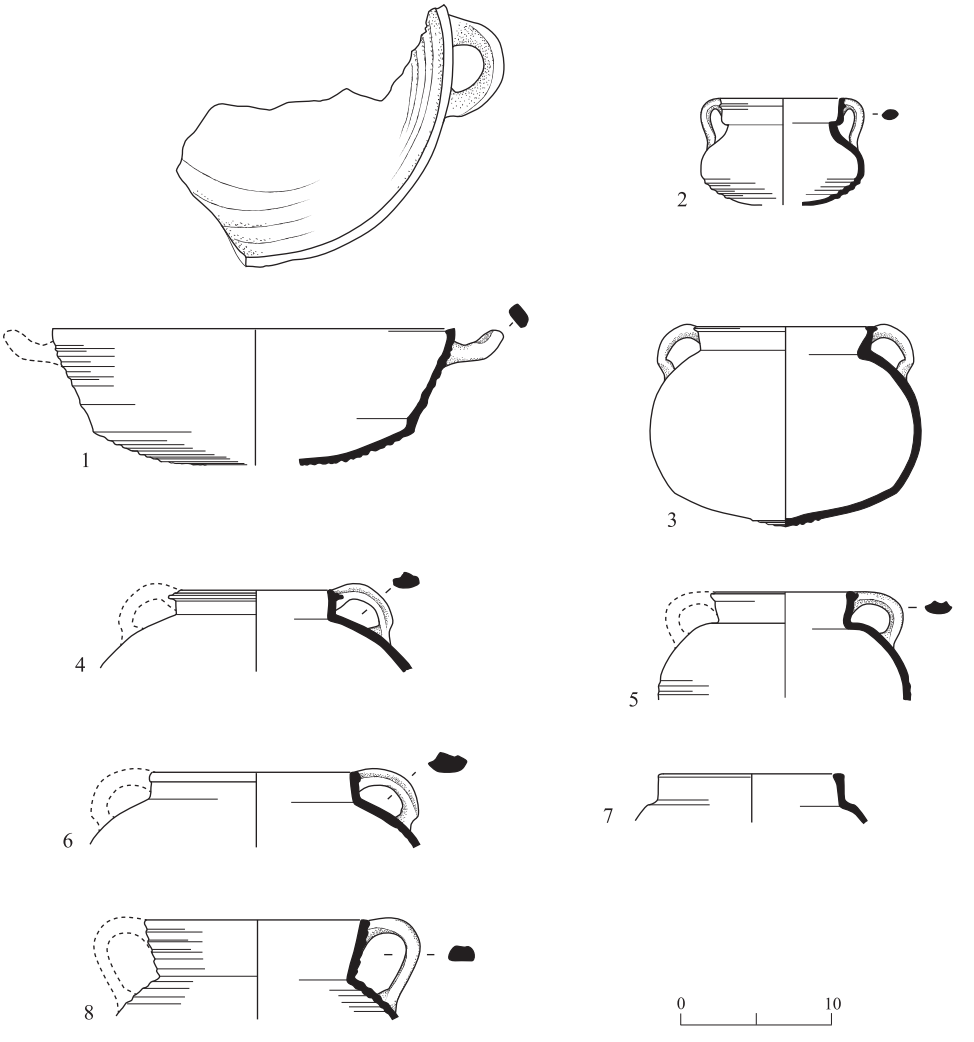

Fig. 16. Cave A: cooking vessels.

No.	Vessel	Locus	Basket	Description
1	Open cooking pot/casserole	124	1099/1	Reddish cooking ware
2	Small cooking pot	130	1146	Light brown cooking ware
3	Cooking pot	126	1133	Red cooking ware
4	Cooking pot	124	1107/1	Red cooking ware
5	Cooking pot	130	1143/1	Red cooking ware; grayish surface
6	Cooking pot	124	1072/1	Brownish-gray cooking ware; gray core
7	Cooking pot	126	1120/5	Orangey cooking ware
8	Cooking pot	116	1072/2	Reddish cooking ware

One vessel (Fig. 22:4) of a slightly larger size than the other globular cooking pots is fairly similar in form to Kefar Ḥananya Form 4B, but it has more pronounced grooves on the rim. This vessel, which was not a product of the Kefar Ḥananya potteries, was manufactured from a softer orangey cooking ware. The other short-necked cooking pots (Figs. 16:6, 7; 22:5–7), which likewise resemble Kefar Ḥananya Form 4B—although they are not assigned to that pottery group, exhibit a simple rounded rim, sometimes slightly thickened. They are also made of a different ware than that of the Kefar Ḥananya cooking pots, either an orangey colored ware (Figs 16:7; 22:5–7) or a heavier brownish-gray ware (Fig. 16:6). These pots may have been locally manufactured in Jezreel Valley or nearby regions, and the similarity in form with the vessels of Kefar Ḥananya Form 4B suggests that they were used contemporaneously with the latter. Abu Zedan, Alexandre and Syon (2022) note the coexistence of Kefar Ḥananya Form 4B cooking pots together with fairly similar cooking pots from non-Galilean potteries in the Early Roman building excavated at Nein. Fairly similar cooking pots, with a slightly higher neck, were also found in a burial cave in Qiryat Ṭiv‘on, at the western edge of Jezreel Valley, where they were attributed to the first and second centuries CE (Vitto 2011:41*, Fig. 21:1–3).

Figure 16:8, retrieved from a disturbed locus at the entrance to Cave A, has a higher neck than that of the other globular cooking pots shown here, which is also slightly flared-out and ribbed. This cooking pot has large loop handles and is made of reddish clay. It bears similarity to cooking pots assigned to a transitional period between the late Hellenistic and Early Roman periods, which predate the earliest production of Kefar Ḥananya cooking pots, found for example at Ẓippori (Balouka 2013:21, Pl. 1:16). This form is classified as Type T10.2, dated between the late first century BCE and the first century CE (Díez Fernández 1983:153).

Storage Jars

The many storage jars retrieved from the burial caves all had ribbed bodies and two loop handles on the shoulder. They include first-century CE jar forms, which are bag-shaped, relatively small and slim, and second to third-century CE forms, which are more barrel-shaped, probably having had a larger capacity than the bag-shaped forms.

Bag-Shaped Jars with Everted Wide-Band Necks (Figs. 17:1, 2; 20:3, 4).— A few bag-shaped jars retrieved from Caves A and B have a ribbed body, a slightly everted, lightly ribbed neck tapering to a simple rim, and an undercut at the juncture of the neck and the body, causing the neck to appear as a wide band. The jars are made of light brown or light reddish-brown ware with a gray core. These jars, designated Type T1.3 (Díez Fernández 1983:135), are the common jar form of Early Roman Lower Galilee, found for example at Ẓippori (Balouka 2013:37, Pl. 4:1–9, Type SJ I) and Karm er-Ras (Alexandre, forthcoming). These jars represent the earliest form of Early Roman jars in Galilee, and are dated between the second half of the first century BCE and roughly the time of the First Jewish Revolt in 67 CE.

Bag-Shaped Jar with a Straight Neck and Thickened Rim (Fig. 17:3).— This bag-shaped jar has an almost straight neck, with a slight ridge at its base, and a thickened rim with an inward-sloping lip. The rim form demonstrates that this is not a common Galilean jar type, and rather has parallels in Jerusalem, for example in the excavations along the Third Wall of Jerusalem, where such material was dated to the end of the Hellenistic and the Early Roman periods (Ben-Arieh and Netzer 1974:102, Fig. 4:1). Microscopic examination of the very light brown ware of this specimen reinforces its provenance in the Jerusalem area or the Judean Hills.

Thin-Walled, Ridge-Necked Jars with a Pronounced Interior Gutter at the Rim (Figs. 17:4; 20:5).— Of the many fragments of ridge-necked jars found in this excavation, only two have distinctly thin walls and a pronounced internal gutter at the rim. These jars are identified as Type T1.5 (Díez Fernández 1983:137), a very common form in Galilean sites, found for example at Ẓippori, where such material was dated between the late first and the end of the third centuries CE (Balouka 2013:37–38, Type SJ 2a); Capernaum, where the finds were dated to the Middle Roman period (Loffreda 2008:124–125, Type ANF 11); and Karm er-Ras (Alexandre, forthcoming). Similar jars were shown to have been manufactured at Shiḥin, near Ẓippori (Adan-Bayewitz and Perlman 1990: Fig. 3:3; Adan-Bayewitz and Weider 1992: Fig. 5:5).

Fig. 17 ▸

No.	Vessel	Locus	Basket	Description
1	Storage jar	130	1158/2	Light brown ware; gray core
2	Storage jar	130	1158/3	Light brown ware; gray core
3	Storage jar	130	1158/1	Very light brown ware; gray core
4	Storage jar	130	1158/4	Reddish-brown ware
5	Storage jar	126	1120/7	Reddish-brown ware
6	Storage jar	126	1120/9	Reddish ware; gray core
7	Storage jar	124	1107/2	Reddish-brown ware
8	Storage jar	124	1107/4	Reddish ware; gray surface
9	Storage jar	124	1107/3	Orangey-red ware
10	Storage jar	126	1120/2	Orangey ware
11	Jug	124	1099/2	Grayish-brown ware
12	Jug	126	1120/1	Grayish-brown ware
13	Juglet	130	1143/2	Light brown ware
14	Pilgrim flask	126	1120/8	Orange ware

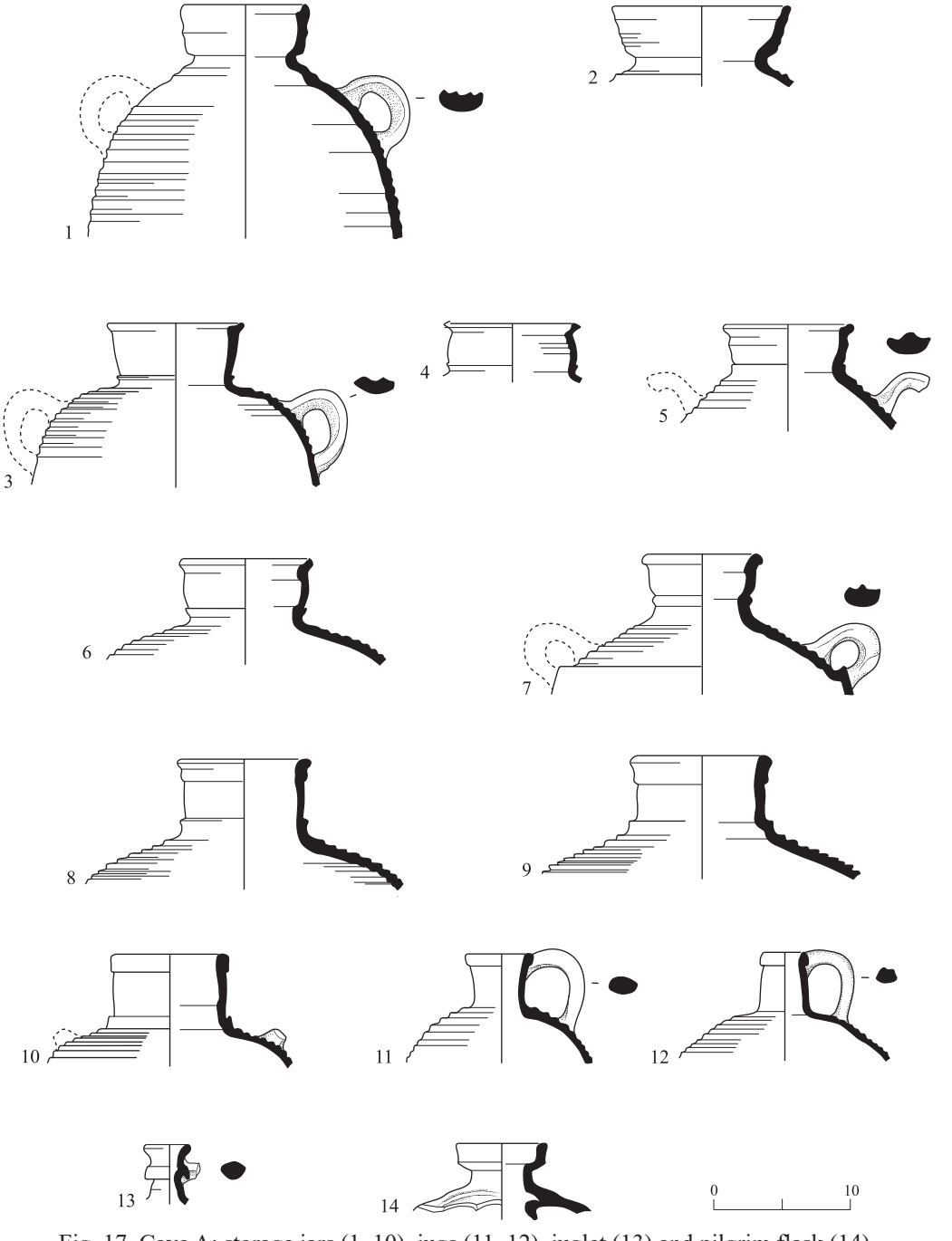

Fig. 17. Cave A: storage jars (1–10), jugs (11, 12), juglet (13) and pilgrim flask (14).

Thicker-Walled, Ridge-Necked Jars with an Interior Gutter at the Rim (Figs. 17:5–7; 20:6; 23:1–3).— These ridge-necked jars are fairly similar to the thin-walled form described above, except that they have slightly thicker walls, an everted rim and usually an interior gutter or ridge below the rim. Figure 17:5 has a shorter rim than the other examples shown here, while Fig. 23:2 has a comparatively less everted rim. These jars, designated Type T1.7, are a slightly later development of the thin-walled Type T1.5 jars (Díez Fernández 1983:139). They are common in Galilee, for example, at Ẓippori where they are dated between the second and the late third or early fourth century CE (Balouka 2013:38, Fig. 10:14, Type SJ 3), and Ḥorbat Ḥazon, where the assemblage is dated between the second and third centuries CE (Bahat 1974: Fig. 3:1–3). While the Ẓippori jars of this type were identified as a product of Shiḥin, the Nein jars are made of a different, coarser ware and hence, may have been manufactured in a different workshop.

Ridge-Necked Jars with an Out-Folded Rim (Figs. 17:8–10; 20:7; 23:4–10).— These fairly thick-walled, barrel-shaped jars have a ridge at the base of the neck and an out-folded rim. The rim fold of some of the specimens is longer and slightly more profiled (Figs. 17:8, 9; 20:7; 23:4–6) than in the others (Figs. 17:10; 23:7–10). Some of the jars with the longer rim folds (Figs. 17:8; 20:7; 23:6) are made of a reddish-brown, slightly metallic ware, possibly of the characteristic ware of Galilean jars of this period, and are similar to Type SJ4 jars found at Ẓippori, attributed to the third and the early fourth centuries CE (Balouka 2013:38–39). In comparison to the latter specimens, the jars with the shorter, simpler folded rims (Figs. 17:10; 23:8–10) are mostly made of a more orangey ware with a sandier texture. Díez Fernández (1983:142) classified the jars of various such forms of out-folded rims as Type T1.10, assigning the jars with the longer and more profiled folded rim to Galilee, and those with the simpler, shorter folded rim to regions outside Galilee, for example, Samaria (Díez Fernández 1983:125–127, 143); he dated all these jars between the second and third centuries CE. Fairly similar jars with a folded rim were found, for example, at Naḥal Ḥaggit (Seligman 2010: Fig. 3.11:4), Bet She‘arim (Avigad 1955: Fig. 3.7) and Jalame (Johnson 1988: Figs. 7-51:773–777; 7-53:803).

Jugs and Juglets

A few jugs and juglets of a variety of types were found. Two jugs made of a darkish brown clay have a globular ribbed body and a straight neck with a thickened rounded rim and a loop handle drawn from rim to shoulder (Fig. 17:11, 12). Similar jugs were found in a cistern at Bet She‘arim, located at the western edge of Jezreel Valley, where they were dated to the second and third centuries CE (Avigad 1955: Fig. 3:21), whereas this jug form is uncommon in the pottery repertoires of Galilean sites.

A ribbed jug has a high, slightly flaring neck, a double rim and an elongated loop handle drawn from rim to shoulder (Fig. 23:11); it is made of orange clay. The handle is disformed, suggesting that it may be a ‘waster.’ No exact parallel was found for this jug form.

An intact globular ribbed juglet has a narrow neck, a cup-shaped mouth and a flat base (Fig. 23:12). Similar juglets were found in Galilean sites, for example at Ẓippori, where it was noted that this juglet represents a common type from Judea, found especially in contexts dating from around the time of the First Jewish Revolt (Balouka 2013:45, Pl. 6:9–13).

A small juglet with an out-flaring rim and neck has a sharp, downturned mid-neck ridge (Fig. 17:13); it belongs to a type considered to have been manufactured at Shiḥin (Adan-Bayewitz and Weider 1992:196, Fig. 5:4). Such juglets are common in Galilee, for example at Yodefat (Adan-Bayewitz and Aviam 1997:142, Fig. 12:19) and Ẓippori, where such vessels were dated between the first and third centuries CE (Balouka 2013:45–46, Pl. 11:7–11).

Bottle

The narrow flaring neck of a bottle or small jar is made of orange clay (Fig. 20:8).

Pilgrim Flask

This fragment has a short neck with excess clay at its interior point of attachment and a cup-shaped mouth, probably representing a lenticular pilgrim flask (Fig. 17:14); it is made of the orange clay from which several other vessels described above were also produced. This is an uncommon vessel in Roman-period pottery repertoires. A similar flask, also exhibiting the excess clay at the attachment of the neck, was classified as Type T4.1, dated to the first century CE (Díez Fernández 1983:145).

Oil Lamps

About 90 complete lamps and lamp fragments were retrieved from the three caves, 43 in Cave A, 22 in Cave B and 25 in Cave C (Table 1). Thirty-six of the lamps are complete or almost complete, and most of the many lamp fragments are typologically diagnostic.

Table 1. Number of Lamps according to Types in Caves A, B and C

Lamp Type	Cave A	Cave B	Cave C	Total
Collar/boot-shaped lamps	1	5	-	6
Collar/boot-shaped lamp, Variant 1	-	1	-	1
Herodian knife-pared nozzle lamps	11	4	-	15
Northern ‘Darom’ lamps	6	-	-	6
Discus lamps	20	12	22	54
Circular lamp with heart-shaped nozzle	-	-	1	1
Karem al-Shaikh pear-shaped lamp	1	-	-	1
Pear-shaped lamps of the Samaria region	3	-	-	3
Other pear-shaped lamps	1	-	1	2
Other	-	-	1	1
Total	*43*	*22*	*25*	*90*

Almost all the lamps have soot marks from use around the nozzle hole. They are classified into seven main lamp types, two types—boot-shaped and pear-shaped—including variants. All the lamps are well-known Roman-period forms found in Galilee, Jezreel Valley and southern Mount Carmel, typically in burial caves. Twenty-two of the lamps are illustrated here, 11 from Cave A, 5 from Cave B and 6 from Cave C.

Parallels for the lamps cited below are predominantly from burial caves found in Galilee, southern Mount Carmel and Samaria and occasionally from stratified sites, such as Ẓippori (Lapp 2016), Ḥorbat ʻAqav (Calderon 2000) and Naḥal Ḥaggit (Seligman 2010).

Boot-Shaped Lamps (Figs. 18:1; 21:1).— Six boot-shaped, or ʻteapot,ʼ lamps were found in Caves A and B. These wheel-made lamps comprise a squat hemispherical receptacle with a flat or low ring base, a high everted collar and a wide, ridged strap handle extending from the rim down to the shoulder. The slightly elongated nozzle attached to the lamp terminates in a blunt tip. The lamps were manufactured of a reddish ware, similar to that of Roman-period wares produced in Galilee. It is observed that the handles were attached opposite the wick-hole, but slightly offside, demonstrating that the lamp was not very carefully assembled. Similar lamps have been found in settlements and in burial contexts in Lower Galilean settlement, for example, Nazareth (Bagatti 1969: Fig. 192:15; Feig 1990: Fig. 9:11), Kafr Kanna (Abu-ʻUqsa 2002: Fig. 7:4), Karm er-Ras (Alexandre, forthcoming), Khirbat Wadi Ḥamam (Gärtner and Leibner 2018:417–418) and the ancient boat at Ginnosar, on the Sea of Galilee (Sussman 1990:97–98, Fig. 12). These boot-shaped lamps are dated between the late first century BCE and c. 70 CE (Sussman 2012:75–77).

Collar-Shaped Lamp, Variant 1 (Fig. 21:2).— A wheel-made lamp from Cave B bears some similarity to the boot-shaped lamps, but it has a lower collar that descends toward a medium-sized filling hole, thicker walls, a disc base, a more rounded nozzle and no handle. This relatively rare lamp was found at Gamla (Terem 2008:53–54, Fig. 15) and at the Jewish Quarter in Jerusalem (Rosenthal-Heginbottom 2003:199–200), where these lamps were dated between the second half of the first century BCE and the late first century CE.

Herodian Knife-Pared Lamps (Figs. 18:2; 21:3).— Fifteen of these lamps were found in Caves A and B, several represented only by rim fragments. The lamps are wheel-made with a flat base and an attached knife-pared nozzle. They have a thin ridge around the filling hole. One lamp, manufactured from reddish clay, has an elongated nozzle with a groove incised across it (Fig. 18:2), while another has a shorter, wider knife-pared nozzle and is made of buff-colored, finely levigated clay (Fig. 21:3); none of the nozzles of the Nein knife-pared lamps are decorated with stamped circlets. Microscopic examination (Anastasia Shapiro, pers. comm.) of both the illustrated lamps indicated that the ware was similar to that of the Herodian lamps manufactured in Jerusalem.

The knife-pared nozzle lamps, ubiquitously found throughout Judea and Galilee, are dated between the late first century BCE and the early or mid-second century CE (Barag

Fig. 18. Cave A: oil lamps.

No.	Locus	Basket	Description
1	126	1184	Reddish ware; wheel-made; double ring base; attached collar; wide strap handle; soot
2	126	1125	Red ware; wheel-made; long spatulated nozzle; large nozzle hole; soot
3	130	1148	Fragment; gray metallic ware; mold-made; grape-bunch decoration in relief
4	130	1149	Light orangey-brown thin ware; mold-made; broken loop handle; fine olive branch decoration in relief; ring around filling hole
5	126	1129/1	Fragment; light orangey-brown ware; mold-made; circle decoration; one wing; lattice decoration on nozzle

and Hershkovitz 1994:24–58, Class C). They were found in previous excavations at Nein, within an Early Roman building (Abu Zedan, Alexandre and Syon 2022: Fig. 10:14, 15) and in burial caves (Dalali-Amos 2018: Fig. 8:12, 13), as well as at Nazareth (Bagatti 1969: Fig. 233:1–3), I‘bellin (Feig and Hadad 2015:99, Fig. 9), Kafr Kanna (Abu-‘Uqsa 2002: Fig. 7:4) and Ḥorbat ‘Aqav (Calderon 2000:101–102, Pl. V:90–92). A comprehensive analysis focusing on the knife-pared nozzle lamps has established that the Jewish population in Galilee showed a distinct preference for these lamps, manufactured in the Jerusalem area (Adan-Bayewitz et al. 2008).

Northern ‘Darom’ Lamps (Fig. 18:3–5).— Six lamp fragments of this type, also known as the Northern ‘Judean’ type, were found in Cave A. The fine, thin-walled lamps are mold-made, with flat or rounded shoulders and a low disc base. One such lamp has a broken small loop handle attached to its shoulder (Fig. 18:4), while another still has one wing of the splayed nozzle (Fig. 18:5). Some lamps bear a delicate vegetal pattern, clusters of grapes and vine leaves (e.g., Fig. 18:3), or a wreath made of an olive branch with olives and leaves, while others bear geometric decoration in a band on the shoulder surrounding the filling hole, alone or together with a delicate vegetal pattern (not illustrated). One fragment bears a lattice decoration on the nozzle (not illustrated). The lamps are made of different wares: gray metallic (Fig. 18:3) and light orangey (Fig. 18:4, 5), the vessels made of the latter ware were possibly manufactured in Shiḥin.

At Shiḥin, many unused lamps of this type were found together with several stone molds used to produced such lamps, in association with a small pottery kiln, presenting clear evidence of a pottery workshop at the site (Strange and Aviam 2017). Several lamps of this type were found at Khirbat Wadi Ḥamam (Gärtner and Leibner 2018:418–420). The Northern ‘Darom’ lamps are dated between c. 70 CE and the mid-second century CE (Strange and Aviam 2017:79).

A possible parallel for the decoration of a cluster of grapes (Fig. 18:3) may be found in a Northern ‘Darom’ lamp from I‘bellin (Feig and Hadad 2015: Fig. 12:20). An intact lamp resembling Fig. 18:4 in form and decoration was also found at I‘bellin, with the authors of that publication proposing that this type, rarely found in northern Israel, was manufactured in Jerusalem (Feig and Hadad 2015:103, Fig. 10).

Discus Lamps (Figs. 19:1; 21:4, 5; 24:1–3).— The discus lamps are by far the most common lamp type in the Nein burial caves, with 54 examples altogether. These small, mold-made lamps comprise a shallow, sharply carinated receptacle with a double ring on the flattish base and short rounded nozzles. The sunken discs in the Nein examples are all broken, probably deliberately (see below). Despite the damage to the lamps, it is sometimes possible to discern the decoration on the broken discs: a rosette in one case (Fig. 21:5), or a figurative design with asymmetrical protrusions in another instance (Fig. 24:2); in the latter case, especially, little remained of the decoration. A tiny circular filling hole is still visible in Fig.

Fig. 19. Cave A: oil lamps (cont.).

◂ **Fig. 19**

No.	Locus	Basket	Description
1	126	1124	Brown thin metallic ware; dark brown matt slip; mold-made; circular nozzle; broken sunken undecorated disc; volutes close to nozzle; double axe on either side; handle-less
2	124	1114	Light orangey-brown ware; rounded lamp bowl; pear-shaped around circular nozzle; very large filling hole; impressed geometric pattern; worn red slip, extant in impressed decoration; soot
3	126	1123	Orangey-brown ware; round lamp; large filling hole, surrounded by double circle; impressed decoration of volutes and ovolo on shoulder; worn red slip, extant in impressed decoration; double ring base and double diagonal lines around base of nozzle; soot
4	126	1136	Light brown ware; pear-shaped form; large filling hole; decoration of feint diagonal stroke around shoulder
5	124	1101	Brown coarse ware; coarse pear-shaped form
6	126	1122	Reddish ware; pear-shaped form; broken disc; possibly with decoration of radial sun rays

24:2. The lamp shoulders are decorated with palmettes (Fig. 21:4; 24:1, 3), ovoli (Fig. 21:5) or double axes (Figs. 19:1; 21:5; 24:2). Most of the illustrated lamps have double volutes on either side of a ladder pattern accentuating the nozzle.

The broken discus lamps at Nein have parallels at settlement sites, such as Ẓippori (Lapp 2016: Nos. 124–142), and many burial caves in Galilee and Jezreel Valley, for example, I‘bellin (Feig and Hadad 2015:110, Fig. 14), Kafr Kanna (Abu-‘Uqsa 2002: Fig. 7:6) and Ṭiv‘on (Vitto 2011: Figs. 23–26).

One large lamp (95 mm long) had a palmette pattern on the shoulder and a mostly encrusted *plantis pedis* stamp on the base (Fig. 21:4). Large, similarly decorated lamps were found at Ṭiv‘on (Vitto 2011:45, Fig. 23:3) and I‘bellin (Feig and Hadad 2015:110, Fig. 14:27).

The discus lamps examined here were almost all manufactured from fine, well-levigated buff or brownish clay, coated with a reddish, grayish or blackish matte slip and well-fired, rendering them a metallic appearance. One lamp is made of a heavier, redder clay than the others, and has the initials *beta* and *alpha* inscribed on its base (Fig. 24:3), which either designated a workshop mark or the potter’s initials (see Vitto 2011:48*). Microscopic examination of the ware indicated that none of the illustrated lamps of this type were locally produced; they are probably all imported, possibly from the Phoenician coastal region (Anastasia Shapiro, pers. comm.). The ubiquitous discus lamps are dated between the last quarter of the first century CE and the late second or even the early third century CE (Vitto 2011:48*). Various explanations have been offered for the common phenomenon of discus lamps with a broken discus. Examples of such lamps exhibiting

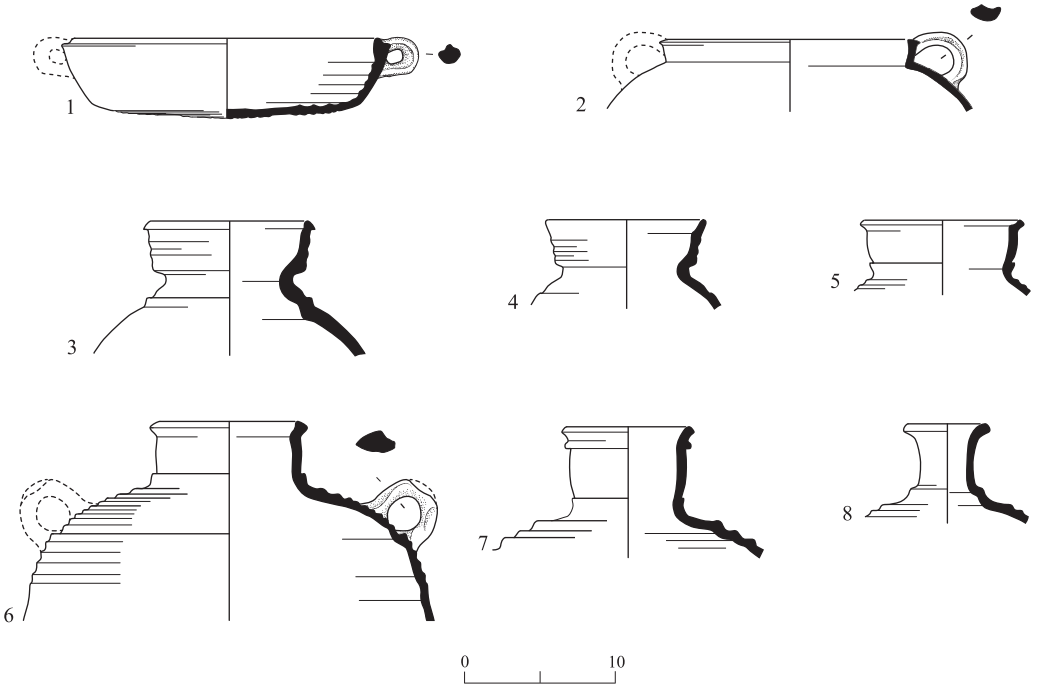

Fig. 20. Cave B: cooking vessels (1, 2), storage jars (3–7) and bottle (8).

No.	Vessel	Locus	Basket	Description
1	Cooking bowl	117	1094	Red cooking ware
2	Cooking pot	117	1084	Reddish-brown cooking ware
3	Storage jar	125	1113/2	Light brown ware; gray core
4	Storage jar	117	1085/1	Light reddish-brown ware; gray core
5	Storage jar	125	1113/1	Light reddish-brown ware
6	Storage jar	117	1187	Brown ware; gray core
7	Storage jar	117	1085/2	Orangey ware
8	Bottle	117	1106	Orangey-brown ware

mythical and erotic scenes, which have typically been found among pagan populations, were explained as the intentional mutilating of the pagan scenes by Jews and Samaritans, acting in accordance with religious injunctions (Vitto 2011:52*). At Ẓippori, where many lamps with both complete and broken discuses were found, the breaking of the discus was attributed to the need to create a larger filling hole (Lapp 2016:49). Broken discus lamps found at Apollonia, located on the coast south of Caesarea, were attributed to the actions of early Christians, breaking the discus as an expression of the triumph of monotheistic beliefs over paganism (Tal and Bastos 2012).

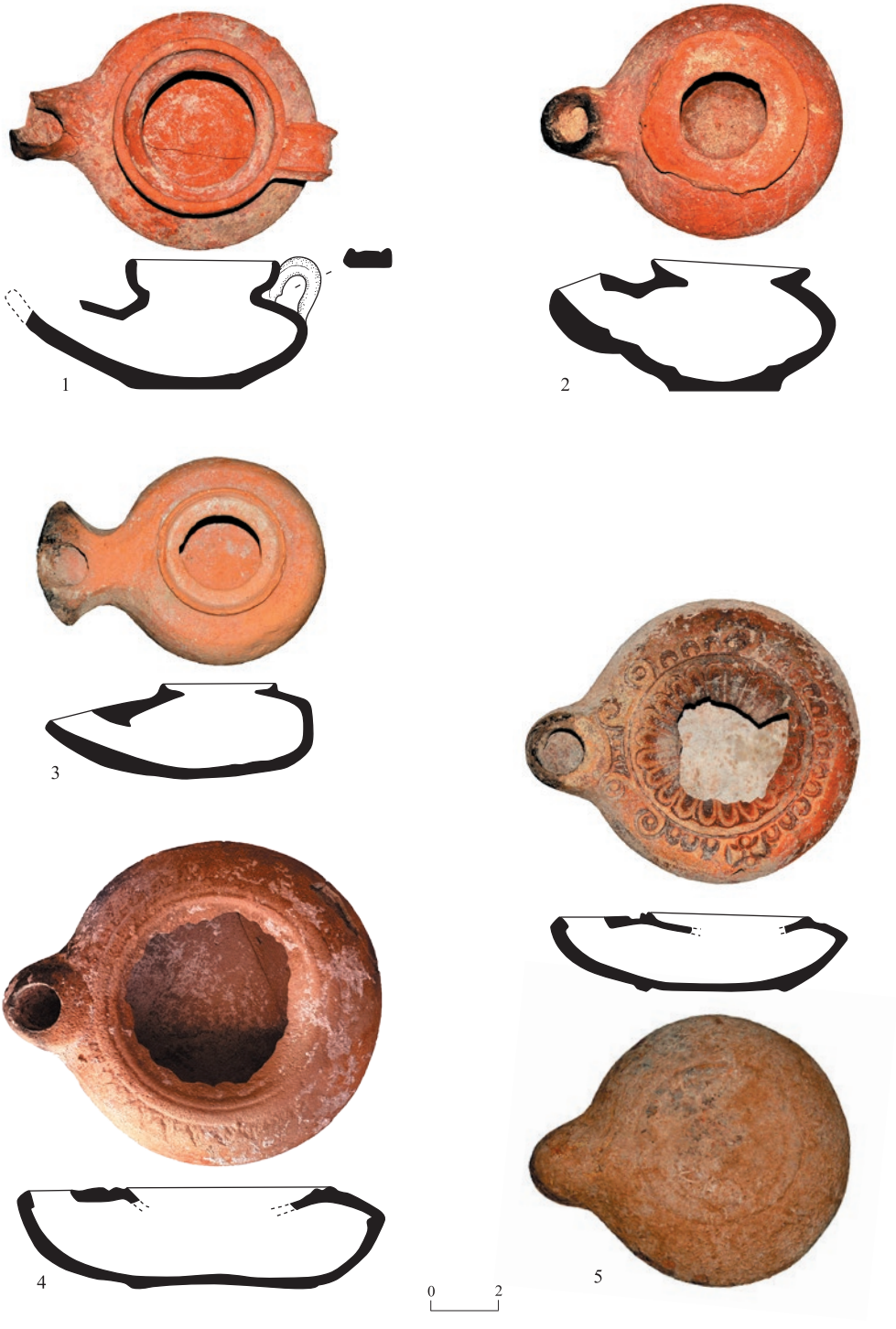

Fig. 21. Cave B: oil lamps.

◂ **Fig. 21**

No.	Locus	Basket	Description
1	127	1163	Red coarse ware; raised collar; strap handle; soot
2	127	1165	Reddish ware; low collar rim; no handle; soot
3	127	1164	Light brown ware; finely levigated; wheel-made; spatulated; splayed nozzle; raised ring around filling hole; soot
4	127	1170/1	Large lamp (10.5 cm diam.); broken sunken disc; circular nozzle; stamped palmette pattern on shoulder; worn red slip; narrow *planta pedis* on base
5	117	1111	Fine light brown ware; metallic ware; mold-made; round nozzle; broken sunken disc with radial pattern; double volutes; double axe and ovolo pattern on shoulder; red and brown matte slip

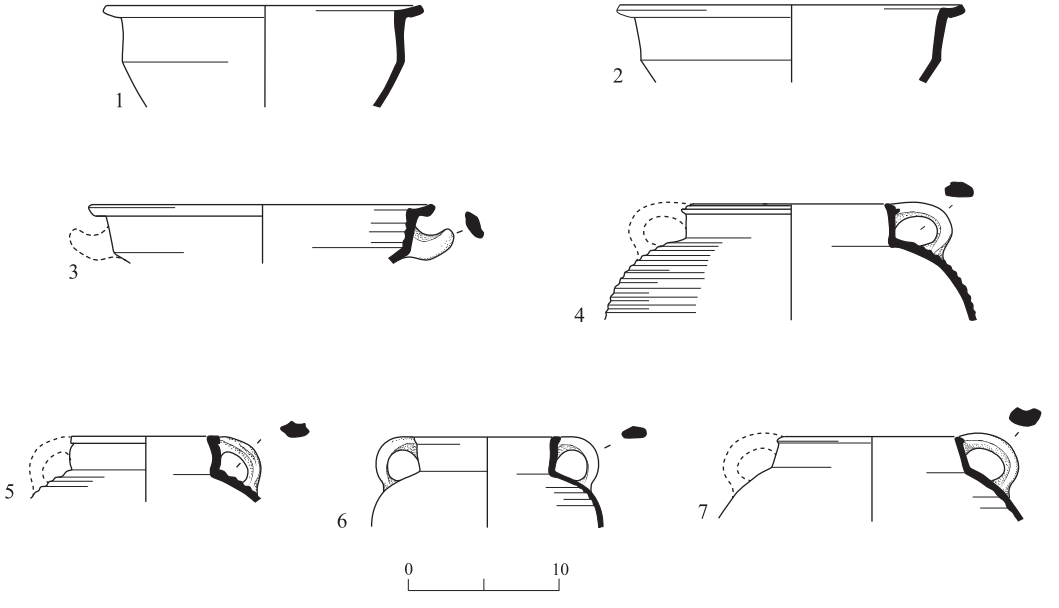

Fig. 22. Cave C: cooking vessels.

No.	Vessel	Locus	Basket	Description
1	Open cooking pot	119	1095/2	Orangey cooking ware; gray core
2	Open cooking pot	133	1173/1	Orangey cooking ware; light brown core
3	Open cooking pot	133	1173/2	Red ware; gray core
4	Cooking pot	119	1108/1	Orangey cooking ware
5	Cooking pot	131	1154/3	Orangey cooking ware
6	Cooking pot	119	1095/1	Orangey cooking ware
7	Cooking pot	119	1108/7	Orange cooking ware

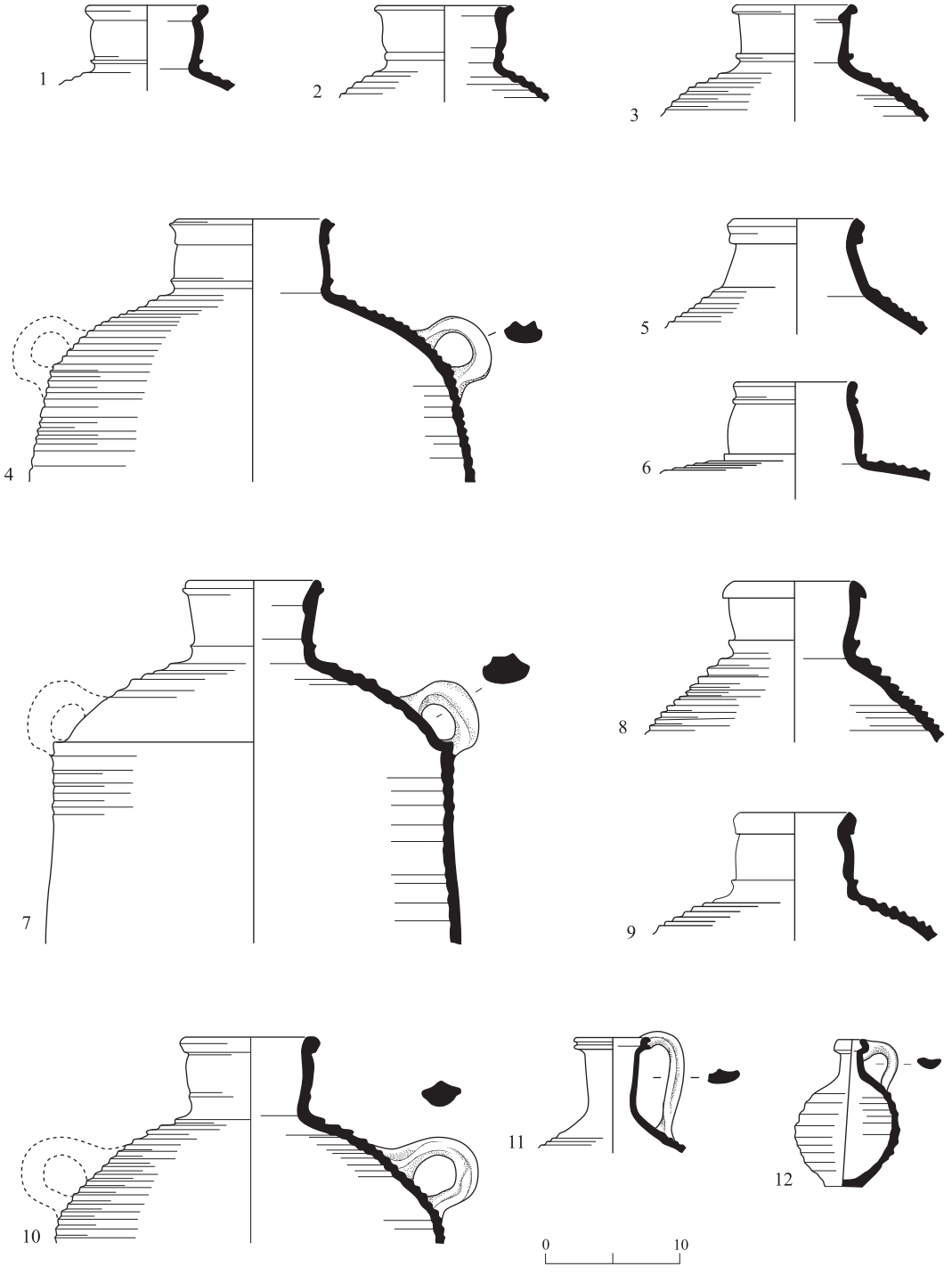

Fig. 23. Cave C: storage jars (Nos. 1–10), jug (No. 11) and juglet (No. 12).

◂ **Fig. 23**

No.	Vessel	Locus	Basket	Description
1	Storage jar	119	1108/9	Orangey ware
2	Storage jar	119	1108/3	Orangey ware
3	Storage jar	119	1108/2	Orangey ware
4	Storage jar	119	1108/8	Orange ware; gray surface
5	Storage jar	131	1159	Orange ware
6	Storage jar	119	1116/1	Orangey-brown ware
7	Storage jar	119	1108/6	Orangey-brown ware
8	Storage jar	131	1154/1	Reddish-brown ware
9	Storage jar	131	1154/2	Pinkish-brown; gray core
10	Storage jar	119	1108/5	Light brown ware
11	Jug	119	1116/2	Orange ware
12	Juglet	141	1182	Reddish-brown ware

Circular Lamp with Heart-Shaped Nozzle (Fig. 25:1).— A lamp from Cave C, comprising a circular receptacle, is knife-pared at the joint of its upper and lower halves. Its pronounced heart-shaped nozzle is raised, and it has a large, double-grooved knob handle extending above and below the receptacle. A large filling hole surrounds the hole. This lamp has deeply impressed palmettes stamped radially around the shoulder, and two rings around the slightly sunken disc. Two concentric circles are incised on the ring base. Many such lamps were found in tombs at ‘Araba (Tzaferis 1969: Pl. 18:5), and in a family tomb at Jebel Jofeh in Amman (Harding 1950: Pl. 25). Several lamps with heart-shaped nozzles and some of the other features of the present example, which are part of the Schloessinger Collection (Rosenthal and Sivan 1978:36–43), were identified as either imported lamps from Corinth, dated to the late first and the second centuries CE, or provincial imitations of the Corinthian lamps, which were manufactured contemporaneously with the Corinthian originals and continued to be produced into the third century CE (Broneer 1930:83, Pl. 10:505–525; Fig. 41:1, Type 25).

Pear-Shaped Lamps

Six lamps from Caves A and C were pear-shaped, or piriform, with the nozzle forming a linear continuation of the lamp’s receptacle, without a waist or projection in between them. This lamp type has several varieties.

‘Karm al-Shaikh’ Pear-Shaped Lamp (Fig. 19:2).— This pear-shaped lamp has a low ring base, and a large filling hole surrounded by a geometric design composed of triangles. It is made of light orangey-brown ware and coated with red slip. This lamp type is designated ‘Karm al-Shaikh,’ because such lamps were first identified as a distinct type in tombs at the site of Karm al-Shaikh, where the Rockefeller Museum in Jerusalem is located today

Fig. 24. Cave C: oil lamps.

◂ **Fig. 24**

No.	Locus	Basket	Description
1	119	1113	Light brown fine metallic ware; round/slightly oval nozzle; broken sunken disc with unidentified decoration; double volutes and palmette impressions on shoulder; double ring base; reddish and brown matte slip; soot
2	119	1117	Cream ware; broken sunken disc; round nozzle; small filling hole still extant; worn red slip; double volutes and double axe on shoulder; double ring base; soot
3	131	1162	Pinkish brown ware; broken sunken disc with unidentified decoration; round nozzle; double volute and palmette impressions on shoulder; worn red slip; double ring base; soot

(Baramki 1932: Pl. 6:11); it is dated to the second and the third centuries CE (Sussman 2012:69, Fig. 54:2, Type R28.2). A similar lamp, found in a fill which also contained Byzantine sherds at Bet She'an, was attributed to a later date, in the fourth–fifth centuries CE (Hadad 2002:24–26, No. 48).

Pear-Shaped Lamps of the Samaria Region (Fig. 19:3–5).— The broken filling hole of one pear-shaped lamp (Fig. 19:3) is surrounded by a double ring rim, with half-circle decorations around it. Its nozzle bears a ladder decoration between half-volutes, and its ring base is incised with double parallel oblique strokes. The lamp is made of orangey-brown ware, covered with a red slip that has become worn. Similar pear-shaped lamps were found at sites such as Naḥal Ḥaggit Stratum II, where they were securely dated by numismatic evidence to the third century CE (Seligman 2010: Fig. 3.13), and Geva' (Tell Abu Shusha) at the western edge of Jezreel Valley (Sussman 1988; 2012:70, Fig. 55:1, Type R29). Similar lamps from an unspecified archaeological context at Kibbutz Lehavot Ḥaviva were dated to the third and the fourth centuries CE (Sussman 1986: Pl. 78:14–17; 2012:70–71, 395, Nos. 640–643). While a date for this type in the third century CE appears secure based on the finds from Naḥal Ḥaggit, the specimens found at other sites may indicate continuity into the early fourth century CE (Sussman 2012:72), although the latter contexts are not stratified.

Two pear-shaped lamps were produced in worn molds (Fig. 19:4, 5), one with an extremely worn decoration of radial strokes (Fig. 19:4) and the other exhibiting no decoration (Fig. 19:5); the exterior surfaces of both these lamps are rounded due to the worn molds. Parallels for these lamps are known from Bet She'an, where they are classified with the Karm al-Shaikh lamps (Hadad 2002:24–26, Nos. 49, 51, 52). A similar, worn pear-shaped lamp, also undecorated, was found in a burial cave at Caesarea dated to the third and fourth centuries CE (Porath 2007: Fig. 9:20); this particular specimen had a broken filling hole. Other such lamps were found at Kibbutz Lehavot Ḥaviva near Caesarea (Sussman 1986: Pl. 77:7–10), Itamar in Samaria (Hizmi 1997b: Fig. 4:1, 2) and a burial cave at Talluza, also in Samaria (Hizmi 1997a: Fig. 5).

Fig. 25. Cave C: oil lamps (cont.).

No.	Locus	Basket	Description
1	131	1156	Orangey-red somewhat heavy ware; round lamp with triangular nozzle; palmette impressions on shoulder; filling hole, rounded by sunken margins; disc not sunken or broken; solid handle extending above lamp body and down to base; no sign of slip; soot
2	119	1112/1	Cream ware; small lamp; broken sunken disc; round nozzle; unclear impressed pattern on shoulder; soot
3	119	1112/2	Light orangey ware; round but irregular form; pear-shaped nozzle; broken filling hole; small lug handle on shoulder; soot

Other Pear-Shaped Lamps (Figs. 19:6; 25:2, 3).— One pear-shaped lamp made of a different ware than the other lamps of this shape, a reddish ware, had a broken disc, which originally seems to have exhibited a deeply impressed radial or rosette decoration (Fig. 19:6). Another pear-shaped lamp, made of a buffish ware, of which the surface is quite worn, may bear

decoration of circles(?) around the shoulder, and a possible radial decoration impressed on the broken discus (Fig. 25:2).

Another worn lamp has a rather elongated nozzle, a lug handle and a broken discus (Fig. 25:3). It bears some similarity to lamps found in Catacomb No. 12 at Bet She‘arim, where such lamps are securely dated to the mid-third century CE (Avigad 1976:24, Fig. 9:9, 11; Pl. 70:9–11).

Metal Artifacts (Fig. 26:1–3)

Two copper-alloy cosmetic spoons, or spatulas, were retrieved from the caves. One spoon from Cave A has a spatula-shaped end (Fig. 26:1); the other, found in the large limestone sarcophagus in Cave C, has a thickened knob at the end (Fig. 26:2). These spoons were used to extract kohl from glass kohl bottles (Feig and Hadad 2015:117–118). A small copper-alloy bell (diam. 1.5 cm) was found inside one of the Cave C coffins (L140; Fig. 26:3).

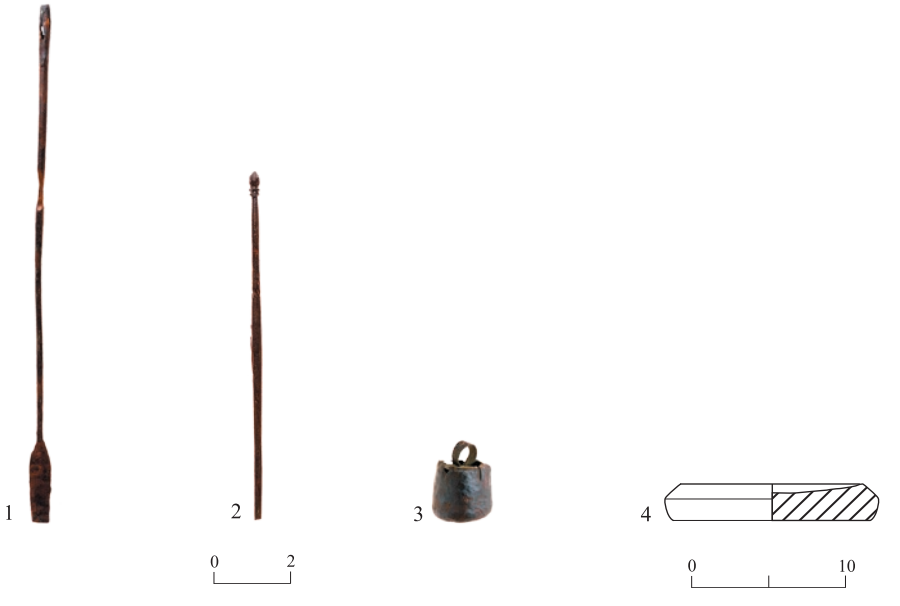

Fig. 26. Metal (1–3) and chalk-stone (4) artifacts.

No.	Vessel	Locus	Basket	Description
1	Cosmetic spoon	126	1180	Copper alloy
2	Cosmetic spoon	140	1178	Copper alloy
3	Bell	140	1179	Copper alloy
4	Lid	127	1121/1	White chalk

Chalk-Stone Lid (Fig. 26:4)

A fragment of a flat, circular chalk-stone lid was retrieved from the burial chamber (L127) in Cave B. Chalk-stone vessels and lids were widely used by the Jewish population in Roman-period Judea and Galilee, as these were considered suitable for observing ritual purity (e.g., Mishnah *Oholot* 18:1; Mishnah *Parah* 3:2).

Discussion and Conclusions

The earliest evidence of human activity on the exposed bedrock surface at Nein comprised at least ten, small rock-cut installations, composed of irregular-shaped, slightly sloping treading surfaces and small collecting vats. These were probably simple winepresses. No specific features of the installations contribute to determining their date, and only a few potsherds found in association with them may indicate a date in the Middle Bronze Age, or possibly earlier.

In the Early Roman period, the shafts of three burial caves were hewn into the rock surfaces of the earlier installations. The exploitation of ancient rock-hewn, winepress surfaces to form the vertical shafts of burial caves is well-attested in antiquity, for example, at Migdal Ha-ʻEmeq (Tatcher and Gal 2009:2*). The caves comprised a vertical shaft that led into two–four burial chambers. Access into the chambers was via low arched entrances cut into the lower part of the shaft walls. The entrances were blocked with a hewn stone slab, or a round roll-stone; one or more rough steps led down from the entrances into the roughly rectangular burial chambers. The burial chambers had multiple *kokhim* for depositing the deceased, and in some cases also undecorated ashlar stone coffins with gabled roof lids. Some of the human bones may have subsequently been collected in small recesses to make room for new burials, as in Cave C.

Parallels for the simple stone coffins with gabled roofs are known from Burial Cave No. 20 at Bet Sheʻarim, where 90 of the 125 stone coffins found were undecorated (Avigad 1976:136–137). The main difference observed between the Nein and the Bet Sheʻarim coffins is in the presence of decoration on the gabled lids in the latter case, mostly with rounded acroteria at the corners, as opposed to the simple lids at Nein.

No ossuaries were found in the Nein burial caves. The custom of secondary burial in ossuaries is considered to have been brought to Galilee by the Jewish refugees from Judea after 70 CE, and it may have continued into the third century CE (Rahmani 1994:24). However, the relatively small number of ossuaries that have been found in burial caves in Galilee, all dating to the late first or the second centuries CE, led to the understanding that this custom may have ceased in the second century CE (Aviam and Syon 2002). Vitto (2011:38*–39*) noted that two burial phases were observed in a burial cave of this period at Ṭivʻon, as well as in other Galilean burial caves: a first phase of use in the late first–second centuries CE, and a second phase in the third or fourth century CE, the ossuaries belonging to the earlier phase.

Grave goods retrieved from the Nein burial caves comprised mostly pottery vessels, as well as glass vessels and a few small metal artifacts. The pottery assemblages were composed mainly of cooking vessels, in addition to storage jars and a few jugs and juglets. The used condition of the cooking pots may indicate that they were part of a funerary meal in the burial ceremony, following which the vessels were interred with the deceased, possibly because they became impure through contact with the dead. The large number of lamps retrieved (n=90), is characteristic of Roman-period Jewish burials, for example, at I‘bellin, Tiv‘on and many other burial caves in Galilee (Sussman 2012:4).

The pottery retrieved from the three burial caves at Nein has an overall chronological range from the mid-first to the late third centuries CE. It was observed that the first-century CE vessels and lamps—including T1.3 storage jars and boot-shaped and Herodian lamps—were found in Caves A and B, but not in Cave C, whereas all three caves yielded vessels dating to the second and third centuries. Hence, Caves A and B may have been in use earlier and for a longer period than Cave C. With some reservation, due to the partial excavation of the caves, it is possible to propose that there may have been two burial phases in Caves A and B, an earlier phase in the first century CE, until c. 70 CE (or more specifically until the quelling of the First Jewish Revolt by the Romans in 67 CE), and a later phase in the second–third centuries CE.

Several lines of evidence suggest that use of the burial caves did not continue into the fourth century CE. While the few pear-shaped lamps retrieved may represent a broad chronological range, from the third into the fourth centuries CE, a firm date was obtained for such lamps from Stratum II at the farmstead site of Naḥal Ḥaggit (Seligman 2010:104), and there is, to date, no evidence from other stratified sites of the continued use of these lamps into the fourth century CE. The pear-shaped lamps produced in worn molds, in particular, probably had a relatively short chronological span of manufacture and hence, they are the least likely among this group of lamps to represent continued use into the fourth century CE. Moreover, the absence in the Nein burial caves of common fourth-century CE lamp forms, such as imitations of Bet Naṭṭif lamps and ‘Samaritan’ lamps (Hadad 2002:26–36, Types 17, 18), reinforces a date within the third century CE.

It is noteworthy that the glass vessels retrieved from the burial caves are also dated between the first and the third centuries CE (see Gorin-Rosen, this volume), generally reinforcing the overall chronological range assigned to the three caves based on the pottery finds.

A mixture of pottery wares from the Galilee and from the Jezreel Valley/southern Carmel regions is apparent among the cooking vessels, jars and jugs of the Middle Roman period, reflecting the location of the village of Nein at the junction of different geographical regions: Galilee with a predominantly Jewish population, and the Jezreel valley and southern Carmel area with a mixture of Jewish, Samaritan and pagan populations. The presence at Nein of vessels of Kefar Ḥananya manufacture indicates the relatively considerable distance over which they were transported (34 km).

A question arises as to whether and to what extent the pottery assemblages, especially the different lamp types, reflect the ethnic and/or religious affinities of Nein's Roman-period population. The large number of lamps retrieved from the caves allows us to determine that the assemblages are characteristic of Jewish burials. The Herodian knife-pared lamps, specifically those manufactured in Jerusalem, are typically Jewish, and demonstrate an affinity with the Judean Jewish population (Adan-Bayewitz et al. 2008), and the boot lamps are characteristically Jewish Galilean (Sussman 2012:77). The majority of the lamps found belong to the category of Roman-period disc lamps, of a broad Syro-Palestinian regional affiliation. The often-broken discs of these lamps may be an indication of a common practice attested in connection with Jewish and Samaritan burials to remove the parts of such lamps adorned with figurative, or perhaps even expressly pagan motifs. The few pear-shaped lamps retrieved from the caves may possibly have been types that originated in northern Samaria or the southern Carmel, where there were mixed populations of Jews and Samaritans, as well as pagans, and later Christians (Dar 2010:189–198).

The compiled evidence leads to an understanding that the Nein caves were family burial caves of the Early to Middle Roman periods, probably belonging to Jewish families who dwelled at Nein or in its vicinity. In the light of the archaeological evidence exposed in the admittedly partial excavation of the caves, it is only possible to speculate that there may have been a short break in the use of the caves following the First Jewish Revolt in 67 CE, possibly until the mid-second century CE. A very short break attributed to the time of the Revolt, followed by resettlement, was observed in the archaeological record at Karm er-Ras in Kafr Kanna (Alexandre, forthcoming). The presence of some Samaritan lamps in the caves may possibly point to the presence of a Samaritan population that had settled at Nein in the third century CE, but more substantial evidence is required to test this possibility.

Taken together, the Early and Middle Roman-period burial caves uncovered at Nein in the present excavation, and the previously unearthed remains of the Early Roman residence that was probably destroyed in the First Jewish Revolt (Abu Zedan, Alexandre and Syon 2022), attest to the existence of a Jewish village at Nein, certainly during the Early Roman period, and possibly later as well. The absence of Roman-period remains in the many previous salvage excavations conducted at Nein may be due to the small size of the Roman-period settlement, and/or the excavations not reaching the lowest levels and the bedrock beneath buildings from the Early Islamic, Mamluk and Ottoman periods.

References

Abu-'Uqsa H. 2002. Three Burial Caves at Kafr Kanna. In Z. Gal. *Eretz Zafon: Studies in Galilean Archaeology*. Jerusalem. Pp. 153–161 (Hebrew; English summary, p. 183*).

Abu Zedan F., Alexandre Y. and Syon D. 2022. An Early Roman-Period Residence at Nein and Episodes of the First Jewish Revolt in the Jezreel Valley. *'Atiqot* 107:1*–26* (Hebrew; English summary, pp. 271–272).

Adan-Bayewitz D. 1993. *Common Pottery in Roman Galilee: A Study of Local Trade*. Ramat Gan.

Adan-Bayewitz D., Asaro F., Wieder M. and Giauque R.D. 2008. Preferential Distribution of Lamps from the Jerusalem Area in the Late Second Temple Period (Late First Century B.C.E.–70 C.E.). *BASOR* 350:37–85.

Adan-Bayewitz D. and Aviam M. 1997. Iotapata, Josephus, and the Siege of 67: Preliminary Report on the 1992–94 Seasons. *JRA* 10:131–165.

Adan-Bayewitz D. and Perlman I. 1990. The Local Trade of Sepphoris in the Roman Period. *IEJ* 40:153–172.

Adan-Bayewitz D. and Wieder M. 1992. Ceramics from Roman Galilee: A Comparison of Several Techniques for Fabric Characterization. *JFA* 19:189–205.

Alexandre Y. 2000. Nein. *HA–ESI* 112:120*.

Alexandre Y. Forthcoming. *Cana of Galilee: Excavations at Karm er-Ras 1999–2011* (IAA Reports). Jerusalem.

Arav R. 1977. Kafr Nein. *HA* 61–62:13.

Aviam M. and Syon D. 2002. Jewish Ossilegium in Galilee. In L.V. Rutgers ed. *What Athens Has to Do with Jerusalem: Essays on Classical, Jewish, and Early Christian Art and Archaeology in Honor of Gideon Foerster* (Interdisciplinary Studies in Ancient Culture and Religion 1). Leuven. Pp. 151–187.

Avigad N. 1955. Excavations at Beth She‘arim, 1954: Preliminary Report. *IEJ* 5:205–239.

Avigad N. 1976. *Beth She‘arim* III: *Report on the Excavations during 1953–1958; Catacombs 12–23*. Jerusalem.

Bagatti B. 1969. *Excavations in Nazareth* I: *From the Beginning till the XII Century* (SBF Collectio Maior 17). Jerusalem.

Bagatti B. 2001. *Ancient Christian Villages in Galilee* (SBF Collectio Minor 37). Jerusalem.

Bahat D. 1974. A Roof Tile of the Legio VI Ferrata and Pottery Vessels from Ḥorvat Ḥazon. *IEJ* 24:160–169.

Baldi D. ed. 1955. *Enchiridion locorum sanctorum: documenta S. Evangelii loca respicienta*. Jerusalem.

Balouka M. 2004. The Pottery from the House of Dionysos. In R. Talgam and Z. Weiss. *The Mosaics of the House of Dionysos at Sepphoris Excavated by E.M. Meyers, E. Netzer and C.L. Meyers* (Qedem 44). Jerusalem. Pp. 35–46.

Balouka M. 2013. Roman Pottery. In E.M. Meyers and C.L. Meyers eds. *Sepphoris* I: *The Pottery from Ancient Sepphoris* (Duke Sepphoris Excavation Reports I). Winona Lake. Pp. 13–129.

Barag D. and Hershkovitz M. 1994. Lamps. In *Masada* IV: *The Yigael Yadin Excavations 1963–1965; Final Reports.* Jerusalem. Pp. 1–147.

Baramki D.C. 1932. Note on a Cemetery at Karm al-Shaikh, Jerusalem. *QDAP* 1:3–5.

Ben-Arieh S. and Netzer E.1974. Excavations along the ‘Third Wall’ of Jerusalem, 1972–1974. *IEJ* 24:97–107.

Broneer O. 1930. *Corinth* IV, II: *Terracotta Lamps*. Cambridge, Mass.

Calderon R. 2000. Roman and Byzantine Pottery. In Y. Hirschfield. *Ramat Hanadiv Excavations: Final Report of the 1984–1998 Seasons*. Jerusalem. Pp. 91–165.

Conder C.R. and Kitchener H.H. 1882. *The Survey of Western Palestine* II: *Samaria*. London.

Dalali-Amos E. 2018. Nein. *HA–ESI* 130 (March 30). http://www.hadashot-esi.org.il/report_detail_eng.aspx?id=25398&mag_id=126 (accessed October 3, 2017).

Dar S. 2010. Archaeological Aspects of Samaritan Research in Israel. In D.M. Gwynn and S. Bankert eds. *Religious Diversity in Late Antiquity* (Late Antique Archaeology 6). Leiden–Boston. Pp. 189–198.

Díez Fernández F. 1983. *Cerámica común romana de la Galilea: Aproximaciones y diferencias con la cerámica del resto de Palestina y regiones circundantes*. Madrid.

Elgavish J. 1977. *Archaeological Excavations at Shikmona* 3: *The Pottery of the Roman Period.* Haifa (Hebrew).

Feig N. 1990. Burial Caves at Nazareth. *'Atiqot* (*HS*) 10:67–79 (English summary, p. 17*).

Feig N. and Hadad S. 2015. Roman Burial Caves at I'billin. *'Atiqot* 83:93–123.

Gal Z. 1998. 8. *Map of Har Tavor (41), Map of 'En Dor (45)* (Archaeological Survey of Israel). Jerusalem.

Gärtner J. and Leibner U. 2018. Oil Lamps. In U. Leibner. *Khirbet Wadi Ḥamam: A Roman-Period Village and Synagogue in the Lower Galilee* (Qedem Reports 13). Jerusalem. Pp. 416–440.

Getzov N., Covello-Paran K. and Tepper Y. 2011. The "Taanach Winepress": Evidence of the Middle Bronze Age Wine Industry in the Jezreel Valley. *Eretz-Israel* 30:145–155 (Hebrew; English summary, p. 149*).

Gorin-Rosen Y. This volume. Glass Finds from the Roman-Period Burial Caves near Nein.

Guérin V. 1880. *Description géographique, historique et archéologique de la Palestine* III: *Galilee* II. Paris.

Hadad S. 2002. *The Oil Lamps from the Hebrew University Excavations at Bet Shean* (Qedem Reports 4). Jerusalem.

Harding G.L. 1950. A Roman Family Vault on Jebel Jofeh, ʿAmman. *QDAP* 14:81–94.

Hizmi H. 1997a. A Burial Cave at Talluza. *'Atiqot* 32:119–123 (Hebrew; English summary, p. 45*).

Hizmi H. 1997b. Burial Caves at Itamar. *'Atiqot* 32:87–90 (Hebrew; English summary, p. 41*).

Johnson B.L. 1988. The Pottery. In G.D. Weinberg ed. *Excavations at Jalame: Site of a Glass Factory in Late Roman Palestine*. Columbia, Mo. Pp. 137–226.

Lapp E.C. 2016. *The Clay Lamps from Ancient Sepphoris: Light Use and Regional Interactions* (Duke Sepphoris Excavation Reports II). Winona Lake.

Loffreda S. 2008. *Cafarnao* VI: *Tipologie e contesti stratigrafici della ceramica (1968–2003)* (SBF Collectio Maior 49). Jerusalem.

Mokary A. 2002. Nein. *HA–ESI* 114:110*–111*.

Oshri A. 2000. Nein. *ESI* 20:28*–29*.

Porat L. 2000. Nein. *HA–ESI* 111:6*–7*.

Porath Y. 2007. Burials from the Roman and Byzantine Periods at Caesarea. *'Atiqot* 55:45–56 (Hebrew; English summary, pp. 56–57).

Rahmani L.Y. 1994. *A Catalogue of Jewish Ossuaries in the Collections of the State of Israel.* Jerusalem.

Rosenthal R. 1978. The Roman and Byzantine Pottery. In E. Stern. *Excavations at Tel Mevorakh (1973–1976)* I: *From the Iron Age to the Roman Period* (Qedem 9). Jerusalem. Pp. 14–19.

Rosenthal R. and Sivan R. 1978. *Ancient Lamps in the Schloessinger Collection* (Qedem 8). Jerusalem.

Rosenthal-Heginbottom R. 2003. Hellenistic and Early Roman Fine Ware and Lamps from Area A. In H. Geva. *Jewish Quarter Excavations in the Old City of Jerusalem Conducted by Nahman Avigad, 1969–1982* II: *The Finds from Areas A, W and X-2. Final Report*. Jerusalem. Pp. 192–223.

Seligman J. 2010. The Pottery. In J. Seligman. *Naḥal Ḥaggit: A Roman and Mamluk Farmstead in the Southern Carmel* (IAA Reports 43). Jerusalem. Pp. 97–150.

Strange J.R. and Aviam M. 2017. Shiḥin Excavation Project: Oil Lamp Production at Ancient Shiḥin. *Strata BAIAS* 35:63–99.

Sussman V. 1986. A Collection of Oil Lamps from Lehavot Haviva. In S. Dar and Z. Safrai eds. *Shomron Studies*. Tel Aviv. Pp. 195–205 (Hebrew).

Sussman V. 1988. Lamps from Geva (Abu-Shusha). In B. Mazar ed. *Geva: Archaeological Discoveries at Tell Abu-Shusha, Mishmar Ha'Emeq*. Jerusalem. Pp. 89–119 (Hebrew).

Sussman V. 1990. The Lamp. In S. Wachsmann. *The Excavation of an Ancient Boat in the Sea of Galilee (Lake Kinneret)* (*'Atiqot* [*ES*] 19). Jerusalem. Pp. 97–98.

Sussman V. 2012. *Roman Period Oil Lamps in the Holy Land. Collection of the Israel Antiquities Authority* (BAR Int. S. 2447). Oxford.

Tatcher A. and Gal Z. 2009. The Ancient Cemetery at Migdal Ha-'Emeq (el-Mujeidil). *'Atiqot* 61:1*–47* (Hebrew; English summary, pp. 131–132).

Terem S. 2008. *The Oil Lamps from the Excavations at Gamla*. M.A. thesis. Bar Ilan University. Ramat Gan (Hebrew).

Tal O. and Bastos M.T. 2012. Intentionally Broken Discus Lamps from Roman Apollonia: A New Interpretation. *Tel Aviv* 39:104–114.

Tzaferis V. 1969. Tombs in Western Galilee. *'Atiqot* (*HS*) 5:72–79 (Hebrew; English summary, p. 9*).

Vitto F. 2011. A Roman-Period Burial Cave on Ha-Ḥoresh Street, Qiryat Tiv'on. *'Atiqot* 65:27*–61*.