'Atiqot 114, 2024

Late Byzantine and Early Islamic Glass from eṭ-Ṭuweiri: A Rural Site in Western Galilee

Yael Gorin-Rosen[1]

The glass assemblage from the 2007 excavation at eṭ-Ṭuweiri, was studied in comparison to the previously published assemblage from the 2004 excavation at the site. Most of the finds from the 2007 excavation were retrieved from the winepress in Area A, whereas only a few items were discovered in Area B. The assemblage consists mainly of wineglasses, bottles and oil lamps, alongside decorated vessels, windowpanes, a stirring rod and glass tesserae. Both excavations yielded the remains of glass production, likely associated with a local manufacturer that may have been involved with the construction of the nearby church uncovered in 2004. The glass artifacts from both excavations faithfully represent the regional glass repertoire of the Byzantine and Early Islamic periods.

Keywords: Byzantine period, Umayyad period, glass, wineglasses, oil lamps, tonged decoration, stirring rod, glass production

Introduction

Large quantities of glass fragments were found at the site, relative to the limited size of the excavation (see Syon, Getzov and Daniel, this volume).[2] The material from the 2007 excavation at eṭ-Ṭuweiri is presented below and compared to the previously published assemblage from the 2004 excavation at the site by H. Smithline (Gorin-Rosen 2007). The glass retrieved from both excavations faithfully represents the Byzantine- and Early Islamic-period glass repertoire in the region. The 2007 material considered hereby originated mainly from the winepress in Area A, with only a few finds from Area B. Although only few glass assemblages from rural sites in Western Galilee were published so far, the types identified at eṭ-Ṭuweiri are also well-known from other regions of Israel. The vessels are presented below in chronological and typological order, followed by a discussion of their context.

---

1 Dr. Yael Gorin-Rosen, Israel Antiquities Authority.

2 I wish to thank Danny Syon, for inviting me to publish this assemblage and providing me with all the relevant information, and Hagit Tahan-Rosen, for drawing the vessels. Special thanks are due to Lior Weissbord for his careful editing.

THE GLASS VESSELS

The late Byzantine and Early Islamic glass from the 2007 season presents a combination of vessel types known from other sites in the region, e.g., Umayyad-period contexts at Bet She'an (Hadad 2005; Winter 2011) and late Byzantine and early Umayyad assemblages at Ḥammat Gader (Cohen 1997), Tiberias (Lester 2004; Hadad 2008) and Caesarea (Pollak 2003; Israeli 2008). Parallels from sites located nearer to eṭ-Ṭuweiri than those mentioned above are known from the burial caves at Khirbat el-Shubeika (Gorin-Rosen 2002) and the Courthouse Site in 'Akko (Katsnelson 2016). The description below is divided into three sections, based on chronological considerations: (1) vessels broadly assigned to the late Byzantine–Umayyad period—these are presented together with a very small number of vessels strictly dated to the Byzantine period; (2) vessels that first appeared in the Umayyad period—some of these remained in use in the Abbasid period; and (3) special finds, including remains of glass production.

Late Byzantine–Umayyad Periods

Bowls

Bowl with Out-Folded Rim (Fig. 1:1).— Only a small number of specimens of this type were found in the excavation. This bowl type is known from the Late Roman to the late Byzantine and early Umayyad periods, and was especially common in the early part of this time span. During the Byzantine period, bowl-shaped vessels with such rims and three handles, identified as oil lamps, were quite common (Katsnelson 2016:82–83, Fig. 3.9:53, 54, and see further references therein). Umayyad-period bowls of this type are known from Ramla (e.g., Gorin-Rosen 2016:44, Fig. 1:3, 4, see references therein to parallels from Ramla, Khirbat eth-Thahiriya and Bet She'an).

Wineglasses

Two subtypes of wineglasses, with plain (Fig. 1:2) or decorated (Fig. 1:3, 4) rims, were identified. The rims of both subtypes are rounded, slightly incurving and thickened. While both subtypes are fairly common, the plain-rim wineglasses are somewhat more so. Both are known from the Byzantine and the Umayyad periods.

Also included among the finds from eṭ-Ṭuweiri are wineglass bases: a few small fragments of a tubular bases in a very fragmentary condition (Fig. 1:5) and solid bases (Fig. 1:6–8), which were more frequent and better preserved than the specimens of the former subtype. Tubular bases are strictly known from the Byzantine period, when they are a rather common find, while solid bases are mainly known from the end of the Byzantine period and the Early Umayyad period.

All the subtypes presented below have parallels in the excavations of the pottery workshop in the Bet She'an theater, built around 700 CE and destroyed by the earthquake of 749 CE (Winter 2011:246–359, Fig. 12.1:3–9, and see further references therein).

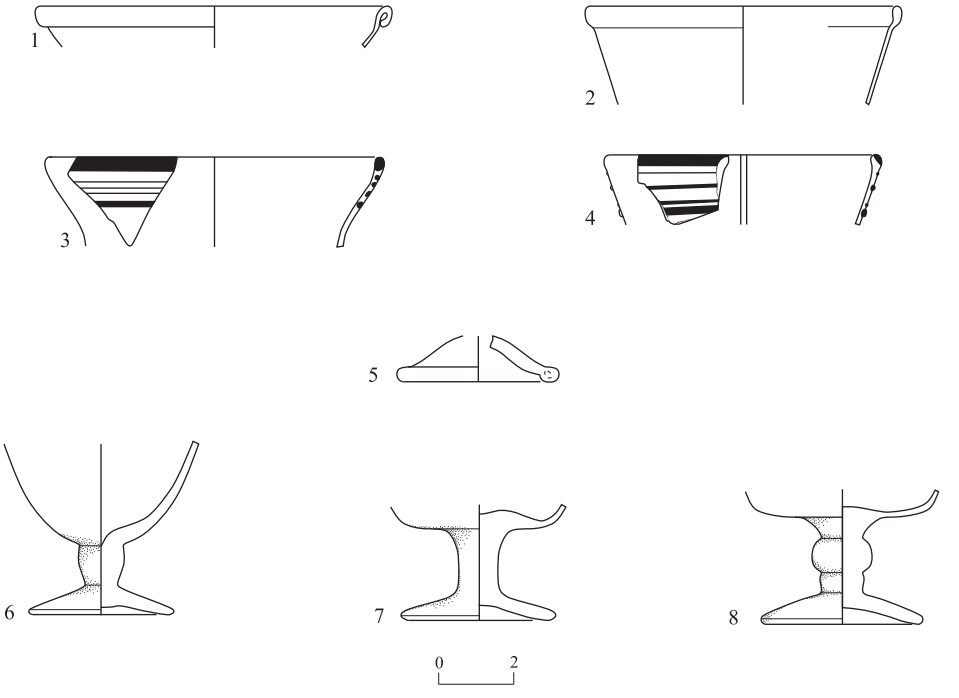

Fig. 1. A bowl and wineglasses.

No.	Vessel	Locus	Basket	Color	Weathering	Notes
1	Bowl	109	1079/3	Bluish green		
2	Wineglass	125	1080/2	Greenish blue		Clear, good quality
3	Wineglass	125	1076	Light bluish glass with turquoise trails		Good workmanship
4	Wineglass	109	1037/3	Bluish green with turquoise trails		The turquoise trails include red veins
5	Wineglass	109	1037/2	Bluish green	Silver weathering, sand deposits	
6	Wineglass	109	1079/1	Bluish	Sand deposits	Clear, bubbly glass
7	Wineglass	109	1079/2	Bluish	Sand deposits	Clear, bubbly glass; tooling marks on the base
8	Wineglass	109	1032	Bluish green	Silver weathering, pitting	Tooling marks on the base; remains of glass from the pontil

Wineglass with Plain Rim (Fig. 1:2).— This rim is characterized by a thickened rounded edge and a slightly incurving, slanting wall. It represents the most common type of wineglass of the Byzantine period in Israel and throughout the Byzantine Empire. A wineglass with a rim of this type and a solid base was found in Burial Cave 2 at Khirbat el-Shubeika, dated

to the late Byzantine–Early Umayyad period (Gorin-Rosen 2002:314, 316, Fig. 7:36), and similar examples were found at Khirbat el-Baṭiya, Upper Galilee, dated to the same period (Gorin-Rosen 2006:29*, Fig. 1:3–5).

Wineglasses with Rims Decorated with Fused-In Trails (Fig. 1:3, 4).— Wineglasses with applied horizontal trails of different colors, usually in hews of blue or turquoise, were common during the sixth and seventh centuries CE, continuing into the Umayyad period and disappearing thereafter. A rim with fused-in trails was unearthed in Cave 1 at Khirbat el-Shubeika, together with other glass vessels characteristic of the late Byzantine and Umayyad periods (Gorin-Rosen 2002:301, Fig. 7:56). A wineglass with fused-in trails was also found at Ẓippori (Gorin-Rosen 2010a: Fig. 16:5). It was at one time suspected that this type of decorated wineglass was mainly manufactured at glass workshops in Jerusalem and the surrounding areas, where numerous examples of such vessels belonging to several variants were discovered, e.g., an assemblage from the sixth–seventh centuries at Binyene Ha-Umma (Gorin-Rosen 2005:201–203, Fig. 2:20–24, and see additional examples therein). However, finds from other parts of the country that have been unearthed in recent decades suggest a wider geographic area for their production.

Wineglasses with Tubular Ring Bases (Fig. 1:5).— The distribution of this type is very wide. Similar bases have been found in sites such as the Byzantine church at Shave Ẓiyyon (Barag 1967:67–68, Fig. 16:15, 17), ʻAkko (Katsnelson 2016:84, Fig. 3.9:59, 60) and Shiqmona (Gorin-Rosen 2010b:213, Fig. 2:6, 7, with further references therein to Nazareth, Kh. Tinani in Haifa and Jerusalem, as well as to Syria, Lebanon and Jordan).

Wineglasses with Solid Bases (Fig. 1:6–8).— Many subtypes of this wineglass type are known, differing in the shape of the foot and the body. The item in Fig. 1:6 is characterized by a short, thick cylindrical foot and an ovoid body, while that in Fig. 1:7 has a cylindrical foot and body, with the preserved part from the beginning of the body being wider than that of Fig. 1:6. The item in Fig. 1:8 is characterized by a beaded foot and a body similar to that of Fig. 1:7.

This type first appeared in the Byzantine period and became especially popular in the late Byzantine and Umayyad periods. Parallels are known from various sites, e.g., Burial Cave 2 at Khirbat el-Shubeika (Gorin-Rosen 2002:314, 316, Fig. 7:36, and see further discussion therein), ʻAkko (Gorin-Rosen 2012: Fig. 8:4) and Shiqmona (Gorin-Rosen 2010b:213, Fig. 2:8, and see further references therein to Qasṭra, Tinani and other sites near Haifa). Two wineglasses with such body shapes, one globular and the other conical, were found in a church at Khirbat al-Karak (Delougaz and Haines 1960: Pl. 60:16, 17, respectively), dated to the seventh century CE based on the glass assemblage (Barag 1970:115), and in another church at Kursi (Barag 1983: Fig.9:9). Other examples were found at Khirbat el-Baṭiya, Upper Galilee (Gorin-Rosen 2006:32*, Fig. 1:9–10) and Ẓippori (Gorin-Rosen 2010a: Fig. 16:6, 7).

Bottles

Bottles with Upright Infolded Rims (Fig. 2:1, 2).— This thickened, infolded rim-type belongs to a bottle with a cylindrical mouth and a neck, either with no delineation between them or a narrower one. This type of rim first appeared in the Late Roman period, became common in the Byzantine period and increased in popularity in the Umayyad period. A similar bottle was found in the Byzantine-period church at Shave Ẓiyyon (Barag 1967:65–66, Fig. 16:1). Such bottles were also found in Burial Caves 1 and 2 at Khirbat esh-Shubeika (Gorin-Rosen 2002:297–298, Fig. 6:43; 306–307, Fig. 2:9, and see further references therein) and in the

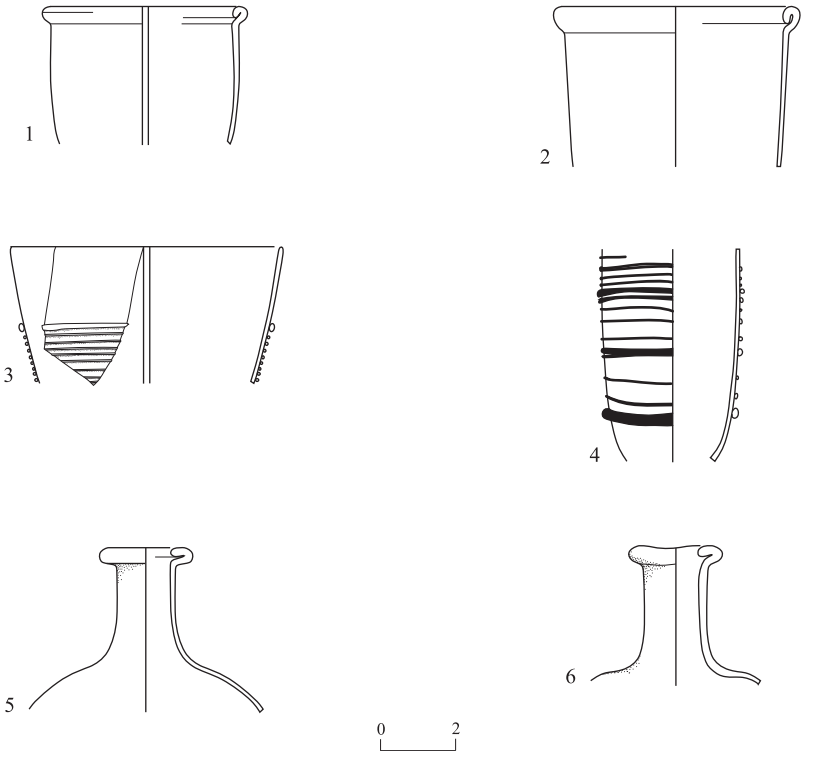

Fig. 2. Bottles.

No.	Locus	Basket	Color	Weathering	Notes
1	109	1037/1	Light bluish green	Silver weathering, sand deposits	
2	125	1080/1	Greenish blue	Sand deposits	
3	114	1088	Light bluish green	Slight iridescence, lime and sand deposits	Vessel and trails of the same color
4	110	1018/2	Bluish green with turquoise trails	Sand deposits	Bubbly glass with blowing spirals
5	114	1088	Bluish green	Silver weathering, sand deposits	Uneven infolded rim
6	120	1103	Bluish green	White enamel-like weathering, sand deposits	Bubbly glass with impurities; uneven infolded rim

‘Akko Courthouse Site (Katsnelson 2016:84, Fig. 3.9:61). Umayyad-period examples are known from various excavations in Bet She’an, e.g., the paved street (Peleg 1994: Fig. 15:6, 7) and other parts of the ancient city (Hadad 2005: Pls. 8:158–164; 9:170–175).

Bottles with Applied Horizontal Trail Decoration below the Rim (Fig. 2:3, 4).— Bottles decorated in this manner were common in the Late Roman and Byzantine periods, and continued to be produced in the Early Islamic period, although the late examples differ from their predecessors in their designs, fabric and workmanship. The fragments found from eṭ-Ṭuweiri represent various subtypes of such bottles, assigned to the late Byzantine and Umayyad periods.

The bottle in Fig. 2:3 has a funnel mouth decorated with multiple thin trails wound around it. Finds of similar bottles demonstrate the wide distribution of this subtype. Four bottles with such trail decoration on the mouth/neck were found in Burial Cave 2 at Khirbat esh-Shubeika (Gorin-Rosen 2002:316–317, Fig. 8:39–42). Other examples were found in Cave 1071 at Qasṭra (Gorin Rosen 2013:105, Fig. 25:20, 23, 24). The bottle in Fig. 2:4 has a long cylindrical neck decorated with multiple, alternating thick and thin trails. This subtype was likewise very common during the period in question, with a number of examples found in Umayyad-period contexts at Bet She’an (Hadad 2005: Pl. 12:223–227, 231).

Bottles with Infolded Flattened Rim (Fig. 2:5, 6).— Bottles with this rim type, usually dated to the Umayyad period, are characterized by a short neck and a globular or squat body; they represent a common find in glass assemblages of the period. A complete example of such a bottle is known from Burial Cave 2 at Khirbat esh-Shubeika (Gorin-Rosen 2002:316–317, Fig. 8:37, 38, and see further discussion therein). The upper part of such a bottle was found at Aḥihud, with other glass vessels dated to the late Byzantine and Umayyad periods (Porat and Getzov 2010: Fig. 7:2). This type is common in Umayyad-period contexts at Bet She’an, where complete bottles were among the glass finds (Hadad 2005:23–24, Pls. 9:182–184; 10:185–190; 11:191–195; Winter 2011:348, Fig. 12.1:10, 11; Katsnelson 2014: Fig. 7:2, and see further references therein).

Bottles with Wavy Trail Decoration (Fig. 3:1, 2).— Horizontal wavy trails of variable thickness and workmanship are applied to these bottles’ mouth or neck. Bottles decorated in this fashion are especially common during the transition from the Byzantine to the Early Islamic period, the seventh and early eighth centuries CE. Figure 3:1 represents a bottle with a tall narrow neck, with an applied thin wavy trail, while Fig. 3:2 has a wider neck and a thicker trail. Bottles with this type of decoration were found in Cave 1 at Khirbat esh-Shubeika, together with a group of vessels dated to the late Byzantine and Early Islamic periods (Gorin-Rosen 2002:300–302, Fig. 7:61, 62). Examples with both narrow and wide necks were found in large quantities in Umayyad-period contexts at Bet She’an (Hadad 2005: Pls. 13:262–269; 14:270–277; 19:358–361; Winter 2011:348–349, Fig. 12.1:18–20; Katsnelson 2014:37*–38*, Fig. 7:7, 8). Additional parallels are known from Qasṭra Cave

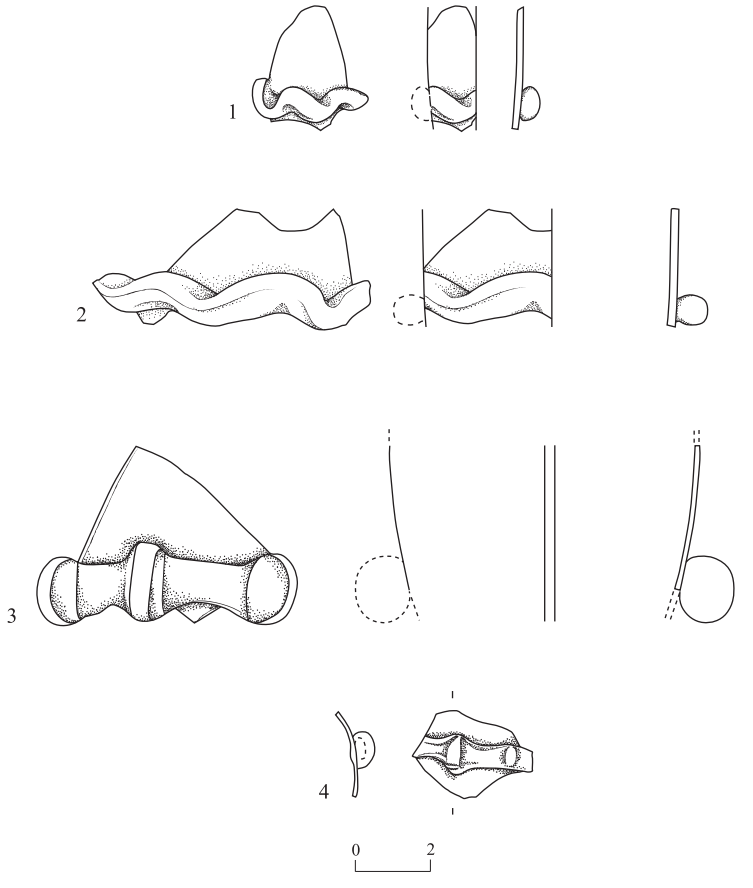

Fig. 3. Bottles (cont.).

No.	Locus	Basket	Color	Weathering	Notes
1	112	1013/1	Greenish	Black and silver weathering	Vessels and trail of the same color
2	112	1013	Bluish green	Sand deposits	Black impurities; tooling marks on trail
3	114	1070/2	Bluish	Sand deposits	Black impurities; tooling marks on trail
4	154	1162/2	Indistinct	Black thick crust over a thin gold coating	

1071 (Gorin-Rosen 2013:105, Fig. 26:26–28) and Ramla (Gorin-Rosen 2016:49, Figs. 3:21–23; 5:34, and see further references therein).

Bottles with Tooled-Out Trail Decoration (Fig. 3:3, 4).— The trails applied to these bottles, which vary in thickness and quality of workmanship, were tooled out and pinched to create protruding bosses around the neck. The fragment in Fig. 3:3 was part of a wide funnel mouth, with a very thick, tooled-out trail. The neck of such a bottle was found in an Umayyad-period assemblage at a site near Ramla (Gorin-Rosen 2016:49, Fig. 3:24). A complete

vessel bearing such decoration, held at the al-Sabah Collection, Kuwait, was assigned a Syrian provenance and dated to the seventh–eighth centuries CE (Carboni 2001:39, Cat. No. 1.5). This common type of decoration with protruding pinches is known also from the loop handles of other vessels of the Early Islamic period, for example, a handle from Bet She'an (Hadad 2005: Pl. 21:399, Umayyad period; Pl. 45:945, Abbasid–Fatimid periods). Figure 3:4 is a shoulder fragment, bearing an applied tooled-out trail. Similar specimens, bearing several such trails, were found in Umayyad-period contexts at Bet She'an (Hadad 2005: Pl. 14:281, 282).

Oil Lamps

Bowl-Shaped Oil Lamp with Hollow Stem (Fig. 4:1–3).— These fragments comprise a complete, long hollow stem (Fig. 4:1), a deformed stem (Fig. 4:2) and a piece of a bowl-shaped oil lamp with a hollow stem, broken at one end (Fig. 4:3). The deformation of Fig. 4:2 may be due to a failure in the production process, or to its subsequent exposure to fire. It is noteworthy that deformed vessels were also found at eṭ-Ṭuweiri in the 2004 excavation (Gorin-Rosen 2007).

Fig. 4 ▸

No.	Vessel	Locus	Basket	Color	Weathering	Notes
1	Oil lamp	109	1064	Bluish green	Sand deposits	Slightly constricted in the upper part that connects to the bowl; pontil scar with traces of glass
2	Oil lamp	109	1092	Light bluish	Silver weathering	Knocked-off at bottom
3	Oil lamp	114	1070/1	Bluish green	Slight silver weathering, sand deposits	Bubbly glass
4	Oil lamp	110	1040	Greenish blue	Silver weathering, iridescence, pitting	Knocked-off at bottom
5	Oil lamp	109	1037	Bluish green	Slight silver weathering	Bubbly glass; knocked-off at bottom
6	Bowl	110	1018/1	Colorless with greenish tinge	Lime deposits	Low quality glass with many impurities
7	Bottle(?)	109	1060	Colorless with greenish tinge	Black enamel-like weathering, severely corroded	Small scar on appliqué/base
8	Handled vessel	135	1104	Olive-green glass	Sand deposits	Bubbles and impurities
9	Stirring rod	146	1113	Bluish green with dark trail	Silver weathering, iridescence, pitting	Broken on both sides
10	Tessera	154	1116/1	Indistinct	Severely corroded	Two-layers, the upper one poorly preserved; cut corners

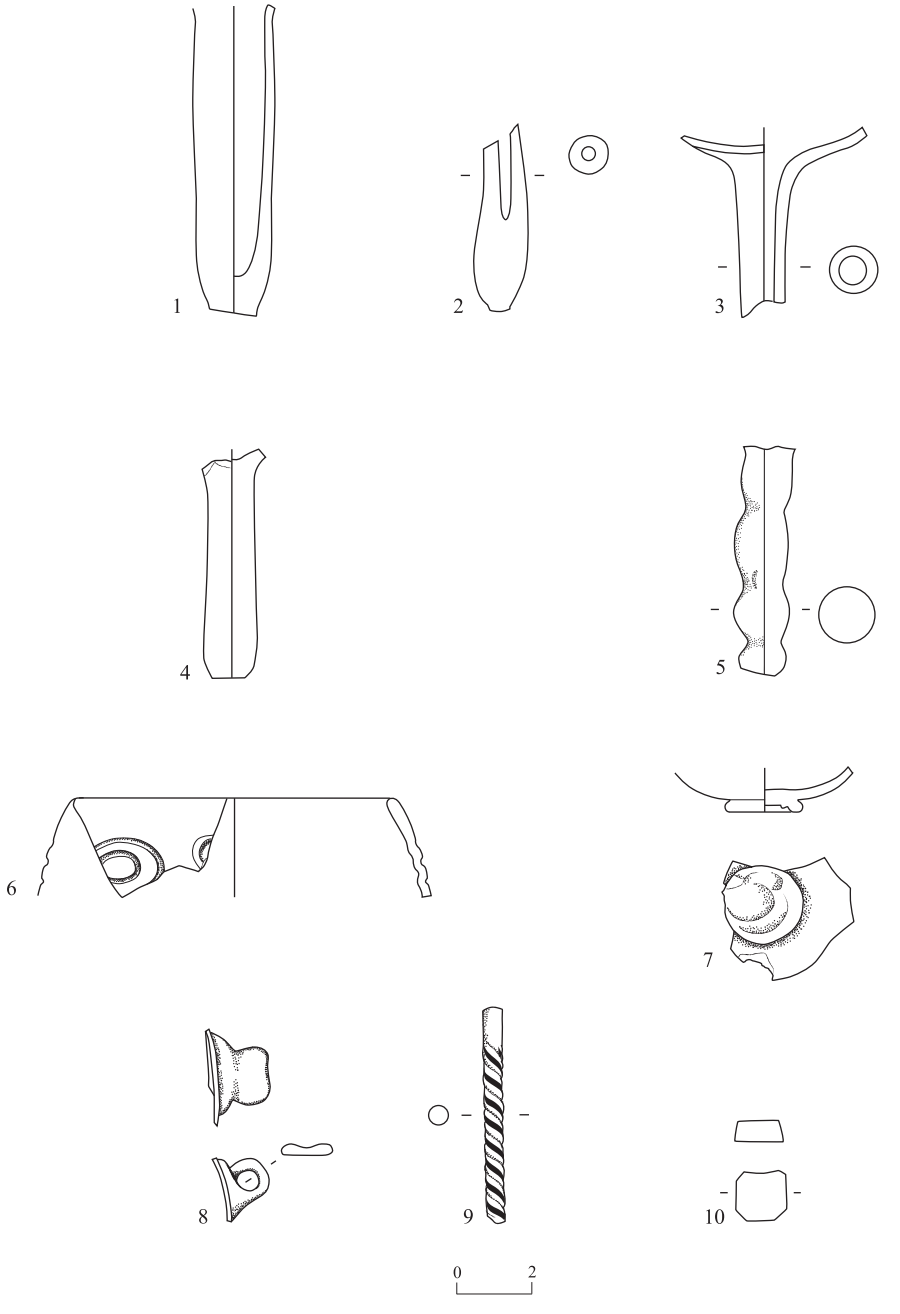

Fig. 4. Oil lamps, decorated vessels, stirring rod and tessera.

This type was very common during the Byzantine period, known for example from the Byzantine church at Shave Ẓiyyon (Barag 1967:68–69, Fig. 16:25) and Ḥorbat ʻUẓa (Gorin-Rosen 2009:97–98, Fig. 2.55:8, and see further references therein to finds from Caesarea, Jerusalem and Ashqelon).

Bowl-Shaped Oil Lamp with a Solid Stem (Fig. 4:4).— A complete, long solid stem with the beginning of its body was found. This type was common during the Byzantine period, usually found together with hollow-stem oil lamps.

Bowl-Shaped Oil Lamp with a Solid Beaded Stem (Fig. 4:5).— Locally produced oil lamps with this type of stem became popular in the late Byzantine–Umayyad periods. Such oil lamps were found in large quantities and were widely distributed in Israel and the surrounding countries, e.g., at Shiqmona (Gorin-Rosen 2010b:213–214, and see further references therein to material from Bet She'an, Qasṭra, Bat Gallim and Tinani, as well as to sites in Lebanon and Jordan). A glass workshop producing such oil lamps was uncovered in Beirut (Foy 2000:242–247, Figs. 4:6–10; 6:12–18; 7:18–22). Workshops producing these items may have operated in northern Israel in this period, perhaps in ʻAkko, from where evidence of glass production activities from this period has come to light (Gorin-Rosen 2012). Remains of glass production activities associated with oil lamps of this type were uncovered at Aḥihud (Porat and Getzov 2010) and may represent a local workshop.

Umayyad and Abbasid Periods

Vessel with Tonged Decoration (Fig. 4:6).— This fragment primarily belongs to a group of open vessels, mainly bowls and beakers, while it could also belong to a very small number of other vessel categories, mainly bottles and jars, the latter of a wide-mouthed type. These vessels were decorated when the glass was still hot and flexible, using a pair of tongs to form impressions on both wall faces. This decorative technique was very common from the Umayyad to the Abbasid period. Finds assigned to this group, ubiquitously found in sites across Israel, display tonged decoration in various patterns (for a comprehensive discussion of the manufacture technique and distribution of this type in Israel, see Gorin-Rosen 2010c:242–245).

The rim in Fig. 4:6 probably belonged to a small bowl. It displays a decoration of concentric ovals, tonged into both wall faces (observed in section). Several bowls decorated in this manner were found in Abbasid–Fatimid-period contexts at Bet She'an (Hadad 2005:37, Pl. 32:631–637; Winter 2011:252–254, Fig. 12.3:1, 2, and see further discussion and references therein). This popular pattern is also seen on a bowl from Ramla (Gorin-Rosen 2010c:243–244, Pl. 10.8:2) and two fragments from Nessana (Harden 1962:80–81, Pl. XX:28, 30).

A few vessels with tonged decoration were found in Western Galilee—several examples from excavations at ʻAkko[3] and two from Aḥihud (Porat and Getzov 2010: Fig. 7:3, 4), as well as in Lower Galilee, e.g., Ẓippori (Gorin-Rosen 2010a: Fig. 16:14), although the material from the latter region displays different profiles and decorative patterns.

Vessel with Applied Patches of Glass (Fig. 4:7).— The small, plain disc-shaped fragment shown here was part of a decoration applied to the wall of a small bottle; it may have also been a small disc-shaped base. Bottles bearing such a decoration have a globular or an ovoid body, a short neck and a small disc base. A body fragment of such a vessel was found at Ramla, where it was dated to the Umayyad period (Gorin-Rosen 2010c:226, Pl. 10.2:17, and see references therein to examples of complete specimens in collections of the Israel Museum and the Islamic Museum in Jerusalem, originating from Jericho, Ḥorbat Liqit in the Negev and as far as the Sassanian Empire). Even though this type is known mainly from unprovenanced complete specimens held in museum collections, it is clear that the group to which it belonged was produced locally during the late Umayyad and the early Abbasid periods, in the eighth century CE.

Vessel with Small Loop Handles (Fig. 4:8).— A small handle of this type was found atop the western treading floor (L135) of the winepress, together with a wineglass and two glass oil lamps (not illustrated) of the late Byzantine–early Umayyad period; nevertheless, this type is believed to have strictly belonged to the Umayyad–Abbasid period, as such handles were found at Bet She'an, in contexts dated to the Umayyad and Abbasid–Fatimid periods (Hadad 2005: Pls. 21:394–396; 44:934, 935; Katsnelson 2014:33*, Fig. 6:8), and Tiberias, where they were dated to the Umayyad period (Hadad 2008:174, Pl. 5.7:116, 117). Various types of vessels of the period in question were adorned with small loop handles, probably used as an oil lamp.

Other Glass Artifacts

Stirring Rods (Fig. 4:9).— This item was found outside the building in Area B, together with a small handle fragment, the lower edge of an oil lamp and a very small raw glass chunk, none of which are illustrated; taken together, these vessels broadly suggest an Early Islamic date. Glass stirring rods are a common find in the Early Islamic period, with a widespread distribution, e.g., Ramla (Gorin-Rosen and Katsnelson 2005:102, 104, Fig. 1:11; Gorin-Rosen 2010c:254, Pl. 10.11:7, 8); Bet She'an, in both Umayyad and Abbasid–Fatimid-period contexts (Hadad 2005:30, 48, Pls. 24:464–467; 49:1007–1010, Winter 2015:223, Fig. 5.5:54, and see further discussion and references therein); and Tiberias (Lester 2004:209–210, Fig. 7.17:190–194; Hadad 2008:175, Pl. 5.8:129–131). A twisted

[3] Unpublished material from excavations at the compound of the Teutonic Order by Boaz and Melloni (2005).

stirring rod was also found in excavations conducted west of Tel ʻAkko, among a group of vessels dated to the Umayyad period (Gorin-Rosen 2012: Fig. 8:7). The stirring rods were apparently locally produced, possibly fulfilling a very specific function which is yet to be determined.

Glass Tesserae (Fig. 4:10).— Seventy glass tesserae of various colors, including 15 of gold-colored glass (Fig. 4:10), were found in as many as 11 of the excavation loci (L102, L103, L105, L109, L110, L112, L113, L115, L120, L135 and L154). This number may be compared with the nearly 500 glass tesserae found in the 2004 excavation at eṭ-Ṭuweiri (Gorin-Rosen 2007; 2015: Figs. 1, 2, and see further discussion therein). The much smaller quantity of glass tesserae from the present excavation is likely due to its greater distance from the church where the tesserae originated, supposedly the building exposed in the 2004 excavation; the much smaller area of the 2004 excavation (50 sq m) compared to that of the 2007 excavation (150 sq m) further emphasizes the high concentration of glass tesserae. While the excavation of the winepress in Area A yielded glass tesserae, window fragments (see below) and an inscription (see Syon, Getzov and Daniel, this volume: Inscription 3), which appear to have originated in a church, the quantity of such finds exposed in direct association with the church structure was appreciably greater.

Glass Windowpanes

Three fragments of glass windowpanes, found in L115 and L117, probably originated in the same building as the glass tesserae, where other such finds were retrieved in the 2004 excavation (Gorin-Rosen 2007: Fig. 19).

GLASS PRODUCTION REMAINS

Six finds relating to glass production debris were found in different loci, including two raw glass chunks—one found on the surface (L100) and another in one of the filtering vats of the winepress (L142); three deformed fragments (L102, L125, L154); and two pieces of production waste (L120). These remains, together with 20 other glass-production remains found in the 2004 excavation (Gorin-Rosen 2007), suggest that glass production activities took place at the site; the greater quantity of such finds in the 2004 excavation indicates that the putative area of glass working may have been nearer to that part of the site than to the 2007 excavation area. It is noteworthy that some heat-deformed glass finds from the 2004 excavation area may have been the result of a conflagration that destroyed the church rather than part of a glass production (see Smithline 2007).

The existence of small areas of industrial activity in association with rural sites of the Late Roman and Byzantine periods was documented at other sites, for example Jalame (Weinberg 1988), where a glass workshop was uncovered close to installations for oil and wine production. At eṭ-Ṭuweiri, the glass production debris may have originated in a small glass workshop, or perhaps one glass furnace that operated during the construction of the

church and served to supply its builders with windows, oil lamps and other glass vessels and objects.

Summary and Discussion

The extensive area excavated in 2007 at eṭ-Ṭuweiri yielded a large assemblage of glass fragments, including some glass tesserae that may have originated in the church exposed in 2004, and remains of glass production—a raw glass chunk, a few deformed vessels and a small fragment of furnace debris—suggesting a small-scale local production.

The glass from the 2007 excavation was mostly found in connection with the winepress in Area A, including finds uncovered in accumulations atop the treading floors and in the collecting vats, while scattered finds were retrieved from other parts of the excavation. The lion's share of the finds from the winepress was associated with the eastern treading floor (L109), including a bowl (Fig. 1:1), wineglasses (Fig. 1:4–8), a bottle (Fig. 2:1) and oil lamps (Fig. 4:1, 2, 5). These finds were shown to date mostly from the Byzantine–early Umayyad period, apart from an eight-century decorated glass vessel (Fig. 4:7). Vessels unearthed in connection with the western collecting vat (L110 and L125) included wineglasses (Fig. 1:2, 3), bottles (Fig. 2:2, 4), an oil lamp (Fig. 4:4) and an eighth-century bowl with a tonged decoration (Fig. 4:6), the latest glass find in this context. A small handle of an Umayyad-period oil lamp (Fig. 4:8) was found in the adjacent western treading floor (L135). Glass finds uncovered in accumulations near the winepress (L112, L114, L153) include bottles (Figs. 2:3–5; 3:1–3), an oil lamp (Fig. 4:3) and a gold-colored tessera (Fig. 4:10). Only two fragments were found in association with the structure in Area B: a bottle from atop the stone pavement (L120; Fig. 2:6) and an Umayyad-period stirring rod found east of the structure (L146; Fig. 4:9).

Some of the glass vessels described here, including the wineglasses (Fig. 1:4–8), oil lamps (Fig. 4:1, 2, 5), bottles (e.g., Fig. 2:1), window fragments and tesserae, apparently belong to the Christian occupation of the site, from the Byzantine to the Early Islamic period, while others, especially the tonged bowl (Fig. 4:6), the vessel decorated with applied glass patches (Fig. 4:7), the small loop handle (Fig. 4:8) and the stirring rod (Fig. 4:9), demonstrate the increasing infiltration of Early Islamic glass-making traditions of the eighth century.

For the sake of comparison, it is important to reiterate here the description of the glass repertoire of the 2004 excavation. That assemblage is noteworthy for the preponderance of glass tesserae, far exceeding the quantity of all other glass objects found in 2004, strongly suggesting the association of that assemblage with the church unearthed at that time. The glass vessels found in 2004 (Gorin-Rosen 2007: Figs. 15–24) comprised: bowls with hollow, out-folded rims; beakers and wineglasses with rounded rims, hollow ring bases and stems; bottles with a neck decorated with wound wavy trails; rims of various bottle types and fragments of bases; bowl-shaped oil lamps with hollow, out-folded rims and three handles and oil lamps with hollow, conical stems. Also found were windowpanes (Gorin-

Rosen 2007: Fig. 19) and fragments of debris from glass production, amounting to as many as 20 pieces (Gorin-Rosen 2007: Figs. 23, 24), including mainly melted waste from the furnace, deformed vessels and windowpanes, and one raw glass chunk. The heat-deformed finds were probably the result of the conflagration that destroyed the church (see Smithline 2007). The two glass assemblages from eṭ-Ṭuweiri reveal some similarities in the vessel types, although they also differ in one important respect, the presence of Umayyad-period finds in the present excavation. Smithline (2007) concluded that the church exposed in his excavation was abandoned at the end of the Byzantine period, based on the absence of finds dating later than the mid-seventh century CE. Accordingly, he suggested that the church was destroyed at that time, possibly during the Persian invasion of 614 CE, or in the later Muslim conquest in the mid-seventh century CE. Nevertheless, Smithline (2007) noted the continuity in occupation of a number of nearby settlements between the Byzantine and the Umayyad periods, e.g., Khirbat esh-Shubeika, Shelomi, Khirbat el-Ghureiyib and Ḥorbat Bata. The glass finds from the 2007 excavation are in agreement with the chronology put forward by Syon, Getzov and Daniel (this volume), demonstrating a continuity of occupation between the Byzantine and Early Islamic periods at eṭ-Ṭuweiri, despite the apparent destruction of the church.

REFERENCES

Barag D. 1967. The Glass. In M.W. Prausnitz. *Excavations at Shavei Zion: The Early Christian Church* (Monografie di archeologia et d'arte II). Rome. Pp. 65–70.

Barag D. 1970. *Glass Vessels of the Roman and Byzantine Periods in Palestine*. Ph.D. diss. The Hebrew University. Jerusalem (Hebrew; English summary, pp. I–VIII).

Barag D. 1983. Glass Vessels. In V. Tzaferis. *The Excavations of Kursi-Gergesa* (*'Atiqot* [*ES*] 16). Jerusalem. Pp. 37–38, 62–63.

Boaz A. and Melloni G.P. 2005. 'Akko (East). *HA–ESI* 117 (September 26). http://www.hadashot-esi.org.il/report_detail_eng.aspx?id=237&mag_id=110 (accessed April 1, 2020).

Carboni S. 2001. *Glass from Islamic Lands: The al-Sabah Collection, Kuwait National Museum.* New York.

Cohen E. 1997. Roman, Byzantine and Umayyad Glass. In Y. Hirschfeld. *The Roman Baths of Hammat Gader: Final Report*. Jerusalem. Pp. 396–431.

Delougaz P. and Haines R.C. 1960. *A Byzantine Church at Khirbat al-Karak* (OIP LXXXV). Chicago.

Foy D. 2000. Un atelier de verrier à Beyrouth au début de la conquête islamique. *Syria* 77:239–290.

Gorin-Rosen Y. 2002. Excavations at Khirbat el-Shubeika, 1991, 1993: The Glass Vessels. In Z. Gal ed. *Eretz Zafon: Studies in Galilean Archaeology*. Jerusalem. Pp. 288–322 (Hebrew; English summary, pp. 186*–187*).

Gorin-Rosen Y. 2005. The Glass. In B. Arubas and H. Goldfus eds. *Excavations on the Site of the Jerusalem International Convention Center (Binyanei Ha'uma): A Settlement of the Late First to Second Temple Period, the Tenth Legion's Kilnworks, and a Byzantine Monastic Complex; The Pottery and Other Small Finds* (*JRA* Suppl. S. 60). Portsmouth, R.I. Pp. 195–210.

Gorin-Rosen Y. 2006. The Glass Finds from Khirbat el-Baṭiya (Triangulation Spot 819). *'Atiqot* 53:29*–36* (Hebrew; English summary, pp. 198–199).

Gorin-Rosen Y. 2007. The Glass Finds. In H. Smithline. Eṭ-Ṭuweiri. *HA–ESI* 119 (April 26). http://www.hadashot-esi.org.il/Report_Detail_Eng.aspx?id=515&mag_id=112 (accessed April 1, 2020).

Gorin-Rosen Y. 2009. The Glass Vessels from Strata 9–6. In N. Getzov, D. Avshalom-Gorni, Y. Gorin-Rosen, E.J. Stern, D. Syon and A. Tatcher. *Ḥorbat 'Uẓa; The 1991 Excavations* II: *The Late Periods* (IAA Reports 42). Jerusalem. Pp. 78–98.

Gorin-Rosen Y. 2010a. Glass. In Y. Tepper. Ẓippori. *HA–ESI* 122 (October 4). http://www.hadashot-esi.org.il/Report_Detail_Eng.aspx?id=1516&mag_id=117 (accessed April 2, 2020).

Gorin-Rosen Y. 2010b. Glass from the Late Byzantine Remains near Shiqmona. *'Atiqot* 63:209–218.

Gorin-Rosen Y. 2010c. The Islamic Glass Vessels. In O. Gutfeld. *Ramla: Final Report on the Excavations North of the White Mosque* (Qedem 51). Jerusalem. Pp. 213–264.

Gorin-Rosen Y. 2012. Glass. In N. Feig. 'Akko, Ha-Ḥaroshet Street. *HA–ESI* 124 (December 31). http://www.hadashot-esi.org.il/report_detail_eng.aspx?id=2186&mag_id=119 (accessed September 22, 2021).

Gorin-Rosen Y. 2013. The Glass Assemblage from Cave 1071. In E.C.M van den Brink, O. Rutgaizer, Y. Gorin-Rosen, L.K. Horwitz, N. Liphschitz and H.K. Mienis. Two Roman–Byzantine Subsurface Features at Ḥorbat Qasṭra (Castra), at the Foot of Mount Carmel. *'Atiqot* 75:98−109.

Gorin-Rosen Y. 2015. Byzantine Gold Glass from Excavations in the Holy Land. *JGS* 57:97−119.

Gorin-Rosen Y. 2016. An Umayyad Glass Assemblage from Ramla. *'Atiqot* 86: 41−57.

Gorin-Rosen Y. and Katsnelson N. 2005. Glass Finds from the Salvage Excavation at Ramla. *'Atiqot* 49:101–114.

Hadad S. 2005. *Islamic Glass Vessels from the Hebrew University Excavations at Bet Shean* (Qedem Reports 8). Jerusalem.

Hadad S. 2008. Glass Vessels. In Y. Hirschfeld and O. Gutfeld. *Tiberias: Excavations in the House of the Bronzes; Final Report* I: *Architecture, Stratigraphy and Small Finds* (Qedem 48). Jerusalem. Pp. 167–189.

Harden D.B. 1962. Glass. In H.D. Colt ed. *Excavations at Nessana (Auja Hafir, Palestine)* 1. London. Pp. 76–91.

Israeli Y. 2008. The Glass Vessels. In J. Patrich. *Archaeological Excavations at Caesarea Maritima, Areas CC, KK and NN; Final Reports* I: *The Objects*. Jerusalem. Pp. 367–418.

Katsnelson N. 2014. The Glass Finds from Bet She'an (Youth Hostel). *'Atiqot* 77:23*–57*.

Katsnelson N. 2016. The Courthouse Site: The Glass from Areas TB and TC. In. M. Hartal, D. Syon, E. Stern and A. Tatcher. *Akko* II: *The 1991–1998 Excavations; The Early Periods* (IAA Reports 60). Jerusalem. Pp. 65–89.

Lester A. 2004. The Glass. In. D. Stacey. *Excavations at Tiberias, 1973–1974; The Early Islamic Periods* (IAA Reports 21). Jerusalem. Pp. 167–220.

Peleg M. 1994. Bet She'an: A Paved Street and Adjacent Remains. *'Atiqot* 25:139–155.

Pollak R. 2003. Early Islamic Glass from Caesarea: A Chronological and Typological Study. In *Annales du 15e Congrès de l'AIHV (New York–Corning 2001).* Nottingham. Pp. 165–170.

Porat L. and Getzov N. 2010. Aḥihud. *HA–ESI* 122 (July 2). http://www.hadashot-esi.org.il/Report_Detail_Eng.aspx?id=1414&mag_id=117 (accessed April 1, 2020).

Smithline H. 2007. Eṭ-Ṭuweiri. *HA–ESI* 119 (April 26). http://www.hadashot-esi.org.il/Report_Detail_Eng.aspx?id=515&mag_id=112 (accessed April 1, 2020).

Syon D., Getzov N. and Daniel Z. This volume. Excavations at eṭ-Ṭuweiri and the Boundary Between the Dioceses of Tyre and ʿAkko-Ptolemais in the Byzantine Period.

Weinberg S.S. 1988. The Buildings and Installations. In G.D. Weinberg ed. *Excavations at Jalame: Site of a Glass Factory in Late Roman Palestine.* Columbia, Mo. Pp. 5–23.

Winter T. 2011. The Glass Finds. In R. Bar-Nathan and W. Atrash. *Bet She'an* II: *Baysān; The Theater Pottery Workshop* (IAA Reports 48). Jerusalem. Pp. 345–362.

Winter T. 2015. The Glass Finds. In G. Mazor and W. Atrash. *Bet She'an* III/1: *Nysa-Scythopolis; The Southern and Severan Theaters. The Stratigraphy and Finds* (IAA Reports 58/1). Jerusalem. Pp. 207–227.