'Atiqot 61, 2009

Results of a Salvage Excavation at Tel Kabri

Dina Shalem

Tel Kabri, extending over 300 dunams, is located in the western Upper Galilee, on the eastern fringe of the coastal plain. Four large springs are in proximity to the site, one of them in the tell's center (Frankel et al. 2001). Between 1986 and 1993 eight seasons of excavation were conducted at the site on behalf of Tel Aviv University, directed by A. Kempinski and W.D. Niemeier. The excavations revealed oval and rectangular Early Bronze Age buildings, a Middle Bronze Age II palace, rampart, domestic remains and tombs, and Iron Age II remains (Kempinski 2002).

The excavation described below was conducted at the tell in 1999, prior to erecting five electric poles along the Mandatory road that transverses it from east to west.[1] Five squares were opened (A–E; Fig. 1). A massive wall, most probably part of the MB II fortification system, was revealed in Sq A; earlier floors and walls, dating to the Early Bronze Age and MB II, were exposed in Sqs A, B, and C. The two westernmost squares (D, E) yielded no archaeological finds; in Sq D, an alluvium layer was uncovered, probably the continuation of a similar layer found in Sq C. In Sq E, the bedding of the Mandatory road reached a depth of 2.5 m.

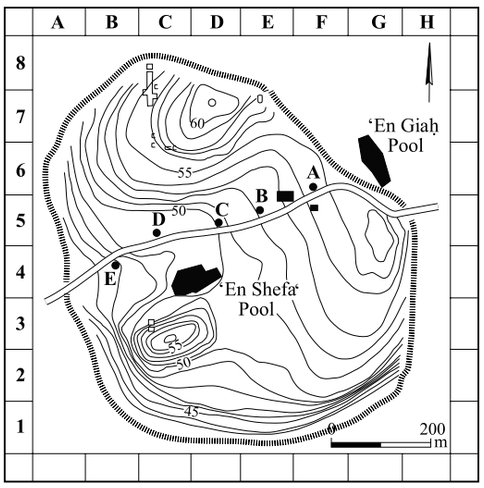

Fig. 1. Tel Kabri, the location of Sqs A–E.

The Excavation[2]

Square A (Plan 1; Fig. 2)

A massive wall (W102) built of fieldstones varying in size, 2.0–2.5 m high and at least 4.5 m wide, was discovered in the eastern part of the square. Only its western, inner face, which sloped inward 0.5 m at the base, and its top, were revealed. Remains of brick material were found on top of the wall.

Modern material and boulders disturbed the western part of the square (L101). Therefore, the excavation continued in the eastern part only, down to the base of the wall. A possible plaster floor (L112) was found in a very small excavated area below the base of the wall. A small amount of body sherds was unearthed, most probably dating to the Early Chalcolithic period.[3] A layer of fieldstones, which seems to have been deliberately arranged, was found above the floor (L111; 0.25–0.35 m thick). Upon the stone layer in the north (L110) a layer of brown soil was distinguished, including sherds from both the Early Chalcolithic period and the Middle Bronze Age. In the southern part of the square (L109; Plan 1: Section 2–2), a packed layer of small stones was exposed, containing exclusively Early Chalcolithic sherds (see Fig. 7).

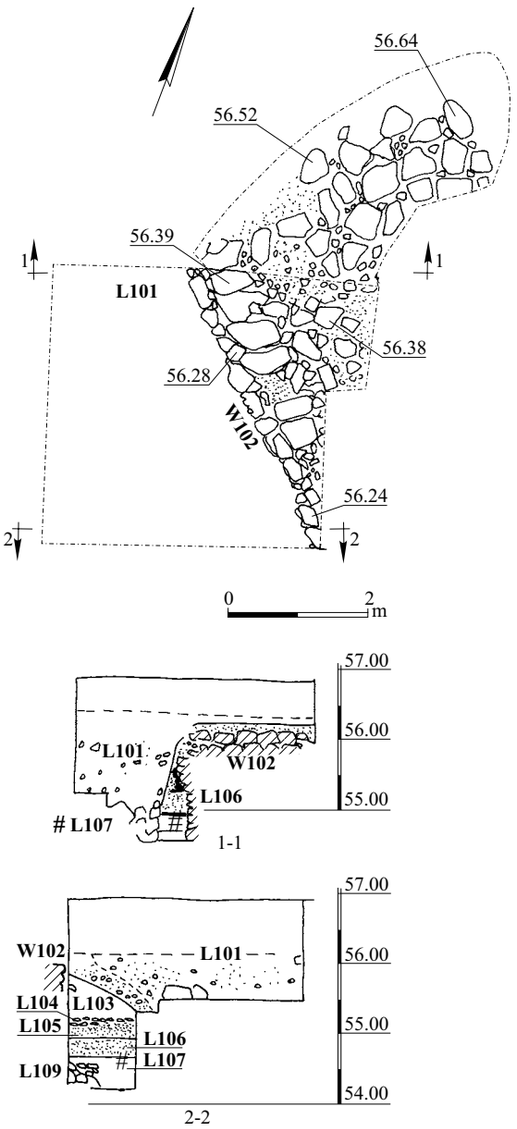

Plan 1. Square A, plan and sections.

A layer of very dark brown soil (L108), yielding both Early Chalcolithic and Middle Bronze Age sherds, covered both L109 and L110. A 0.4 m thick layer of crushed chalk (L107), containing a small amount of Early Chalcolithic, but mainly MB II sherds (see Fig. 10:1–8), was deposited over L108. On top of the chalk layer was a layer of dark brown soil (L106), which included MB II sherds. Locus 106 was superposed by another brown soil layer in its southern part (L105) and by a layer of light soil (L103) in its northern part. Locus 105 was covered by a layer of hard-packed sherds laid horizontally (see Fig. 11:1–8), small stones, and pebbles (L104).The soil in L103 contained bits of chalk and sherds (see Fig. 11:9–14; the sherds derive from the level parallel to and above L104). Locus 103 continued above L104. A layer of earth containing modern material was exposed between L104 and the bottom of the surface layer, level with the top of W102. This layer of earth is most probably part of a large modern pit that disturbed the western part of the square.

Square B (Plans 2–6; Fig. 3)
Part of a pit (L204) that cut into earlier strata was observed along the western balk of the square. At least five levels of floors, or fragments thereof, and walls, were found in the remaining portion of the square.

Level I (Plan 2).— A wall or bench (W214), built of a row of fieldstones varying in size, was found in the eastern part of the square. Built against W214 was a square installation (L216; 0.8 × 0.8 m), which had three walls (0.15–0.20 m thick, 0.3 m high) made of mud, and a plaster floor that abutted it on the north and west. The remaining area west of W214 was covered by a floor (L218) made of a thick layer of horizontally laid sherds, mainly body sherds and *ṭabun* fragments (see Fig. 12:1–6). On the floor were sherds, a few bones, flint, and three pestles (see Fig. 12:7, 8). A second layer of sherds and *ṭabun* fragments (L219) was distinguished on the southeastern part of Floor 218. The floor may have been repaired, or was perhaps once entirely covered by L219. In any case, the floor did not extend beyond the eastern edge of W214 and reached L216 in the north. East of W214 part of another floor was exposed (L217). Although uncovered only in proximity to the southern edge of the wall, Floor 217, made of a packed, very hard thin

Fig. 2. The wall in Sq A.

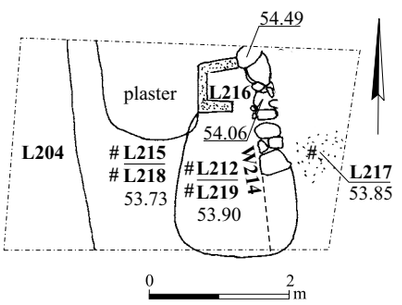

Plan 2. Square B, Level I.

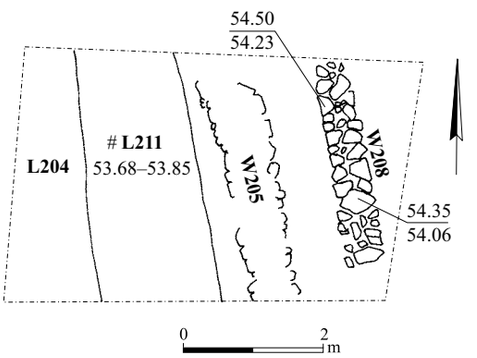

Plan 3. Square B, Level II.

layer of gravel, may have once covered the entire area east of W214. Level I was covered by earth (L212, L215) containing MB II sherds, a stopper, and loom weights, as well as bones and flint (see Fig. 12:9–20). These finds most probably originated from Floors 218 and 219.

Level II (Plan 3; Fig. 3).— Discovered above L215 was a floor (L211), made of two to three layers of sherds (see Fig. 13), whose northern part was much thicker than its southern one. On top of this floor was a layer of very small stones and sherds, bones, and flint. Floor 211 seems to have been cut by W205 (see Level III, below). The floor may have originally been associated with a wall further east (W208), although the levels of the floor and wall do not entirely correspond. Wall 208 was built of two

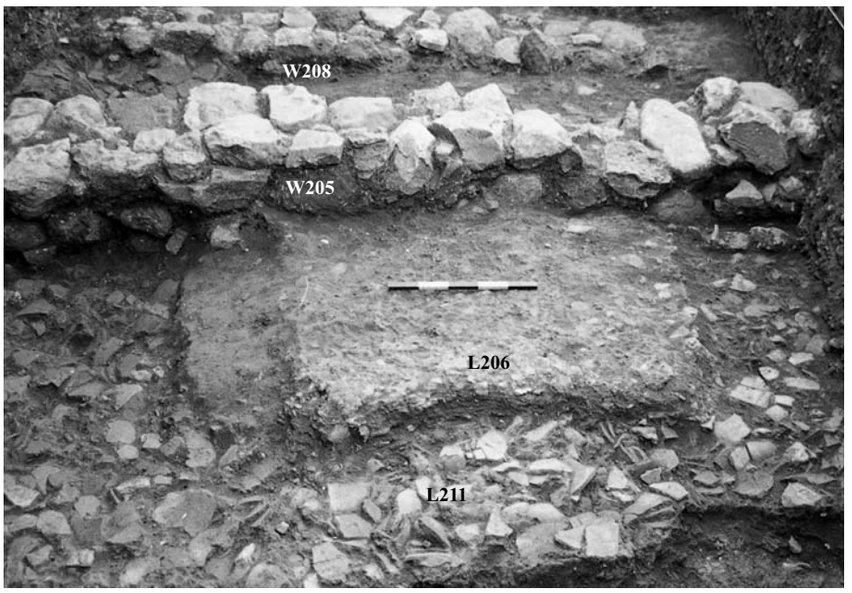

Fig. 3. Square B, Levels II and III, looking east.

rows of fieldstones. The area to its east was not excavated, but when the southern part of the wall was dismantled, thin layers of dark soil and ash, which may have been living surfaces, were distinguished.

Level III (Plan 4; Fig. 3).— Wall 205, which consists of two rows of fieldstones interspersed with small stones, was constructed west of and parallel to W208 of Level II, and probably severed Floor 211, as mentioned above. A layer of sherds (L210; see Fig. 14:1–4) was found between and upon Walls 208 and 205. Another floor, consisting of one layer of sherds (L207; see Fig. 14:6–9), was exposed on top of the northern part of W208 and westward, abutting W205. Wall 205 was abutted from the west by a floor (L206) made of a hard-packed layer of small stones and small sherds (see Fig. 14:10–18).

Level IV (Plan 5).— A floor (L201; see Fig. 15) was exposed on top of the northern part and on both sides of W205. The floor layer was thick, and composed primarily of two to three layers of horizontally laid sherds, often body sherds.

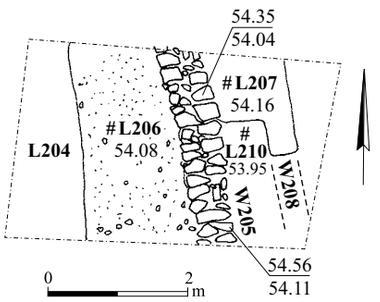

Plan 4. Square B, Level III.

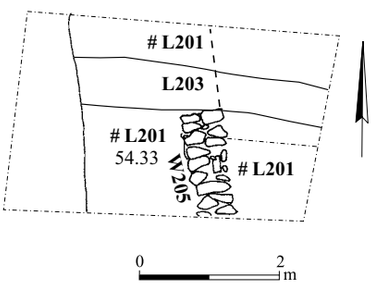

Plan 5. Square B, Level IV.

Another layer of sherds was found in the northern part of the square. A lump of crushed chalk mixed with earth and a few sherds (L203)

was uncovered on the floor, about 1 m south of and parallel to the northern balk of the square.

Level V (Plan 6).— A wall (W202), built of one row of large fieldstones, was encountered close to the northern balk of the square. In the northern balk a thin layer of dark soil was distinguished. The wall was partly built upon this layer, from which the pit (L204) seems to have been dug. It is therefore difficult to determine whether Pit 204 belonged to this level or to a later one. The pit contained soft earth, many MB II and Iron II sherds, and the upper part of a figurine (Fig. 17).

Square C (Plans 7, 8; Figs. 4–6)
A thick layer, at least 1 m deep, containing very small, densely packed stones and light brown soil, was reached 2 m below the surface. The same layer was encountered in Sq D and may have accumulated in proximity to the spring. As it yielded Early Chalcolithic sherds (Fig. 8:1–7), this layer probably predates the Early Bronze Age. Two levels (I, II) were exposed above it.

Level I (Plan 7; Figs. 4, 5).— Two walls (W304, W310) were uncovered in Level I. Wall 304 consisted of one row of fieldstones, well aligned along its eastern face. Wall 310, also of one row of stones, ran parallel to W304. Between the walls was a fill of fieldstones. On its western side, W310 seems to have retained a fill of very small stones and Early Bronze Age sherds (L305; see Fig. 8:10, 12, 16, 17, 21). An earthen floor (L312) abutted W304 from the east. Two flat stones, one of them surrounded by small stones, were exposed on the floor. When Walls 304 and 310 were dismantled, Early Bronze

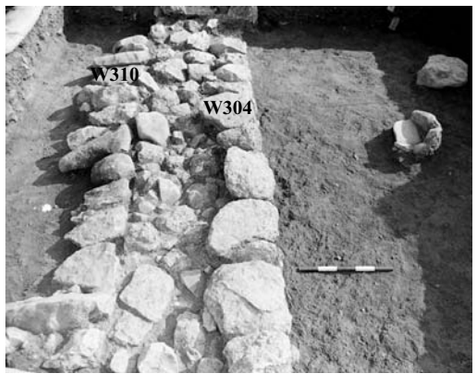

Fig. 4. Square C, Level I, looking north.

Fig. 5. Square C, Level I: cross-section of W304 and W310, looking south.

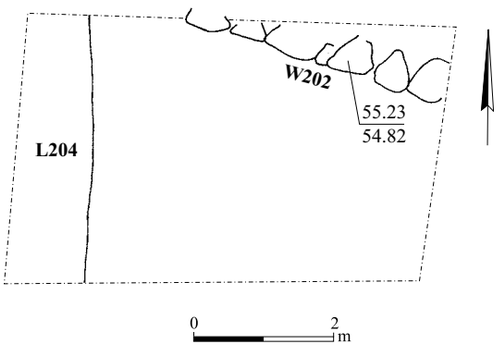

Plan 6. Square B, Level V.

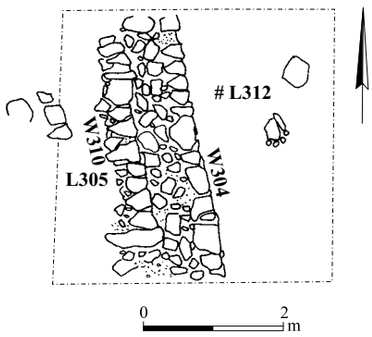

Plan 7. Square C, Level I.

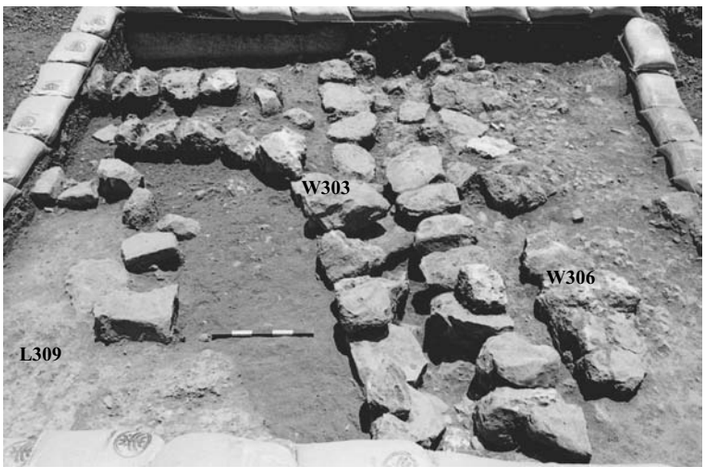

Fig. 6. Square C, Level II, looking south.

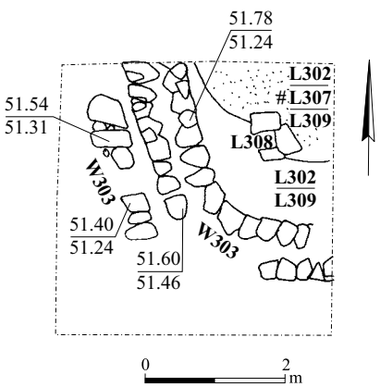

Plan 8. Square C, Level II.

Age sherds (see Fig. 9:8, 9, 11, 13–15, 18–20, 22, 23) were found in between their stones and on the floor (L312).

Level II (Plan 8; Fig. 6).— A curved wall (W303), one to two courses high, was exposed directly above W304 of Level I. It was built of two rows of fieldstones; the core fill was missing. Distinguished inside the building was a floor (L309) made of hard-packed soil and small stones in various sizes. Another floor (L307), composed of hard-packed small stones and sherds, and patches of limestone, was found above this floor. Although the floor did not abut the wall, it appears to belong to this building. An accumulation on the floor (L302) consisted of many small stones, partially hard-packed soil, patches of sherds, and other material, perhaps organic. A small installation (L308) constructed of three stones was found on the floor, and a fragment of another wall (W306) was exposed parallel to W303, above W310 of Level I and perhaps on top of L305. The three floors distinguished in this level contained sherds dating to EB I (see Fig. 9), although a few belong to EB II; these later sherds are most likely intrusive, given the proximity of the locus to surface level.

THE FINDS

The pottery finds are presented according to locus, and discussed chronologically. Most of the pottery can be compared with well known vessel-types from previous excavations at Kabri.

The Early Chalcolithic Period (Figs. 7; 8:1–7) Early Chalcolithic pottery was found below W102 in Sq A (Fig. 8), and in the accumulation below the architectural remains of Sq C (Fig. 8:1–7), as well as in Level I of Sq C (Fig. 8:8–23), which was dated EB I.

Bowls.— V-shaped bowls (Fig. 8:1, 10) are common throughout the Chalcolithic period. Figure 8:2 is an early V-shaped bowl with a dark slip and string marks. It has parallels at Ḥ. ʻUẓa Stratum 17 (Getzov, forthcoming) and Kabri Level 12 (where it is defined as Late Neolithic; Scheftelowitz 2002b: Fig. 5.2:1–3). Figure 8:3 has a flaring rim and a dark slip; parallels are found at Ḥ. ʻUẓa, Strata 17 and 19 (Getzov, forthcoming). Figures 8:4 and 8:5 have flat, thickened rims and either rope decoration or small handles below the rim. Similar bowls are found at Ḥ. ʻUẓa Stratum 17 and Kabri Level 12 (Getzov forthcoming; Scheftelowitz 2002b: Fig. 5.2:7). The simple, rounded bowls (Fig. 8:8, 9) could just as well be Early Chalcolithic (Scheftelowitz 2002b: Fig. 5.1:2). The carinated bowls in Fig. 8:11, 12 are found in Level 12 at Kabri (Scheftelowitz 2002b: Fig. 5.1:3).

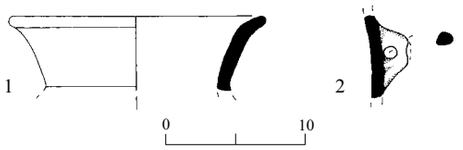

Fig. 7. Square A: Early Chalcolithic pottery.

No.	Object	Basket	Locus	Description
1	Jar	1043	109	Light brown clay, many grits
2	Handle	1043	109	Light brown clay, many large white grits

Fig. 8 ▸

No.	Object	Basket	Locus*	Description
1	Bowl	3050/3	317	Light red-brown clay, brown core, large white grits
2	Bowl	3049/2	317	Brown clay, many large white grits, brown slip on ext. and int.
3	Bowl	3048	317	Light brown clay, many large grits, red and black slip on int.
4	Bowl	3047	317	Light red-brown clay, thick gray core, grits
5	Bowl	3049/1	317	Light brown, brown core, large white grits
6	Jar	3050/2	317	Light brown, white grits, red slip on ext. and int. of rim
7	Holemouth jar	3050/1	317	Exterior reddish clay, int. gray clay, many large white grits
8	Bowl	3040/2	304	Brown clay, grits, red slip on ext.
9	Bowl	3039/2	304	Brown clay, grits
10	Bowl	3015/3	305	Light brown-yellowish clay, large white grits, remains of red slip on int.
11	Bowl	3039/1	304	Red clay, brown core, grits
12	Bowl	3045	305	Gray clay, few grits
13	Holemouth jar	3035	304	Brown-yellowish clay, small grits
14	Holemouth jar	3022	304	Light brown clay, thick dark gray core, grits, red slip on int.
15	Holemouth jar	3040/1	304	Light brown-reddish clay, few grits
16	Holemouth jar	3015/1	305	Light brown clay, white grits
17	Jar	3015/2	305	Light brown-reddish clay, light gray core, large grits, red-brown slip on int. of rim
18	Jar	3043	310	Light brown clay
19	Jar	3040/3	304	Brown clay, large gray core, white grits, red slip on ext. and on rim
20	Jar	3022	312	Brown clay, large gray core, calcite grits, red slip on ext.
21	Chalice	3015/2	305	Brown-yellowish clay, grits, red slip on ext. and int.
22	Handle	3026	312	Light brown clay, gray core, some grits, brown slip on ext.
23	Handle	3040/4	304	Brown clay, thin gray core, some grits, red slip on ext.

* L317 is not marked on plan

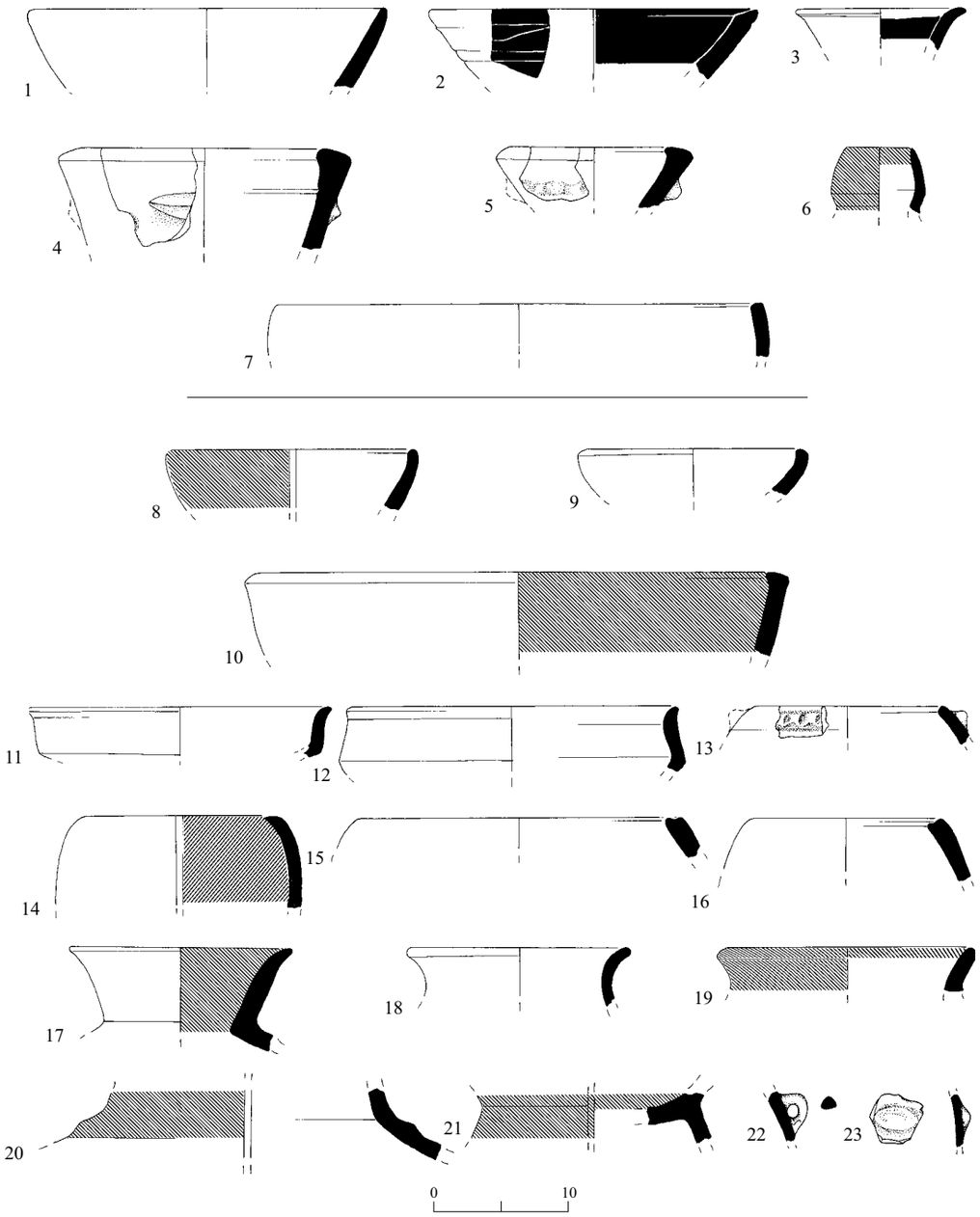

Fig. 8. Square C: Early Chalcolithic pottery from the accumulation layer (1–7) and from Level I (8–23).

Jars.— Jars with bow rims (Fig. 8:6) are very common in the Early Chalcolithic period and are known from Ḥ. ʻUẓa Strata 17 and 19 (Getzov, forthcoming) and Kabri Level 12 (Scheftelowitz 2002b: Fig. 5.1:7, 8). Holemouth jars are also frequent at both Chalcolithic and Early Bronze Age sites. The holemouth jar in Fig. 8:13 has rope decoration below the rim,

and occurs in Early Chalcolithic contexts, such as Ḥ. ʻUẓa Stratum 17 (Getzov, forthcoming). The holemouth jar in Fig. 8:14 is unusual and has an Early Bronze Age parallel at Kabri Level 9 (Scheftelowitz 2002: Fig. 5.5:6, 8), but may, perhaps, be Early Chalcolithic (Garfinkel 1999: Fig. 83:6). The same is true for the holemouth jars with a grooved rim (Fig. 8:15, 16), which were dated at Kabri to EB I (Level 9; Scheftelowitz 2002: Fig. 5.5:7), but are found in earlier contexts, such as Ḥ. ʻUẓa Stratum 19 (Getzov, forthcoming; see also Garfinkel 1999:82:7). The holemouth jar in Fig. 8:7, which is particularly open, also has parallels at Ḥ. ʻUẓa Strata 17 and 19 (Getzov, forthcoming). The jars in Figs. 7:1 and 8:17 have high, flaring rims characteristic of the Early Chalcolithic period (Garfinkel 1999: Fig. 85:6, 7; Ḥ. ʻUẓa Stratum 17: Getzov, forthcoming). Figures 8:18 and 8:19 have simple flaring rims, with parallels at Ḥ. ʻUẓa Stratum 17 (Getzov, forthcoming). Chalices, such as Fig. 8:20, which is dark-slipped, are often found in Early Chalcolithic contexts (Ḥ. ʻUẓa Stratum 17: Getzov, forthcoming). The small pierced handles (Figs. 7:2; 8:21) and ledge handle (Fig. 8:22) occur throughout the Chalcolithic period.

The Early Bronze Age I (Fig. 9)
Early Bronze Age sherds date the architectural remains found in Sq C.

Bowl.— The open rounded bowl in Fig. 9:1 differs from those in Fig. 8:8, 9 in its clay, which contains calcite grits. These grits are usually found in clay from the Early Bronze Age, as at Be'er Ẓonam (Shalem 2006), and not earlier. Open rounded bowls are known from EB I sites, such as Qiryat Ata (Golani 2003: Fig. 4.1:12, 13).

Jars.— The clay of Fig. 9:2 also has calcite grits, differentiating it from the clay of the Chalcolithic jars. The ridge of Fig. 8:20 belongs to a jar of a type found in the EB I level at Be'er Ẓonam (Shalem 2006). This jar is produced of easily recognizable clay containing calcite grits and has a reddish slip typical of the jar type.

Holemouth Jars.— The three holemouth jars in Fig. 9:3–5 should be assigned to an EB I horizon based on the clay, presence of calcite grits, and slip. Holemouth jars are found at Qiryat Ata (Golani 2003: Figs. 4.5–4.7).

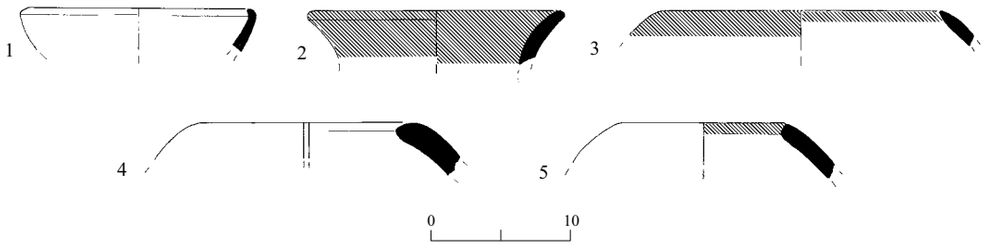

Fig. 9. Square C, Level II: EB I pottery.

No.	Vessel	Basket	Locus	Description
1	Bowl	3003	302	Reddish surface, light brown clay, calcite grits
2	Jar	3016	309	Light brown clay, thick dark core, calcite grits, red slip on ext. and int.
3	Holemouth jar	3014/3	307	Light reddish fine clay, light brown core, red slip on ext. and int. of rim
4	Holemouth jar	3014/1	307	Brown-yellowish clay, gray core, grits, light brown slip on ext.
5	Holemouth jar	3014/2	307	Light brown clay, thick gray core, calcite grits, red slip on int. of rim

The Middle Bronze Age II (Figs. 10–15)
Pottery dating to MB II was found in Sq A and in the levels of the domestic remains in Sq B.

Open Bowls.— Open bowls with simple rims, usually slightly in-turned, are found in many of the loci (Figs. 10:1; 11:9; 12:9; 13:1; 14:1, 10; 15:2–4). Such vessels were uncovered at Kabri, where they were dated MB IIA (Kempinski, Gershuny and Scheftelowitz 2002: Figs. 5.21:3; 5.63:2). Figures 10:3, 12:2, 13:2, 14:11 and 15:1 are larger and have flat, thickened rims,

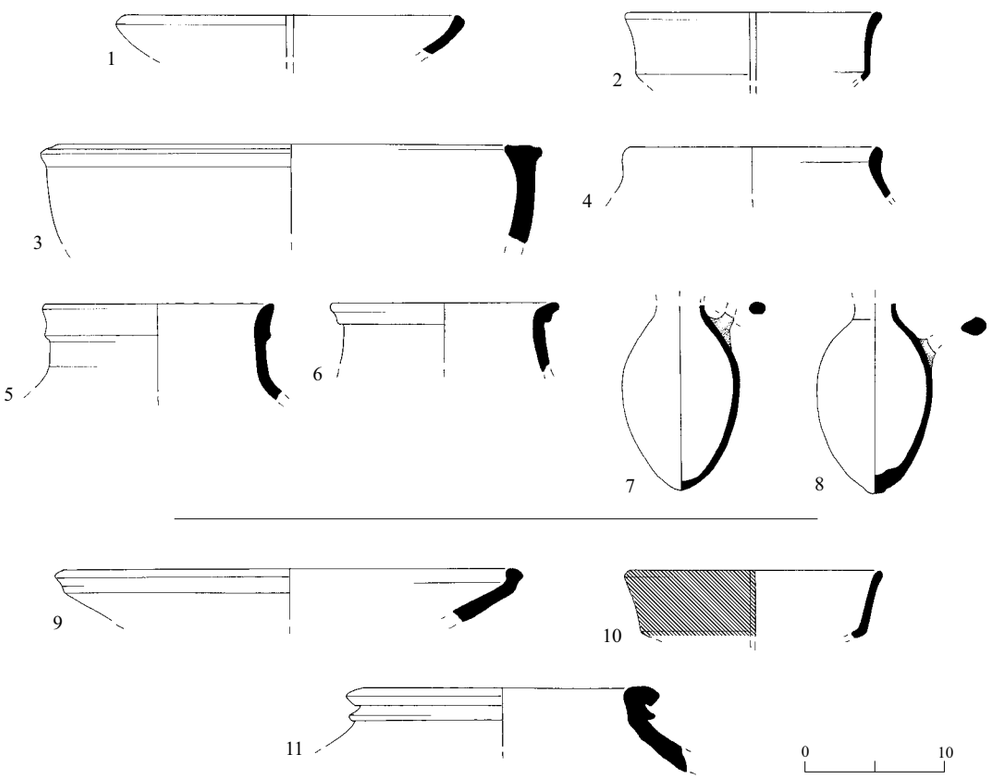

Fig. 10. Square A: MB II pottery from L107 (1–8) and L106 (9–11).

No.	Vessel	Basket	Locus	Description
1	Bowl	1030/2	107	Red clay, brown-gray core, grits
2	Bowl	1035/1	107	Red clay, very small grits
3	Bowl	1034	107	Brown-red clay, brown core, grits
4	Jar	1032/2	107	Brown-yellowish fine clay, grits
5	Jar	1019	107	Brown-orange clay, gray core, some grits
6	Jar	1035/2	107	Red clay, large white grits
7	Juglet	1032	107	Red clay, grits
8	Juglet	1033	107	Red clay, grits
9	Bowl	1028/1	106	Red-brown clay, gray core
10	Bowl	1028/3	106	Light brown clay, very small grits, red slip and burnish
11	Jar	1028/2	106	Red-brown clay, gray core, grits

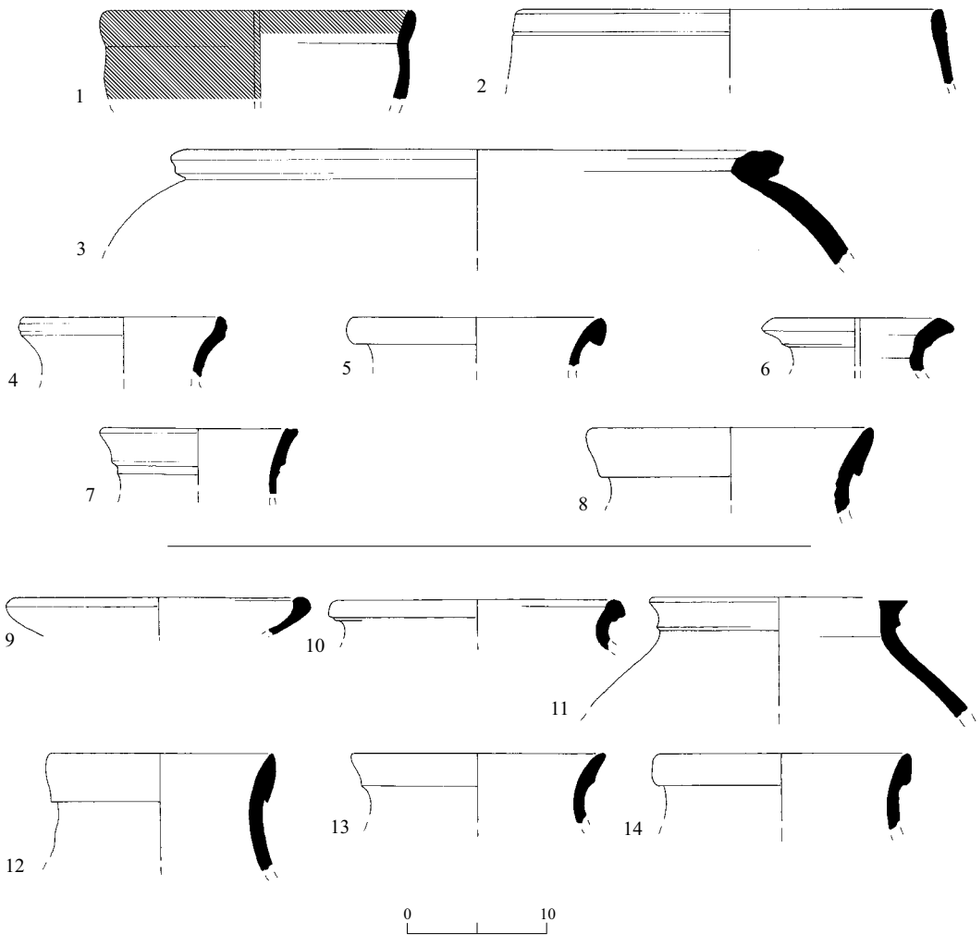

Fig. 11. Square A: MB II pottery from L104 (1–8) and L103 (9–14).

No.	Vessel	Basket	Locus	Description
1	Bowl	1021/3	104	Buff fine clay, red slip and burnish
2	Bowl	1016/2	104	Brown-yellowish clay, grits
3	Krater	1018/1	104	Brown-red clay, brown-gray core, grits
4	Jar	1016/1	104	Red clay, grits
5	Jar	1021/2	104	Brown clay, grits
6	Jar	1021/4	104	Light brown clay, dark gray core, grits
7	Jar	1018/2	104	Brown gray core, grits
8	Jar	1021/2	104	Red clay, large brown-gray core, very small grits
9	Bowl	1015	103	Brown-orange clay, gray core, grits
10	Cooking pot	1026/2	103	Red clay, small grits
11	Jar	1011	103	Brown-orange clay, brown-gray core, gray grits
12	Jar	1019	103	Brown-orange clay, gray core, some grits
13	Jar	1022	103	Red clay, very small grits
14	Jar	1026/1	103	Red clay, very small grits

and Fig. 10:9 is carinated below the rim. Similar bowls were unearthed at Kabri Level 3, which dates to MB IIB (Kempinski, Gershuny and Scheftelowitz 2002: Figs. 5.49:16, 17; 5.56:1), but the bowls could also be ascribed to MB IIA (Beck 2000: Figs. 10.1:19; 10.13:14; 10.18:7; Getzov 2002: Fig. 3:6). Figure 11:1 is a deep, open bowl, red slipped and burnished; a similar bowl was found at Kabri in Tomb 498, Phase 2, and dated to late MB IIA (Kempinski 1989:32, Fig. 17:3). Another deep bowl with an inverted rim (Fig. 12:1) is similar to a bowl discovered at Kabri in L462 of Levels 3 and 4, and was thus dated to MB IIA–B (Kempinski, Gershuny and Scheftelowitz 2002: Fig. 5.46:3). The open bowl or goblet in Fig. 13:3, with incised lines below the rim, is very similar to a unique group of goblets from Kabri Level 3, although without slip, dated to MB IIB (Kempinski, Gershuny and Scheftelowitz 2002:110, Fig. 5.47:5–8). Figure 11:2 also has well-incised lines below the rim, but the bowl is quite large and more closed; no parallel was found.

Carinated Bowls.— Figure 12:10 is red slipped and burnished, and dates to MB IIA (Kempinski, Gershuny and Scheftelowitz 2002: Fig. 5.45:1). The carinated bowls with simple rims (Figs. 10:2, 10; 12:3, 11–13) are characteristic of late MB IIA and the MB IIB transition, and are found at Kabri (Kempinski 1990:36, Fig. 20:7). The carinated bowls in Figs. 13:4 and 15:6 are typical of MB IIB and continue into LB I (Kempinski 1989: Fig. 18:8; 1992:19).

Fig. 12 ▸

No.	Object	Basket	Locus	Description
1	Bowl*	2192	218	Brown clay, gray core, grits
2	Bowl	2181	218	Brown clay
3	Bowl	2181/2	218	Brown-red clay, brown core, white grits
4	Cooking pot	2178	218	Brown clay, large white grits
5	Jar	2180	218	Light brown clay, brown-gray core, grits
6	Jar*	2188	218	Red clay, brown-gray core, grits
7	Pestle	2179/1	218	Stone
8	Pestle	2179/2	218	Stone
9	Bowl	2168/2	212	Brown clay, grayish core, some grits
10	Bowl	2175	212	Orange clay, few grits, red slip and burnish on ext. and int. of rim
11	Bowl	2168/1	212	Reddish clay, light brown core
12	Bowl	2172	212	Brown clay, small grits, red slip and burnish on ext. and int. of rim
13	Bowl	2168/3	212	Light brown clay, gray core, small grits
14	Cooking pot	2165/3	212	Dark brown, very small grits
15	Jar	2165	212	Reddish surface, brown-yellow clay
16	Jar	2176/1	212	Brown-reddish clay, gray core, very small grits
17	Stopper	2176/2	212	Light brown clay
18	Loomweight	2109	212	Clay
19	Loomweight	2110	212	Clay
20	Weight	2112	212	Stone

* Part of floor

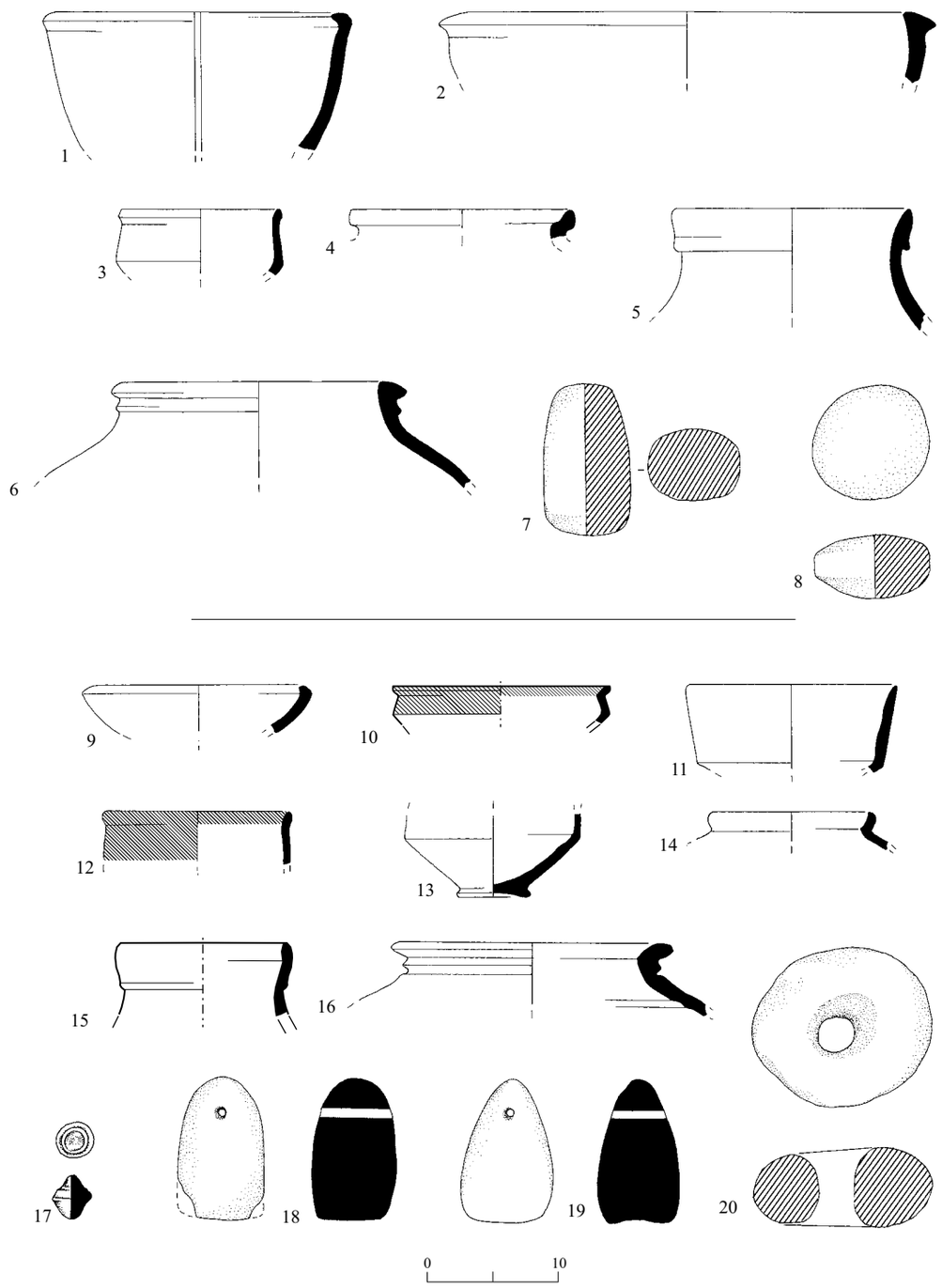

Fig. 12. Square B, Level I: MB II finds from L218 (1–8) and L212 (9–20).

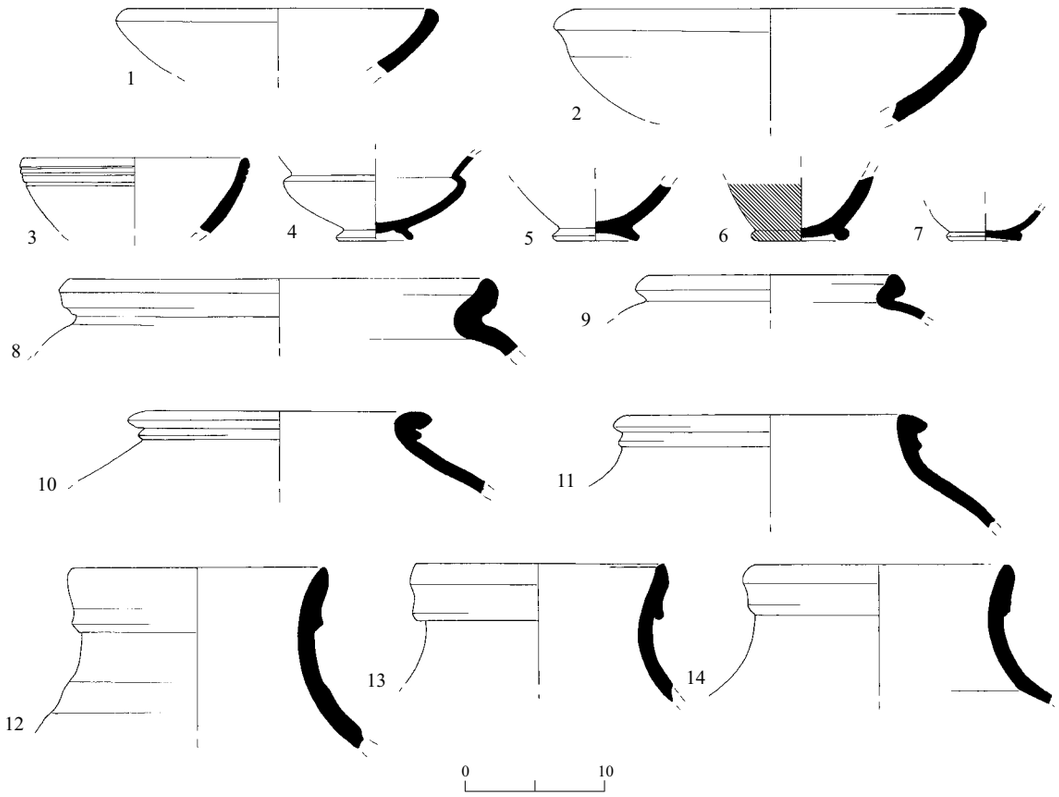

Fig. 13. Square B, Level II: MB II pottery (L211).

No.	Object	Basket	Description
1	Bowl	2130	Brown clay, large gray core, some grits
2	Bowl	2134	Brown clay, large gray core, some grits
3	Bowl/Goblet	2149	Brown-gray clay, some grits
4	Bowl	2159	Brown clay, small white grits
5	Base	2137/2	Brown-red clay, brown core, grits
6	Base	2132/2	Red clay, large gray core, few grits, red slip and burnish
7	Base	2150	Brown surface, brown-gray fine clay
8	Cooking pot	2132/1	Brown clay, calcite grits
9	Cooking pot	2129/1	Brown clay, grits
10	Jar	2137	Light brown-reddish clay, grits
11	Jar	2188	Red clay, brown-gray core, grits
12	Jar	2159	Brown clay, gray core
13	Jar	2128	Brownish surface, brown-gray clay, some grits
14	Jar	2129/2	Brown-yellowish clay, some grits

Krater.— Figure 11:3 has a thickened or everted rim. Parallels found at Afeq Level XIVb and Kabri Levels 4–3 date it most probably to the later part of MB IIA (Beck 2000: Fig. 10.12:15, 16; Kempinski, Gershuny and Scheftelowitz 2002: Fig. 5.51:1).

Cooking Pots.— Only one type of cooking pot was found (Figs. 11:10; 12:4, 14; 13:8, 9), with a thickened or everted rim, sometimes rounded at the edge or with an inner gutter. This type is dated at Kabri to MB IIB (Kempinski, Gershuny and Scheftelowitz 2002: Fig. 5.56), but is found during MB IIA, for example, at Afeq (Beck 2000: Figs. 10.1:21, 23; 10.2:11).

Jars.— Most of the jars presented date to MB IIA, but often continue into MB IIB. The jars are divided, when possible, according to Beck's types from Afeq, but as only rims were found, they are often difficult to date. Beck's Type SJ1 was found in most MB II loci (Figs. 11:8, 12, 13; 13:14; 14:8; 15:8). This type dates at Afeq to the Pre-Palace and Palace phases (Beck 2000:233), and is found at Kabri throughout MB IIA (Miron 1988: Fig. 20:6). Figures 11:5, 14, and 14:9, 14 are, perhaps, also Type SJ1, but have a shorter rim and are found at Kabri Level 3 (Kempinski, Gershuny and Scheftelowitz 2002: Fig. 5.57:12). A similar rim (Fig. 15:9), but shorter and more rounded, is also paralleled at Kabri Level 3 (Kempinski, Gershuny and Scheftelowitz 2002: Fig. 5.57:11).

Beck's Type SJ2 was also found in many of the loci (Figs. 10:5; 11:6, 7; 12:5, 15; 13:12, 13; 14:2, 13; 15:7). This type is popular throughout MB IIA (Beck 2000:233) and was also encountered in the previous excavations at Kabri (Kempinski, Gershuny and Scheftelowitz 2002: Fig. 5.57:3).

Another well represented jar or pithos is Beck's Type SJ4 (Figs. 10:11; 11:11; 12:6, 16; 13:10; 14:6). At Afeq, it dates to the Palace and Post-Palace phases (Beck 2000:233), and at Kabri, to Levels 4–3 (Kempinski, Gershuny and Scheftelowitz 2002: Fig. 5.57:4). Smaller jars with a molded rim (Figs. 10:6; 14:7; 16:5) have a parallel from Level 4 at Kabri

Fig. 14 ▸

No.	Object	Basket	Locus	Description
1	Bowl	2100/3	210	Light brown clay, some grits
2	Jar	2100/1	210	Brown-red clay, white grits
3	Jar	2101	210	Brown-red clay, brown core, large white grits
4	Jar	2100/2	210	Brown-red clay, grits
5	Loomweight	2106	210	Clay
6	Jar	2077/3	207	Light brown surface, brown-gray clay, grits
7	Jar	2077/2	207	Reddish clay, grits
8	Jar	2091	207	Light gray, many large grits
9	Jar	2077/1	207	Red clay, brownish core, many grits
10	Bowl	2094	206	Light brown-reddish clay, light brown core, grits
11	Bowl	2086	206	Reddish clay, dark brown core, few grits
12	Jar	2105	206	Red clay, some grits
13	Jar	2088/1	206	Light brown clay
14	Jar	2065	206	Light brown clay, thin grayish core, grits
15	Jar	2095	206	Reddish clay, large gray core, small white grits
16	Baking tray	2088/2	206	Brown clay, grits, burnished
17	Sherd	2094	206	Reddish clay, brown-gray core, some large grits, red slip and burnish
18	Loomweight	2064	206	Clay

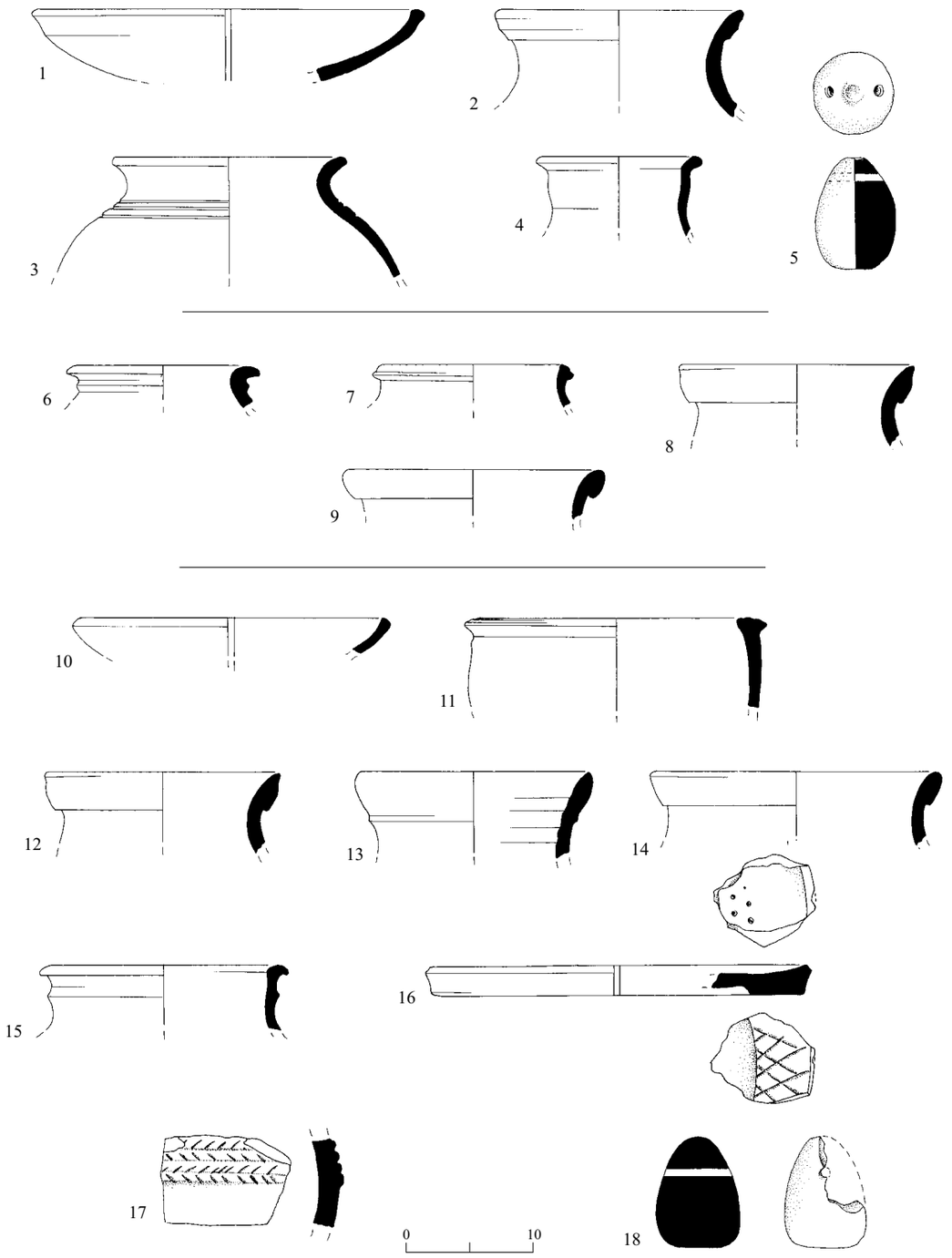

Fig. 14. Square B, Level III: MB II finds from L210 (1–5), L207 (6–9) and L206 (10–18).

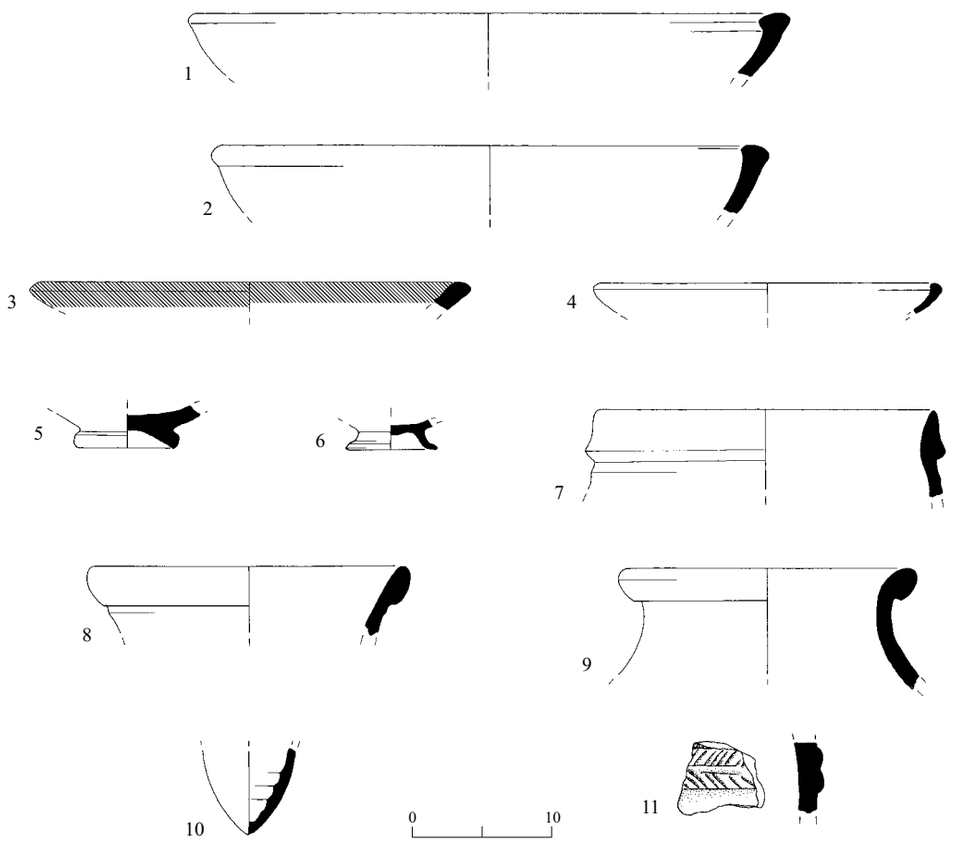

Fig. 15. Square B, Level IV: MB II pottery (L201).

No.	Object	Basket	Description
1	Bowl	2045	Brown-orange clay, brown core, grits
2	Bowl	2034	Light brown clay, large gray core, grits
3	Bowl	2072	Brown clay, grits, red slip
4	Bowl	2029	Orange clay, light brown core
5	Bowl	2022	Brown-orange clay, gray core, white grits
6	Bowl	2024/1	Buff-white fine clay
7	Jar	2047	Orange clay, grits
8	Jar	2024/2	Reddish clay, large brown core, small grits
9	Jar	2035	Reddish clay, gray core, white grits
10	Juglet	2036	Exterior orange clay, interior yellow clay, grits
11	Sherd	2027	Brown clay, gray core, many white grits

(Kempinski, Gershuny and Scheftelowitz 2002: Fig. 5.44:18).

Other rare jars are Fig. 10:4, with a short simple rim, for which no parallels were found; Figs. 11:4 and 14:12, dated to late MB IIA at Afeq Level XII, and to MB IIB at Kabri (Kempinski 1989:33, Fig. 18:9; Beck 2000: Fig. 10.20:9, 10); Fig. 14:4, with a high neck

and a short out-turned rim, paralleled at Kabri (no level mentioned; Kempinski, Gershuny and Scheftelowitz 2002: Fig. 5.57:19); and Fig. 14:15, with a ridge on a high neck and a short, out-turned rim, paralleled at Kabri Level 3 (Kempinski, Gershuny and Scheftelowitz 2002: Fig. 5.41:9).

Juglet.— Few juglets were found (Figs. 10:7, 8; 15:11). They are oval shaped, but difficult to date, as the necks and rims are missing.

Baking Tray.— The baking tray (Fig. 14:16) has a broad, profiled rim, typical of MB II trays (Kempinski, Gershuny and Scheftelowitz 2002:117, Fig. 5.54.1, 3).

Miscellaneous Finds.— Six cone-shaped loomweights were retrieved in the excavation, all in Sq B (Figs. 12:18, 19; 14:5, 18); many loomweights were unearthed in previous excavations at the site (Oren 2002b:363). Other miscellaneous finds include a few pestles (Fig. 12:7, 8); a small, finely finished stopper (Fig. 12:17); and a donut-shaped stone weight (Fig. 12:20), perhaps used to weight a tool (for agricultural purposes?).

The Iron Age II (Fig. 16)
Iron II pottery was encountered only in the large pit (L204) in Sq B.

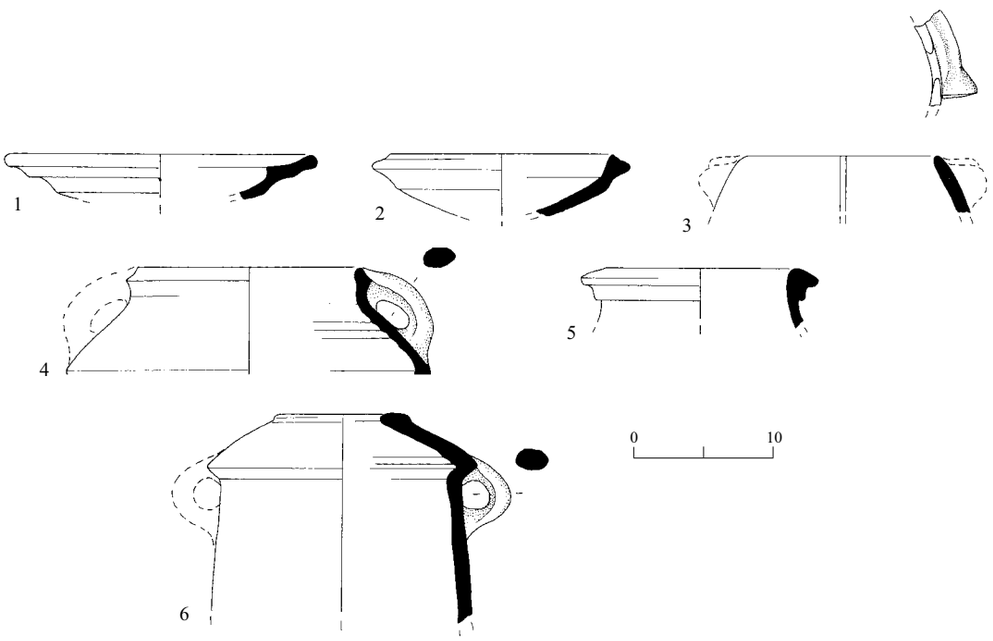

Fig. 16. Square B: Iron II finds from Level V (L2040).

No.	Object	Basket	Description
1	Bowl	2049	Red clay, fine
2	Bowl	2019	Red clay, fine
3	Bowl	2085	Brown clay, brown-gray core, grits
4	Cooking pot	2163	Brown-red clay, dark brown core, white grits
5	Jar	2145	Reddish clay, gray core, grits
6	Jar	2098	Red clay, brownish core, very small grits

Bowls.— Typical Iron Age bowls (Fig. 16:1, 2) made of fine clay were found, with parallels from Kabri (Lehmann 2002: Figs. 5.76:22; 5.77:1, 11). Bowl 16:3 is made of cooking-pot ware, but has a bar handle usually found on bowls (e.g., Gal and Alexandre 2000: Fig. III.78:6).

Cooking Pot.— This typical Iron II cooking pot (Fig. 16:4) is known from many sites, including Kabri Level E2 (Lehmann 2002: Fig. 5.84:5, 6).

Jars.— Two jars are illustrated (Fig. 16:5, 6). The jar in Fig. 16:6, with its sharply carinated shoulders, dates to Iron II (Lehman 2002:198, Type 2, Fig. 5.82:12, 13).

Figurine.— A head of a figurine was discovered (Basket 2193, L204; Fig. 17). The figurine, made of brown clay, has a very small hole in the back, traces of red paint, and, perhaps, some kind of ribbon on the forehead. The ears are not shown, as is the case on many figurines from the period. It resembles figurines found previously at the site, and is most probably of coastal Phoenician origin (Oren 2002a: Fig. 10.2).

SUMMARY AND CONCLUSIONS

The Early Chalcolithic Period

The wall in Sq A seems to have been built upon remains from the Early Chalcolithic period, as suggested by the small number of sherds and a possible layer (floor?). In Sq C, Early Chalcolithic sherds were found in a thick layer below the architectural remains and in Level I (dated to EB I according to Early Bronze sherds).

In the previous excavations conducted at Tel Kabri, Early Chalcolithic remains were found mainly in proximity to ‘En Giaḥ, but also in Area E, near ‘En Shefa‘ (Kempinski 2002:449). Thus, the present excavation may possibly enlarge the areas known to have been settled during this period.

The Early Bronze Age

As mentioned above, both Levels I and II in Sq C should be dated to EB I. Level II in Sq C was built directly above the remains of Level I. Both levels were close to the surface and their loci could easily have been contaminated by later material. The curvilinear building and ceramic finds from Level II indicate that this level should

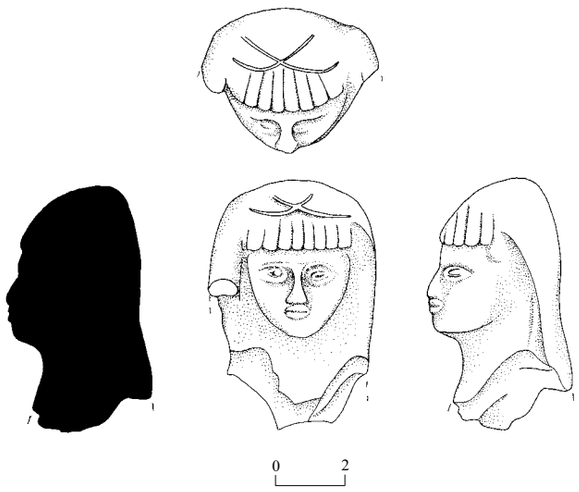

Fig. 17. Figurine.

be dated to EB I; an EB IB date would probably be more precise, as no typical EB IA sherds were found. Thus, if the building in Level I is to be dated to later than the Early Chalcolithic period, it can only be given an EB I date. In any case, results from the excavation leave no doubt that the EB I settlement reached this part of the tell, which supplements information gleaned from the previous excavations. The remains in Sq C are located on the fringe of the area settled in this period; Level II in Sq C is equivalent to Stratum 9 of the Tel Aviv University expedition at the site (Scheftelowitz 2002a:23–25; Kempinski 2002:449–450).

The Middle Bronze Age II

In general, the pottery assemblage seems to date to the later part of MB IIA and the transition to MB IIB, with a few loci dated to MB IIB. The closed carinated bowl and the 'cut-away-rim', both typical MB IIA vessels, are missing, as is Beck's storage jar Type SJ3, which is more popular in the earlier part of MB IIA. The only representative MB IIB vessels found in the excavation are the open carinated bowls and the bowl or goblet in Fig. 13:3, which were found in Loci 211 and 201, respectively. As the open carinated bowls, such as that in Fig. 10:2, are typical of the MB IIA–B transition, they help date the lowest layer in Sq A to no earlier than the transitional period. The upper layer (L103) does not contain any unquestionably MB IIB pottery. Therefore, all layers in Sq A are from late MB IIA, if not the MB IIA–B transition.

The massive wall in Square A was, perhaps, dug into these layers, as its western face was sloped. No foundation trench was found. While it was part of the MB II fortifications of the tell, it is hard to determine whether the uncovered layers adjacent to the massive wall were part of the rampart surrounding the tell, as only a very small area was excavated. The date of the layers does correlate with that of the rampart excavated by the Tel Aviv expedition in their Area T (Kempinski 2002:451). It is not known if the walls surrounding the palace located some 50 m westwards reached W102.

Square B, situated some 30 m west of the palace, yielded domestic remains of walls and floors, sherds, and loomweights. Level I contained an open, carinated bowl, which places Level I in late MB IIA or at the MB IIA–B transition. In Level II, two MB IIB vessels were found, thus dating the remaining strata as well to MB IIB, perhaps to the beginning of the period, as only a few typical MB IIB sherds were uncovered.

The Iron Age

The only Iron Age pottery unearthed was excavated in a pit located inside the Iron Age settlement (Kempinski 2002:452). Many pits from the period are known from previous excavations.

NOTES

[1] The excavation (Permit No. A-3056), on behalf of the Israel Antiquities Authority, was directed by Dina Shalem, with the assistance of Karen Covello-Paran (area supervisor), Vadim Essman and Avi Hajian (surveying), and Hagit Tahan (pottery drawing).

[2] Each square is described separately according to the levels observed there; no stratigraphical relationships could be determined between the various levels in the squares.

[3] The pottery finds dated here to the Early Chalcolithic period were defined in the final report of the Tel Aviv University excavation as Late Neolithic (Scheftelowitz 2002).

REFERENCES

Beck P. 2000. Area A: Middle Bronze IIA Pottery. In M. Kochavi, P. Beck and E. Yadin eds. *Aphek-Antipatris* I: *Excavation of Areas A and B, the 1972–1976 Seasons* (Tel Aviv University Institute of Archaeology Monograph Series No. 19). Tel Aviv. Pp. 173–238.

Frankel R., Getzov N., Aviam M. and Degani A. 2001. *Settlement Dynamics and Regional Diversity in Ancient Upper Galilee* (IAA Reports 14). Jerusalem.

Gal Z. and Alexandre Y. 2000. *Ḥorbat Rosh Zayit: An Iron Age Storage Fort and Village* (IAA Reports 8). Jerusalem.

Garfinkel Y. 1999. *Neolithic and Chalcolithic Pottery of the Southern Levant* (Qedem 39). Jerusalem.

Getzov N. Forthcoming. *Ḥorbat ʻUẓa* I: *Final Report of the 1991 Excavations* (IAA Reports). Jerusalem.

Golani A. 2003. *Salvage Excavations at the Early Bronze Age Site of Qiryat Ata* (IAA Reports 18). Jerusalem.

Kempinski A. 1989. Some Samples of Pottery from Tomb 498. In A. Kempinski ed. *Excavations at Kabri: Preliminary Report of the1988 Season.* Tel Aviv. Pp. 31–35 (Hebrew).

Kempinski A. 1990. Tomb 984 in Area B. In A. Kempinski and W.-D. Niemeier eds. *Excavations at Kabri: Preliminary Report of the 1989 Season.* Tel Aviv. Pp. 32–38 (Hebrew).

Kempinski A. (N. Scheftelowitz and R. Oren eds.) 2002. *Tel Kabri: The 1986–1993 Excavation Seasons* (Tel Aviv University Institute of Archaeology Monograph Series No. 20). Tel Aviv.

Kempinski A., Gershuny L. and Scheftelowitz N. 2002. Pottery: Middle Bronze Age. In A. Kempinski (N. Scheftelowitz and R. Oren eds.). *Tel Kabri: The 1986–1993 Excavation Seasons* (Tel Aviv University Institute of Archaeology Monograph Series No. 20). Tel Aviv. Pp. 109–175.

Lehmann G. 2002. Pottery: Iron Age. In A. Kempinski (N. Scheftelowitz and R. Oren eds.). *Tel Kabri: The 1986–1993 Excavation Seasons* (Tel Aviv University Institute of Archaeology Monograph Series No. 20). Tel Aviv. Pp. 178–222.

Miron E. 1988. Area C2: Stratigraphy, Architecture and the Ceramic Assemblage. In A. Kempinski ed. *Excavations at Kabri: Preliminary Report of the 1987 Season.* Tel Aviv. Pp. 15–29 (Hebrew).

Oren R. 2002a. Figurines. In A. Kempinski (N. Scheftelowitz and R. Oren eds.). *Tel Kabri: The 1986–1993 Excavation Seasons* (Tel Aviv University Institute of Archaeology Monograph Series No. 20). Tel Aviv. Pp. 349–355.

Oren R. 2002b. Loom Weights and Spindle Whorls. In A. Kempinski (N. Scheftelowitz and R. Oren eds.). *Tel Kabri: The 1986–1993 Excavation Seasons* (Tel Aviv University Institute of Archaeology Monograph Series No. 20). Tel Aviv. Pp. 363–372.

Scheftelowitz N. 2002a. Stratigraphy and Architecture I: Area B. In A. Kempinski (N. Scheftelowitz and R. Oren eds.). *Tel Kabri: The 1986–1993 Excavation Seasons* (Tel Aviv University Institute of Archaeology Monograph Series No. 20). Tel Aviv. Pp. 19–34.

Scheftelowitz N. 2002b. Pottery: Late Neolithic; Early Bronze Age. In A. Kempinski (N. Scheftelowitz and R. Oren eds.). *Tel Kabri: The 1986–1993 Excavation Seasons* (Tel Aviv University Institute of Archaeology Monograph Series No. 20). Tel Aviv. Pp. 91–108.

Shalem D. 2006. Be'er Ẓonam. *HA–ESI* 118 (May 1). http://www.hadashot-esi.org.il/report_detail_eng.asp?id=285&mag_id=111 (accessed 30.7.2008).