'Atiqot 93, 2018

Late Byzantine and Early Islamic Bathhouse Remains and Vestiges of Earlier Periods at Azor

Edwin C.M. van den Brink, Lev Kapitaikin and Yehudah Rapuano

Introduction

During the winter of 1998, salvage excavations were conducted at Azor (Arabic: Yazûr).[1] This town is situated about 6 km from the present-day Mediterranean seashore, just southeast of Tel Aviv-Yafo in the central coastal plain (Fig. 1). The local vegetation is typical of the lowland Mediterranean zone and the coastal dune area (Orni and Efrat 1976:137, 145, 165). The climate is typical of the coastal plain: mild winters and hot, humid summers with a mean annual temperature of 22° C and c. 550 mm annual precipitation.

The excavation site is located in the northeastern part of Azor, about 100 m southeast of a large Crusader fortress (Château des Plains) atop Tel Azor, which still awaits excavation. The Septuagint (Josh. 15:45) lists this site among the cities of Dan, and an Assyrian document mentions its conquest by Sennacherib (Negev and Gibson 2001:64). Since the early 1920s, over 40 archaeological excavations have been conducted in the town of Azor and its immediate vicinity. For excavations up until 1997, see Golani and van den Brink 1999: Plan 1, Appendix 1; for excavations between 1998 and 2002, see Table 1.[2]

The Excavation

The excavations were conducted in an open plot surrounding a former cinema, at the corner of Herzl and Sprinzak Streets (Fig. 2; see also Golani and van den Brink 1999: Plan 1: No. 37). Prior to the beginning of the excavations in November 1998, the presence of archaeological

---

[1] Salvage excavations were initially conducted during November 15–26, 1998, then resumed during December 7–22, 1998. Work was directed on behalf of the Israel Antiquities Authority (IAA) by Edwin C.M. van den Brink, with the participation of Vadim Essman (surveyor), Yousef Rahman (administrator), Marina Shuiskiya (pottery plates) and Tsila Sagiv (photographer). Tsvi Shacham of the Jaffa Museum and Eli Yannai (IAA) visited the site and assisted us during the course of the excavations. The authors would like to thank Tsvi Shacham (Eretz Israel Museum, Tel Aviv, Curatorial, Emeritus) for his consultations on various aspects of the uncovered bathhouse remains.

[2] The manuscript was submitted for publication in 2002.

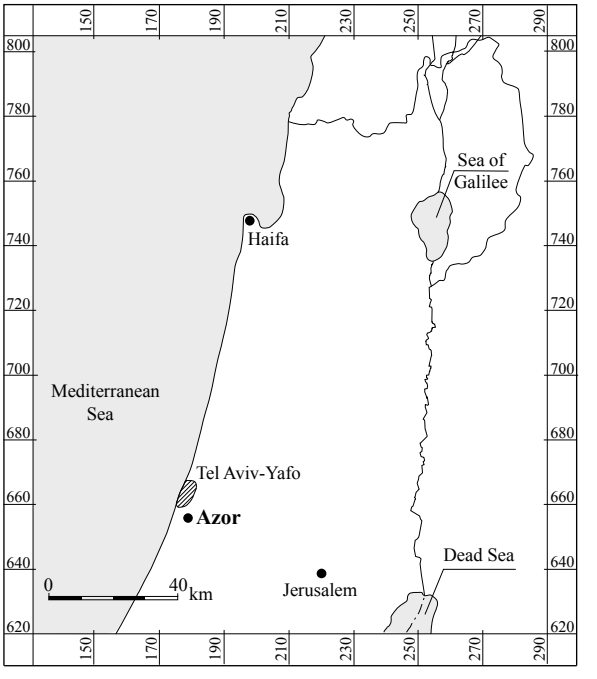

Fig. 1. Location map.

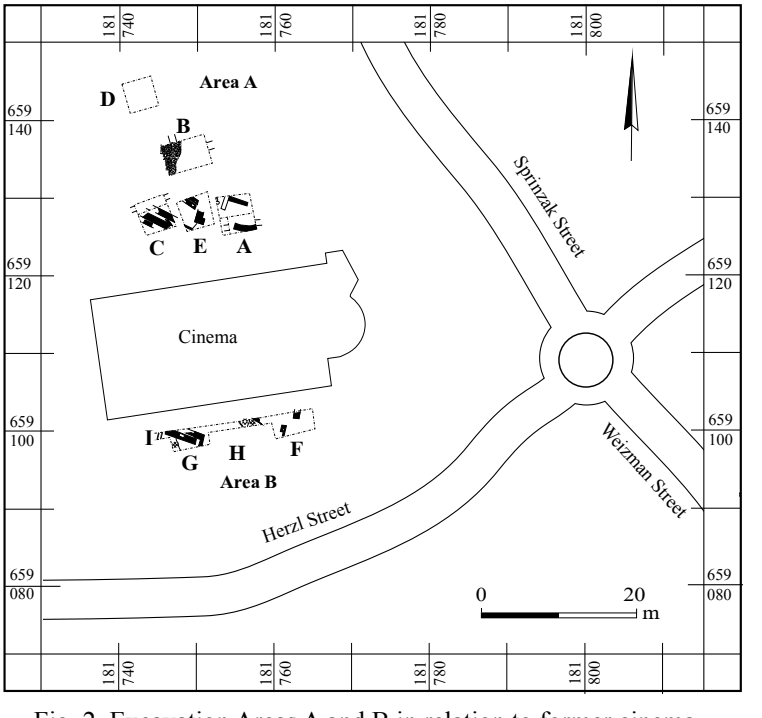

Fig. 2. Excavation Areas A and B in relation to former cinema.

Table 1. Excavations at Azor between 1998–2002

Year	Excavator	Findings	Publications
1998	E. Manor		
1998	A. Dagot	Late Byzantine-Early Islamic	Dagot 2014
1998	I. Akus	Byzantine-Early Islamic	Yekutieli and Akus 2011
2000	H. Torgë	Umayyad remains	Torgë 2005
2000	Y. Govrin		
2001	A. Bouchenino	LB II and Iron Age I tombs	Bouchenino 2006
2002	A. Glick	No archaeological finds	Glick 2006
2002	M. Peilstöcker	Byzantine and Ottoman remains, not *in situ*	Peilstöcker, forthcoming

remains had been established in four of six test trenches, each 0.6 m wide, which were dug mechanically under the supervision of Lior Zak. Subsequently, five squares (A–E) were opened north of the cinema structure (Area A; surface level c. 25.5 m asl), in the immediate vicinity of and sometimes incorporating the test trenches. During the excavation, a narrow, 20 m long trench was dug mechanically to accommodate modern infrastructure south of the cinema building (Area B; surface level c. 24.1 m asl). It was expanded southward for additional probing when archaeological deposits were noticed (Sqs G and F); the center of the trench (H) was not widened.

The bulk of the finds dates to two main periods: the Byzantine period, from the fifth to the first third of the seventh centuries CE, and the Early Islamic period (Umayyad and Abbasid), from the close of the Byzantine period to the end of the ninth century CE. Sporadic finds of the Early Bronze and Iron Ages were recovered in fills deriving from Sqs E (Area A) and G (Area B) respectively.

Area A

Based on the information derived from the preliminary test trenches, sterile topsoil was mechanically removed in the five squares, which were then excavated manually to varying depths below the surface (except in Sq D, where circumstances did not enable manual excavation below the topsoil level). The finds unearthed in each of the remaining four squares (A–C, E) are described below chronologically, from late to early (Table 2).

Square A (Plan 1)
This 4.25 × 5.00 m probe incorporated on its southern side one of the test trenches mechanically dug to a level of 23.30 m asl (Fig. 3).

Stratum 1. Prior to excavation, c. 1.0–1.2 m of sterile topsoil was mechanically removed. This stratum contained a modern-day ceramic sewage-pipe system (L104; at 24.50 m asl; Fig. 4), most likely belonging to the abandoned cinema located a few meters to the south.

Table 2. Stratigraphic Overview

Stratum	Description	Square A	Square B	Square C	Square E
Area A					
1	Topsoil	L100, L102, L104	L300	L200, L201, L202	
1/2	Fills	L101, L103a (loose fill above plastered Floor 103b)	L301, L302 (modern pit)	L203	L400
2	Early Islamic bathhouse remains	Plastered W100; plastered Floor 103b; L105a (sand layer on top of cobblestone Floor 105b)	L303 (hypocaust remains, ceramic pipes and tiles)	Plastered W200; plastered W201 (NE face lined with ceramic tiles), L204, L205, L207	W400–402, W404, L402, L407
2/3	Late Byzantine/Early Islamic bathhouse remains		L304 (hypocaust remains)	L206 (with cobblestone pavement and cement conduit)	W403, L401, L403, L404, L410
3	Late Byzantine bathhouse remains	W101, W102, cobblestone Floor 105b, L106 (hypocaust debris including cement conduit), L107 (hypocaust debris with upside-down storage jars)	Unexcavated	Unexcavated	L405, L406 (fills with hypocaust debris), L408, L409 (cement conduits)
4	Fills	L108 (sterile sand below L106 and foundation level of W102)			L411 (top of EB I layer)
5	Sandy soil	L109 (fill with many late Byzantine potsherds)			Unexcavated
Stratum	Description	Square F	Square G	Square H	
Area B					
1	Topsoil	L500	L600		
2	Late Byzantine structural remains	W500, W501, L501, L502	W600, W601, L601	L700, W701	
3	Iron Age fill	Unexcavated	L602, L603		

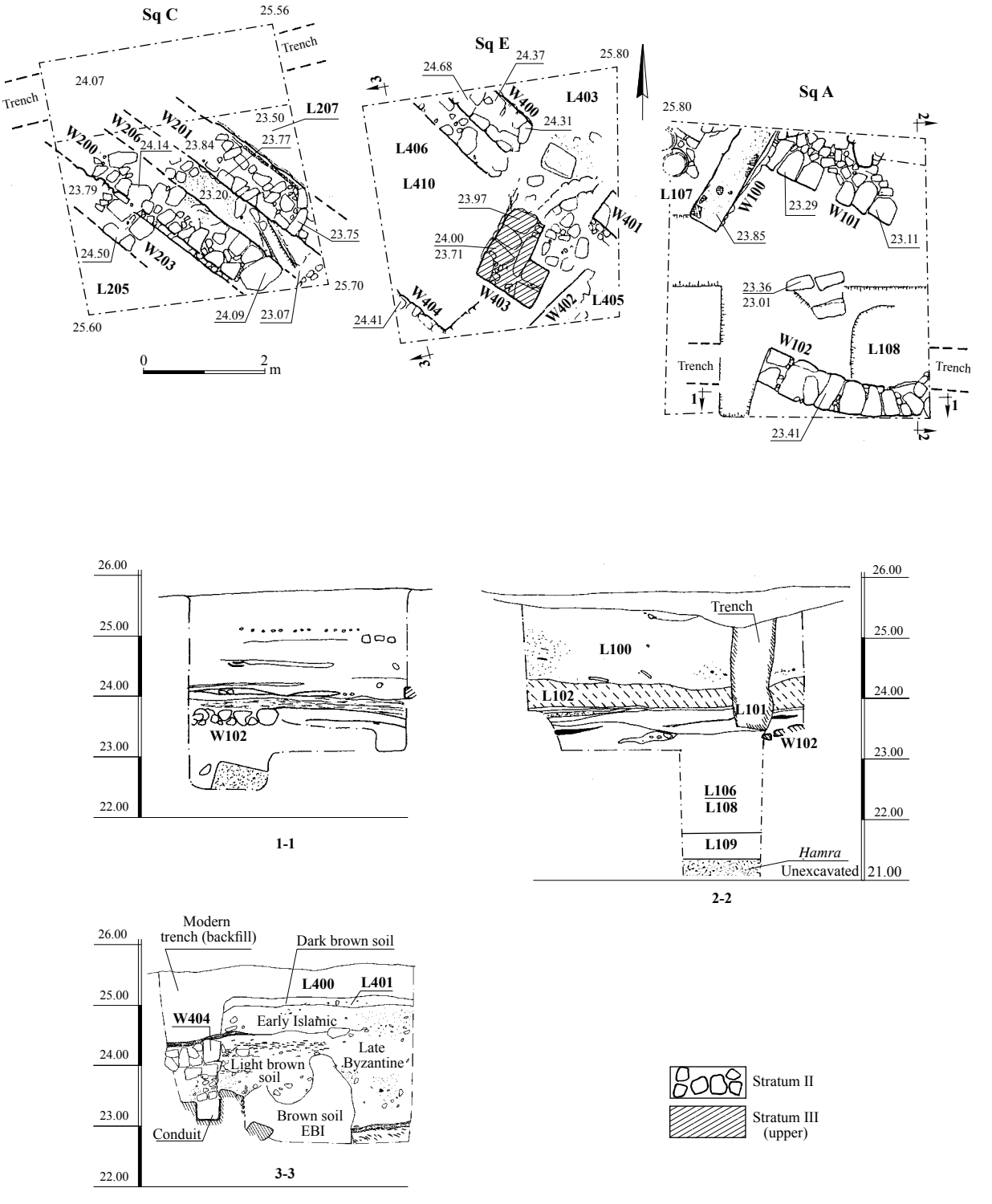

Plan 1. Area A, Sqs A, C, E, plan and sections.

Fig. 3. Area A, Sq A, eastern balk; on the right, the mechanically dug and backfilled test trench cutting through Strata 1 and 2 until just above the foundation level of W102 (Stratum 3); in lower right, part of W102 protruding from the eastern and southern balks.

Fig. 4. Area A, Sq A, southern balk and part of the western balk; in the corner of the western section (upper right) is part of the cinema's drainage pipe (Stratum 1); in center, below the foundation course of W102 (Stratum 3), is the top level of the sterile sand layer (L108, Stratum 4).

Fig. 5. Area A, Sq A. Top of plastered W100 (Stratum 2) protruding from the northern section, looking northwest.

Stratum 2. Beneath this layer, a 0.35–0.50 m thick fill of loose brownish soil (L103a) covering a plastered floor (L103b) was excavated manually. This floor was exposed throughout most of Sq A. A plastered segment of a wall oriented northeast–southwest (W100) protruded from the northern balk of Sq A and was associated with the floor (Fig. 5). This wall consisted of four to five courses of dry-laid, medium-sized fieldstones (each stone 15–20 cm in diameter), and was preserved to a height of 0.45 m. The eastern face (1.95 m long) and the short (0.5 m) southern end of W100 were covered with thick lime plaster tempered with charcoal grits. Judging from the thick soot remains on this plaster, the wall must have been exposed to fire, intentionally or not. The western face of W100 had not been plastered and lacked any traces of soot. This plastered wall segment and associated Floor 103 probably belonged to a bathhouse, of which additional remains (including a segment of a hypocaust) were unearthed in Sq B (L303, Stratum 2; see below).

Ceramic remains, including fragments of fine wares (Fig. 21:14), glazed wares (Fig. 22:2, 7), Khirbat al-Mafjar jars, metallic wares (Fig. 23:1, 24), buff wares (Fig. 24:1),

cooking wares (Fig. 25:5) and coarse wares (Fig. 26:9, 10) were found in the fill and on the plaster floor, and date the architecture of Stratum 2 to the Early Islamic period (see below).

Stratum 3. Below W100 was a cobblestone floor (L105b; each stone 12–14 cm in diameter), upon which was a 5 cm layer of sand (L105a) that apparently provided a level foundation for the construction of W100 (Stratum 2). Immediately below plastered Floor 103, additional architectural elements of Stratum 3 were uncovered, including two segments of dry-laid, stone-built walls (W101, W102). In the northern part of Sq A, W101 is associated with the above-mentioned cobble-paved floor (L105b). All that is preserved of this northwest–southeast oriented wall is a single foundation course of large *kurkar* slabs, c. 10 cm high. In the southern part of the square, the foundation course of W102, a somewhat curved wall segment (Plan 1: Section 1–1), is preserved to a height of 0.25–0.30 m and consists of large fieldstones, with smaller stones placed in the crevices between them. Notable are the remains of a circular segment of a cement conduit well below the levels of W100 and W102, reminiscent of the cement conduits uncovered in Sq E, Stratum 3 (L409, see below). It was found embedded in loose, reddish brown soil containing a few stones and some ashes, identified as hypocaust debris (L106).

Ceramic remains associated with these features date from the late Byzantine period. They include numerous fragments of the diagnostic 'Gazition' storage jar (Fig. 27:12; see Mayerson 1992), as well as three intact, ribbed, bag-shaped storage jars unearthed upside-down, one beside the other, in the northwestern corner of Sq A (L107; Fig. 6), and several more that protruded from the northern and western balks.[3]

Stratum 4. Below the Stratum 3 hypocaust remains in the southeastern sector of the square (L106), in apparently sterile, yellowish orange sand was reached at a depth of c. 3.2 m below the surface (Fig. 4), well below the foundation level of W102 (Plan 1: Section 2–2). Consequently, a probe was dug into it (1.5 × 1.5 m), revealing this sand layer to be c. 0.5 m thick (L108; Fig. 7), containing no anthropogenic materials.

Stratum 5. Below the sterile layer (L108), a thick fill of sandy soil containing mainly late Byzantine pottery was unexpectedly uncovered (L109; Plan 1: Section 2–2).

Sporadic ceramic sherds and basalt vessel fragments dating to the Early Bronze Age I and Iron Age I–II (including two possible cult-stand fragments; see Fig. 19) were observed randomly throughout the square (Loci 102, 106, 107; Figs. 17:3, 14; 18:10 respectively). The Iron Age pottery represents a spill-over of contemporary *in situ* deposits in Area B, Sq G (Loci 602, 603, see below), while the EB I finds suggest the presence of EB I occupation

[3] The dilemma as to whether or not to remove these jars from their findspot (and thereby risk undermining part of the northern and western balks of Sq A) became irrelevant when, on the night of November 25, 1998, looters unscrupulously stole these jars from the site.

Fig. 6. Area A, Sq A, L107. Three upside-down bag-shaped storage jars, protruding from the northern and western balks.

Fig. 7. Area A, Sq A. Small probe cutting through sterile sand layer (L108) and Byzantine fill layer underneath (L109), in southeastern corner of square.

deposits at deeper, unexcavated levels, as the top of late EB I *in situ* deposits were reached in adjacent Sq E (L411).

Due to a lack of time, work came to an end at a level of c. 4 m below the surface, before reaching the base of the Byzantine fill or the anticipated EB I deposits, let alone virgin soil.

Square B (Plan 2)

Stratum 1. Prior to excavation, illicit earth-removal activity performed by a bulldozer in the northern part of Area A had severely disturbed the eastern part of this square, removing 1.6–1.8 m of topsoil. A probe (4.0 × 5.5 m), incorporating in its northern and eastern parts segments of two of the mechanically dug test trenches, was manually excavated down to a level of c. 1.8 m below the surface.

Stratum 2. In the western part of the square, after removal of the topsoil (Loci 300–302), the much-disturbed remains of what appears to have been a subterranean heating system or hypocaust (L303; Fig. 8) was manually excavated, beginning at a depth of c. 1.6 m below the surface (24.47 m asl). These remains included numerous piles of ceramic tiles (21 × 21 × 5 cm each), apparently representing the collapsed columns that once supported the bathhouse floor. The original column-supported floor level did not survive, although fragments of a second, larger type of tile (35 × 24–25 × 2 cm) could well be the remnants of the caved-in floor construction. While no walls were discerned in this square to even partially indicate the original extent of this feature, it seems clearly related to the Early Islamic (Stratum 2) bathhouse remains uncovered in Sqs A (see above) and C (see below). In the southwestern corner of the square, *in situ* segments of two, possibly three, ceramic pipes (diam. c. 9 cm),

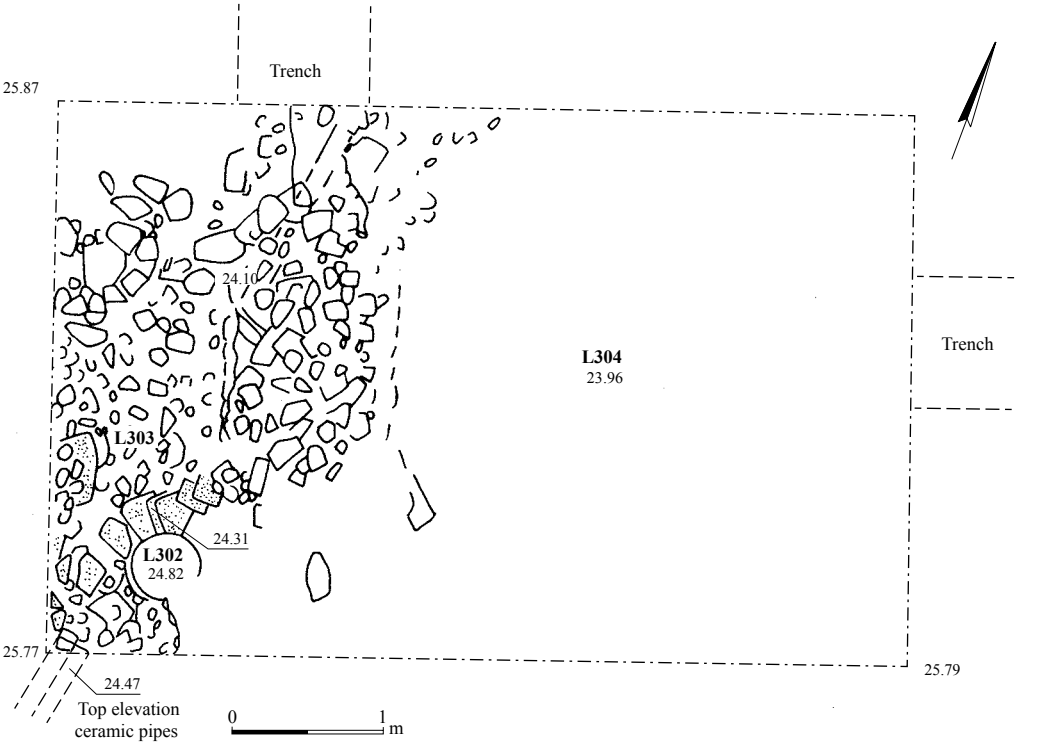

Plan 2. Area A, Sq B.

Fig. 8. Area A, Sq B. Hypocaust debris (L303) containing ceramic pipes and tiles in southwestern corner of square.

Fig. 9. Area A, Sq B. Fragment of three ceramic pipes from hypocaust debris (L303).

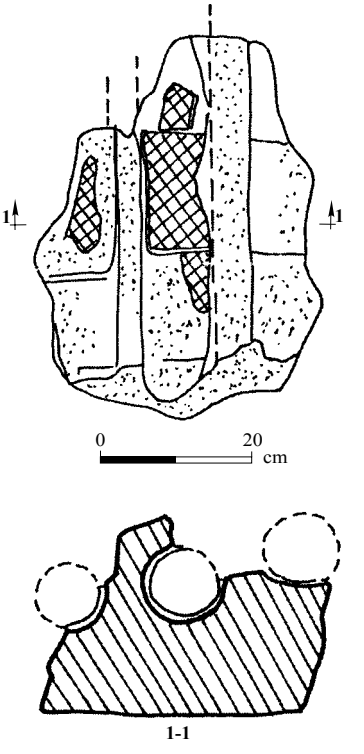

Fig. 10. Area A, Sq B. Three ceramic pipes, plan and section.

protruded 14 cm from the southern and western balks. The pipes were laid one beside the other, encased in a cement-like lime mortar tempered with small pieces of charcoal, typical of the Early Islamic period (Tsvi Shacham, pers. comm.). An additional mortar fragment with remnants of three embedded pipes (Figs. 9, 10) was uncovered in the hypocaust debris less than 1.5 m from these pipes; therefore, it can be assumed that three parallel ceramic pipes were originally laid here. These pipes likely served as a conduit that enabled the circulation of hot water (or air?) beneath the hypocaust's floor.

East of L303, additional hypocaust remains were uncovered in L304, notably below the base level of L303, and thus it is labelled Stratum 2/3 in Table 2. It is possible that the remains in L304 belong to an earlier (that is, late Byzantine) bathhouse phase in this locality. A similar stratigraphic indicator of such a scenario was recorded in Sq C (L206, Stratum 2/3; see Table 2). Unfortunately, due to time constraints, work was ceased before the excavation of this stratum could be satisfactorily completed.

In the eastern part of the square, beyond L304, no evidence of archaeological deposits was discerned.

Finds associated with the hypocaust debris in L303 include Early Islamic glazed wares (Fig. 22:5, 11), metallic wares (Fig. 23:21, 26, 28), buff wares (Fig. 24:6, 7, 13,14) and a

glass cosmetics bottle. These confirm the dating of this structure to the Early Islamic period (see below). Seemingly contradicting a possible late Byzantine date argued for L304, the pottery here also had a strong Early Islamic component, including metallic wares (Fig. 23:7–9, 19) and white-buff wares (Fig. 24:5, 11).

Square C (Plan 1)
Stratum 1. A probe (4.00 × 4.25 m) was initially prepared by mechanically removing a 0.5–0.7 m thick layer of sterile topsoil (L200, L202). However, when a previously unnoticed, mechanically dug test trench was exposed in the northern part of this square, the width of the probe was reduced by 1.25 m (now 3 × 4 m).

Stratum 2. Beneath another c. 0.5 m layer of loose, brown, featureless topsoil (Loci 201, 203), segments of two parallel stone walls were uncovered, oriented northwest–southeast (W200, W201). Only about 0.3 m of space separated these two walls (Fig. 11), which were unearthed at about the same depth as the hypocaust remains (L303) in Sq B. Wall 200 (0.7 × 4.0 m), runs into the northern and southern balks of the square and survived to a height of three to four courses (0.80–0.95 m high; 24.14–23.20 m asl). It is composed of two rows of dry-laid fieldstones with smaller stones inserted between the crevices. The southwestern side of W200 has a narrow facing of small stones; its northeastern face shows traces of lime plaster tempered with charcoal grits, reminiscent of plastered W100 in Sq A. Wall 201 (0.7 × 3.4 m) runs into the northern and eastern balks and survived to a height of three courses (0.55–0.65 m high; 23.84–23.20 m asl). It is constructed similarly to W200. The northeastern face of W201 is lined with plain ceramic tiles similar to those found in the hypocaust remains (L303) in Sq B. Its southwestern face, like the opposite northeastern surface of W200, bears traces of lime plaster.

The narrow space between the two walls (L206) is paved in its northwestern end with cobblestones, reminiscent of the Stratum 3 cobblestone floor (L105b) in Sq A. In the southeastern end of this space, clear traces of a cement channel or conduit are preserved to a depth of 0.2 cm, reminiscent of the Stratum 3 cement conduits (L409) exposed in the adjacent Sq E. Time constraints prevented us from determining if this conduit was directly associated with W200 and W201, or was cut by their foundations, that is to say, whether it belonged to Stratum 2 or Stratum 3; thus, it is labelled Stratum 2/3 (see Table 2). It can be assumed that, here again, there was a flow of hot water or hot air between (and possibly under) these two walls. As the northeastern face of W201 was lined with the same plain ceramic tiles as found in the hypocaust debris in Sq B, the architectural finds of Stratum 2 in both Sqs B and C are clearly related. In addition, the area southwest of W200 appears to have been paved with ceramic tiles (L205), although it was not completely uncovered.

Ceramic remains recovered on top of and between these two walls, including metallic wares (Fig. 23:10, 11, 15, 17, 20, 22, 27) and an oil lamp (Fig. 28:4), indicate a date within the Early Islamic period (see below), consistent with the Stratum 2 remains uncovered in Sqs A and B.

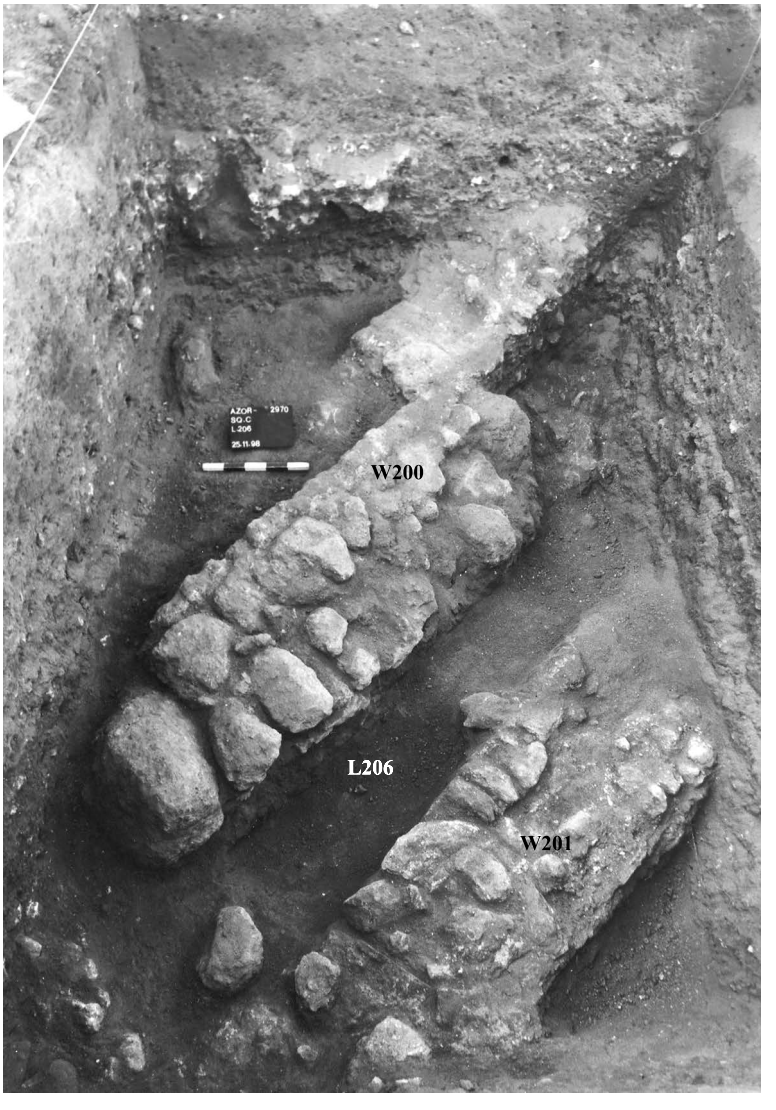

Fig. 11. Area A, Sq C. Parallel Walls 200 and 201 of Stratum 2, and L206 of Stratum 2/3, looking northwest.

Square E (Plan 1)

Two main strata with structural remains (Strata 2, 3) were discerned in this probe, comprising fragmentary remnants of stone-built architecture. Due to the presence of a backfilled test trench only 0.3 m north of the northern balk, initially unnoticed, part of this section caved in during a light rainfall (Fig. 12).

Stratum 1. In this probe (4 × 4 m), the 1.1 m thick sterile topsoil layer was mechanically removed (24.70–25.80 m asl).

Fig. 12. Area A, Sq E. Architectural remains of Strata 2 and 3 at the conclusion of the excavation, looking east. In the eastern balk, W401 is overlying hypocaust debris.

Stratum 2. A wall segment (W400) oriented northwest–southeast protruded from the northern balk. It is possible that W400 is the continuation of another wall (W401) that slightly protruded from the eastern balk at the same elevation (Fig. 12). Wall 400 (0.70 × 1.25 m) was preserved to a height of four courses of dry-laid fieldstones, 0.65 m high. In the southwestern and southeastern corners of the square, two additional wall segments with similar orientations (W404 and W402) protrude from the western and southern balks.

Stratum 3. Well below the foundation level of W400, W401 and W404, embedded in soil fills (L405, L406), were the remains of three cement-made water conduits (L409; Figs. 12, 13), one of which was possibly connected to the cement channel in L206 exposed in adjacent Sq C. The three conduits converged at a point in the south, central part of the square, in a platform-like arrangement of large flat fieldstones (W403; Fig. 14), whose original configuration did not survive. This platform may have continued in use in Stratum 2 as well, based on the elevations, and is thus labeled Stratum 2/3. Thick deposits of sooty soil and pieces of charcoal were found between these channels as well as on top of them (L403, L404). It is tempting to interpret these remains as vestiges of the hypocaust where water was heated and distributed via the various conduits throughout the late Byzantine/ Early Islamic bathhouse (Strata 2, 3).

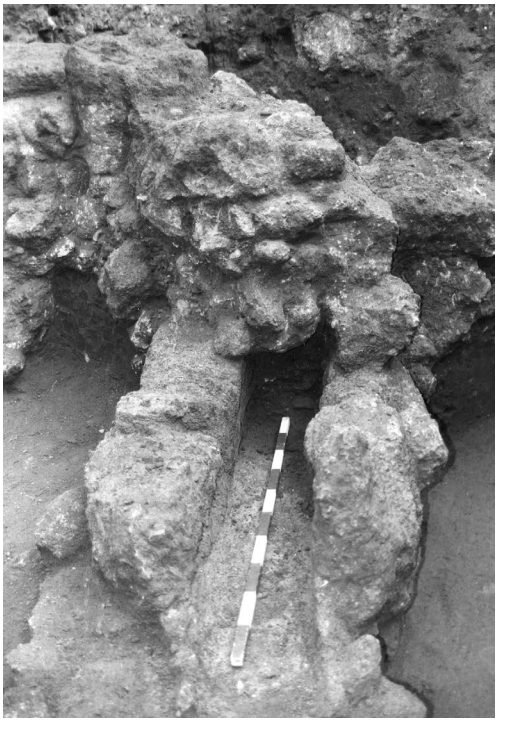

Fig. 13. Area A, Sq E. Detail of conduits (L409, Stratum 3).

Fig. 14. Area A, Sq E. In the center, W403 of Stratum 2/3, looking southeast.

Stratum 4. About 0.2 m below the Stratum 3 hypocaust remains, the top of a grayish, clayey soil fill (L411) containing mainly late EB I potsherds (Fig. 17:5–7, 11, 13) was exposed over a limited area; due to time constraints this stratum was not further probed.

Area B (Plan 3)

While the excavations in Area A were still ongoing, a trench was dug mechanically, without supervision, just south of the former cinema to accommodate modern infrastructure. It was therefore decided to examine this additional plot bordered by Herzl Street (see Fig. 2). For this purpose, the existing trench (H) was slightly extended, and after removal of 0.3 m of mainly sterile topsoil (Stratum 1; 25.44–25.14 m asl; see Table 2) widened at two selected locations, creating two 2 × 4 m probes (Sqs F and G respectively), in which *kurkar* wall foundations (W500, W600, W610) could be further exposed.

Trench H

In the center of Trench H, a floor segment (L700) with a stone-lined pit (its bottom was not reached) was delineated on the northeast by a straight wall segment (W701). The floor is similar in composition to that exposed in Sq G (L601) and most likely dates from the same horizon (i.e., Stratum 2).

Square F

Stratum 2. Short segments of two poorly preserved, northeast–southwest wall foundations (W500, W501) protruded respectively from the northern and southern balks of the probe. Notably, their orientation conforms with W100 in Area A, Sq A. The

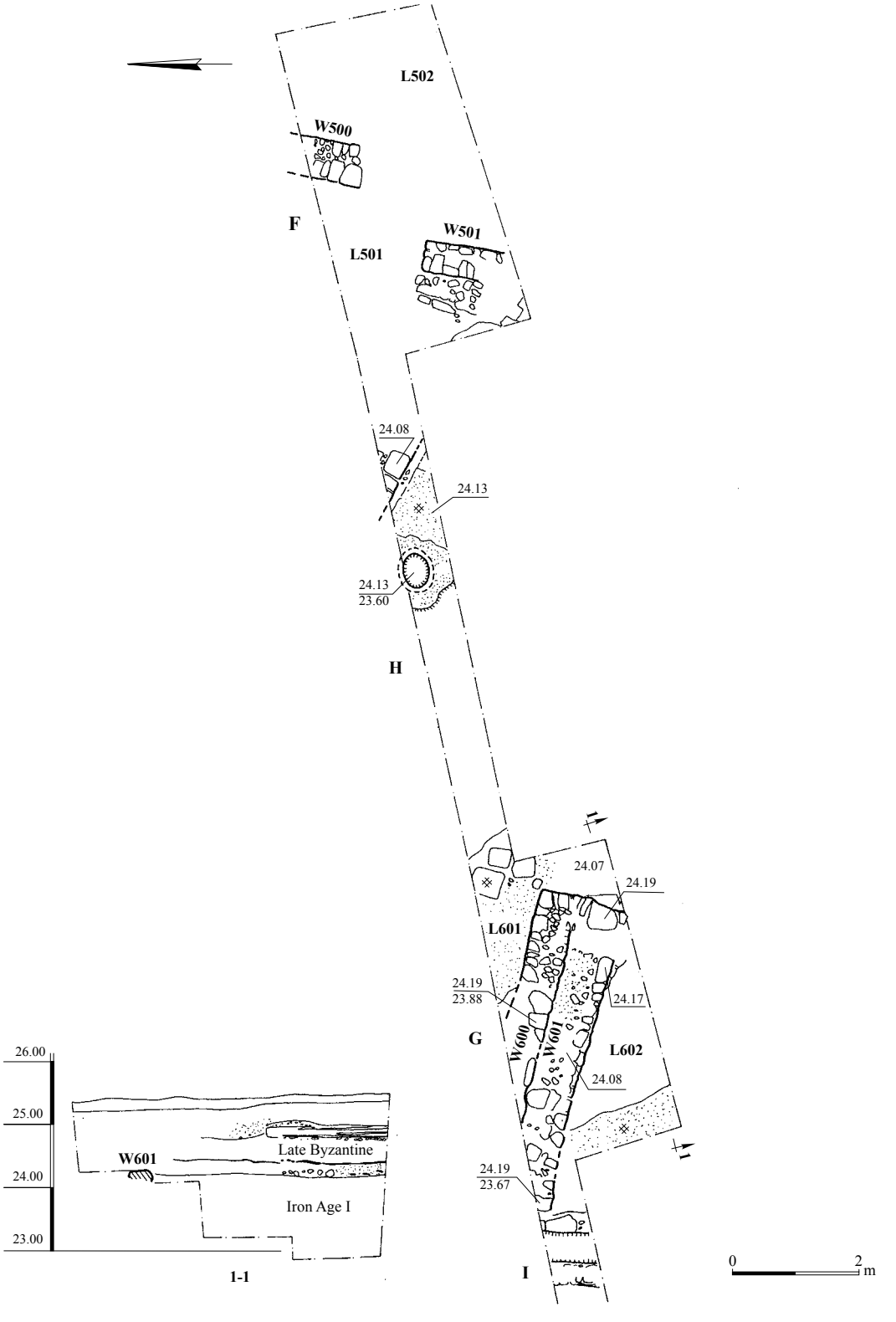

Plan 3. Area A, Sq C, plan and section.

Fig. 15. Area B, Sq G. Stratum 2 Walls 600 (left) and 601 (right).

Fig. 16. Area B, Sq G. Foundation course of W601 of Stratum 2, looking east.

pottery collected from the associated fills (L501, L502) indicate a late Byzantine date (Fig. 21:6).

Square G

Stratum 2. Walls 600 and 601 were associated with a clearly defined, hard-packed floor (L601; Figs. 15, 16), similar to a floor segment (L700) exposed in Trench H. Floor 601 was dated to the Byzantine period (late fifth–seventh centuries CE) based on associated Late Roman wares (see Fig. 21:5, 6) and a half *follis* issued during the reign of Justinus II (565–575 CE) that was found above it (B7002). The surviving remains of W600 and W601 consist of three courses of *kurkar* stones, two rows of stones each with smaller stones in the crevices.

Stratum 3. Beneath Stratum 2 was a thick, featureless fill of soft, loose, light brown soil (L602, L603) containing only Iron Age I–II sherds (Fig. 18). Lack of time prevented us from reaching the base of this stratum.

POTTERY

Apart from the structural remains, most of the finds from the excavation comprise pottery derived either from secondary deposits (EB I and Iron Age I–II pottery), or from fills and floors associated with structural remains (late Byzantine and Early Islamic pottery). A number of isolated sherds from the medieval to late Ottoman periods (such as the ubiquitous Gaza Ware), appear to have been eroded from the nearby Crusaders castle and the Arab village destroyed in 1948, and clearly do not belong to the ceramic assemblage found in the excavations.

Late Early Bronze Age I (Fig. 17)

Occasional late EB I (EB IB) sherds were encountered primarily in the deeper layers probed in Area A, Sqs A and E. This assemblage consists of the following items: deep bowls, red-slipped inside and/or out (Fig. 17:1, 2); the lower part of a cup, red-slipped inside and out (Fig. 17:3); holemouth storage jars (Fig. 17:4, 5) and cooking pots (Fig. 17:6); pithoi, either without any surface treatment (Fig. 17:7, 9) or covered on the exterior with a lime wash (Fig. 17:8); body sherds with finger-impressed bands of clay applied to pithoi (Fig. 17:10) and smaller vessels (Fig. 17:11); ledge handles (Fig. 17:12, 13), which are common in the assemblage; and a flat base of a jar, red-slipped on the exterior (Fig. 17:14).

Fig. 17 ▸

No.	Vessel	Locus	Basket	Description
1	Deep bowl	405	5043	Red-slipped on int. and ext.
2	Deep bowl	406	5042	Red-slipped on int. and ext., on rim int. and ext.
3	Cup	107	2024	Red-slipped on int. and ext.
4	Holemouth storage jar	402	5027	
5	Holemouth storage jar	411	5053/2	Black-painted on ext.
6	Holemouth cooking pot	411	5053/1	Traces of soot on ext.
7	Pithos	411	5055	
8	Pithos	406	5031/1	
9	Pithos	406	5031/2	
10	Pithos	405	5041	Application of finger-impressed band
11	Jar	411	5054/1	Application of finger-impressed band
12	Small ledge handle	410	5051	
13	Ledge handle	411	5054/2	
14	Jar	102	2007	

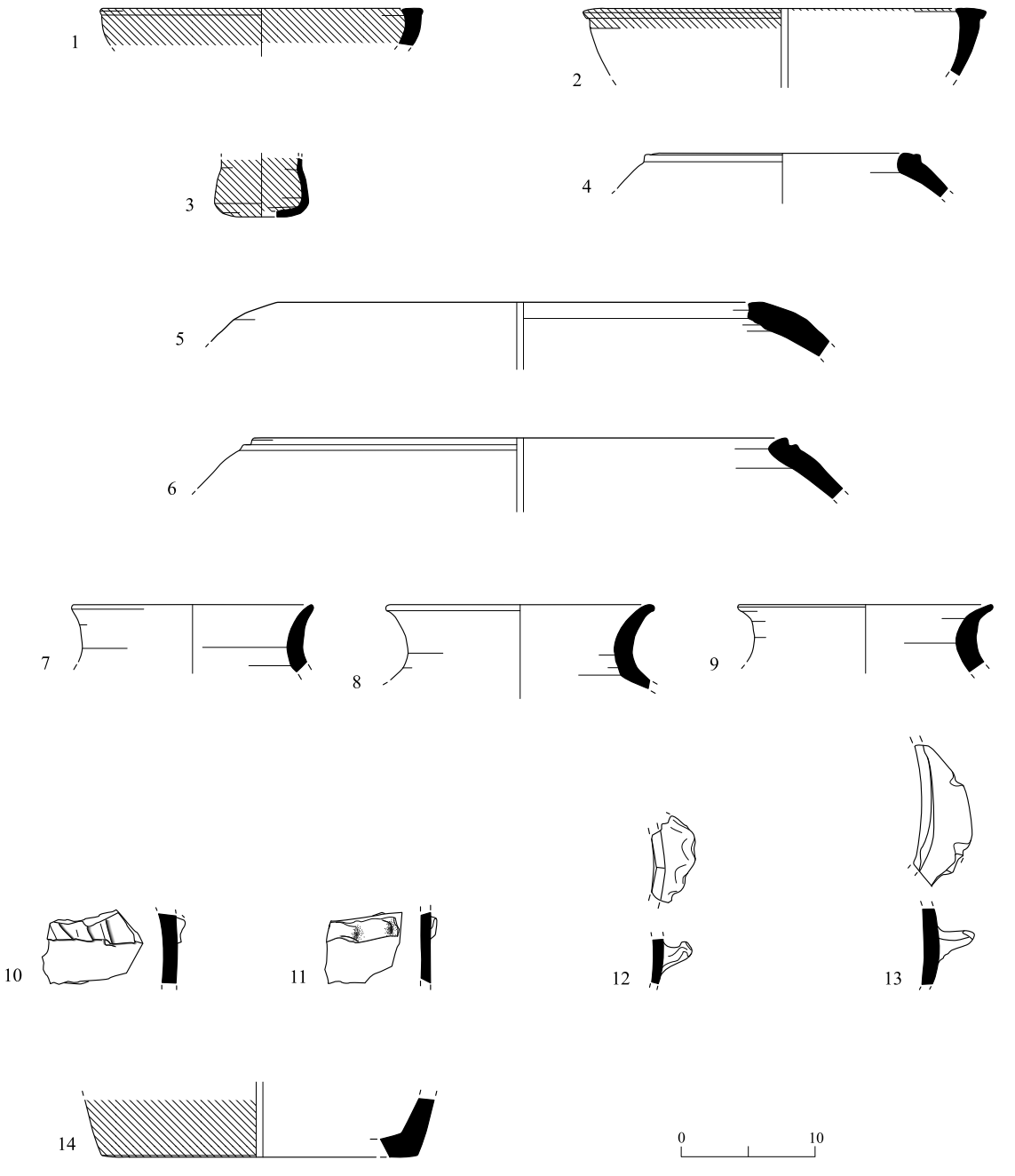

Fig. 17. Selection of late EB I pottery from Area A, Sqs A and E.

These pottery types are typical of late EB I assemblages (see, e.g., Braun, in press: Figs. 12, 13), and suggest the presence of a settlement, rather than burials, at the site. Late EB I settlement remains were encountered at the bottom of a small probe made on the tell of Azor in 1966 (Gophna and Busheri 1967; Gophna 1974), less than 50 m southwest of the present site (Golani and van den Brink 1999: Plan 1:12, Appendix 1: No. 12). In the past, excavations at Azor also uncovered a score of *kurkar*-hewn tombs dating to the same period that probably served the late EB I population dwelling at the site (Golani and van den Brink 1999:41–43, Appendix I: e.g., Nos. 15–17).

Iron Age I–II (Fig. 18)

In a limited probe conducted in Area B (Sq G), large amounts of pottery sherds dating to Iron I–II were unearthed in an otherwise featureless fill (Stratum 3; L602, L603) situated directly beneath a late Byzantine layer (Stratum 2). This small assemblage includes the following items: bowls with reddish-purple slip, hand- or wheel-burnished (Fig. 18:1–5); cooking pots (Fig. 18:6, 7); kraters (Fig. 18:8, 9); and a black-on-red juglet-amphoriskos (Fig. 18:11; see Amiran 1969: Photograph 295). Area A also yielded a few Iron Age sherds, including a fragment of a storage jar (Fig. 18:10), and two fragments that possibly belong to cult stands (Fig. 19, see below).

Most of the Iron I–II assemblage revealed in the present excavations can be paralleled at other sites, e.g., Lakhish Stratum V and Tell Qasile Stratum VII (see, e.g., Amiran 1969:191). Iron Age materials uncovered previously at Azor were primarily associated with Iron I contexts,[4] such as a large cemetery less than 200 m south of the present site, and settlement remains (including a large, mud-brick rampart) less than 50 m to the southwest (Golani and van den Brink 1999: Appendix I: Nos. 6, 12, with further references therein).

Two Fragments of Ceramic Cult Stands
Raz Kletter

Two small ceramic fragments found in Area A, Sq A (L106, B2017; L107, B2024) are made of reddish brown clay with small white grits, well-worn and encrusted (Fig. 19). Both fragments are flat and rather thin, with plastic, handmade modeling on one side. The fragment in Fig. 19:1 (L107) comprises the remains of a rounded pillar or leg(?), broken and incomplete. There is also a curious, rounded damaged area above the 'leg', which perhaps indicates a broken part. The fragment in Fig. 19:2 (L106) is folded over to create a leg(?), which is broken off at the bottom. Signs of breakage indicate the position of another applied element (leg?) alongside this leg, suggesting that the fragment perhaps depicted a standing figure.

[4] The authors would like to thank Eli Yannai for sharing his expertise regarding the Iron Age assemblage.

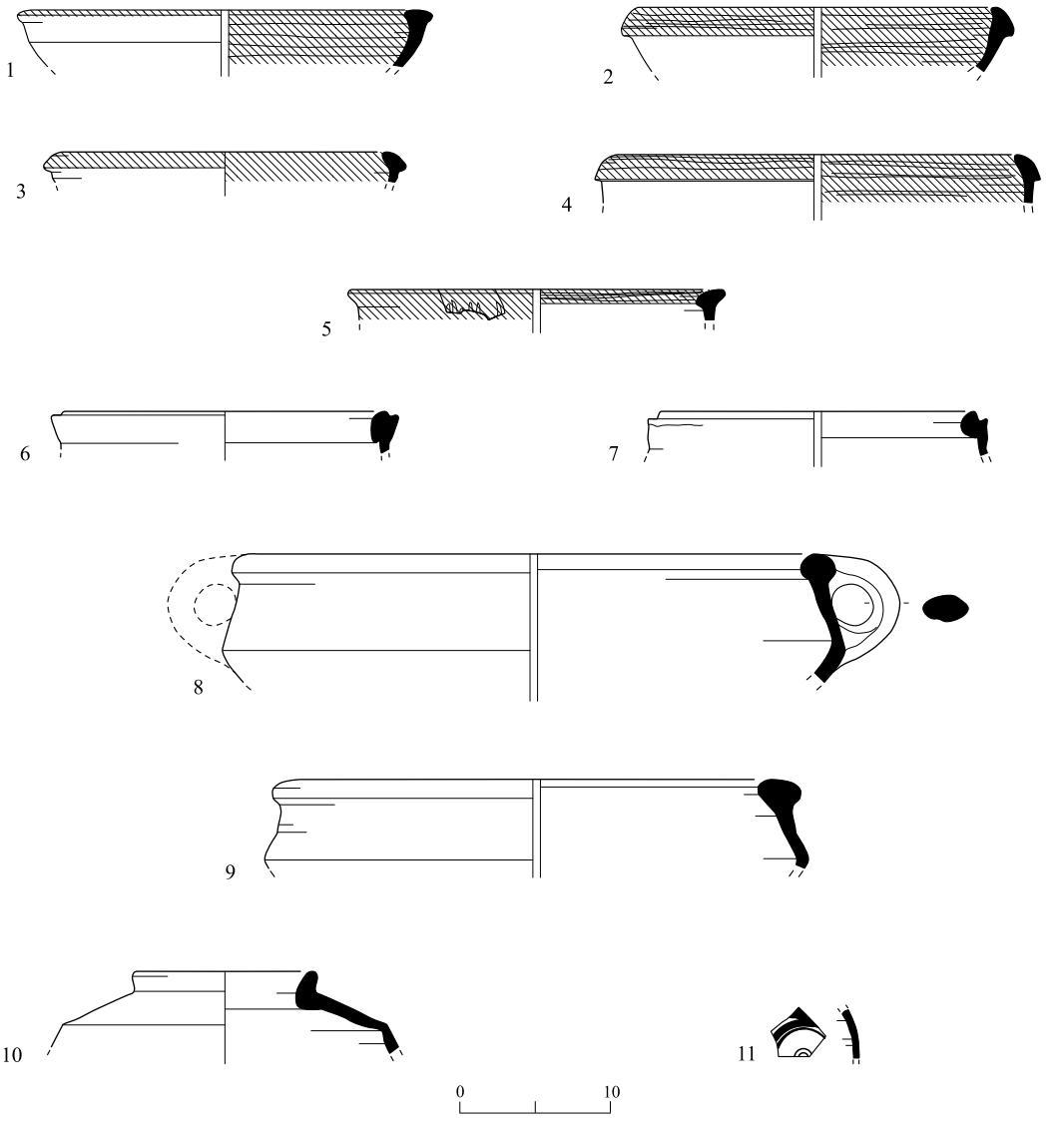

Fig. 18. Selection of Iron Age I–II pottery from Area B, Sq G, Stratum 3 (except No. 10, from Area A, Sq A).

No.	Vessels	Locus	Basket	Description
1	Bowl	602	7005	Reddish purple slip, burnished
2	Bowl	602	7007/1	Reddish purple slip, burnished
3	Bowl	602	7008/1	Reddish purple slip, burnished
4	Bowl	602	7008/2	Reddish purple slip, burnished
5	Bowl	602	7008/3	Reddish purple slip, burnished
6	Cooking pot	602	7007/2	
7	Cooking pot	603	7009/1	
8	Krater	603	7009/2	
9	Krater	603	7009/3	
10	Storage jar	106	2018	
11	Juglet-amphoriskos	603	7009/4	Black-on-red decoration

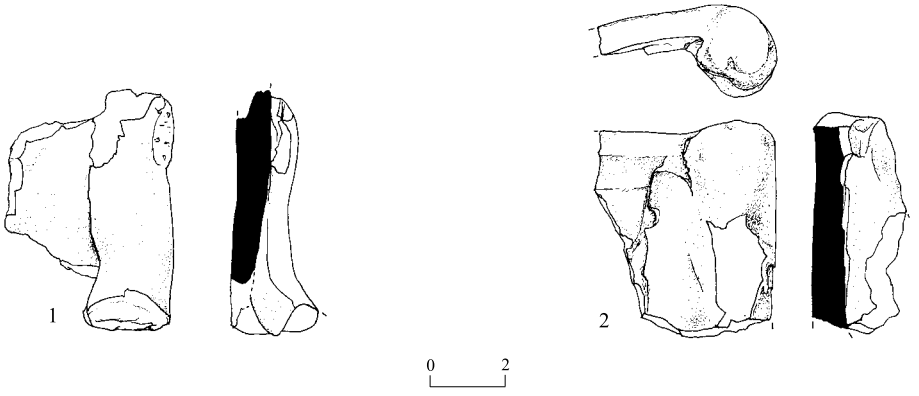

Fig. 19. Fragments of cult stands.

Both of these fragments can be identified as parts of shrine models or cult stands. Shrine models (*naoi*) have similar flat surfaces or facades, often with attached figures. They are known from Late Bronze Age and especially Iron Age sites in the Levant (Bretschneider 1991; Kletter 2015; Schroer 2017). Cult stands have varied forms, including rectangular, round and oval, with standing animal and human figures attached at the corners and in openings at the front. Some stands also have animals on the sides, integrated into the structure. Cult stands have been found at various sites in the Southern Levant, such as Ta'anakh, Megiddo, Ashdod, Pella and Yavne, dated to the early Iron Age (Beck 1994; Nahshoni and Ziffer 2009; Kletter, Ziffer and Zwickel 2010; Ziffer 2011; Kletter 2012; Katz 2016; Muller 2016).

Another type of figurative Iron Age object is the 'facade,' which is a shallow, almost two-dimensional pottery plaque, an example of which was found in the Stratum X temple at Tell Qasile (Mazar 1980:82–84, Fig. 20; 1985). Such facades depict standing figures, for example two women or a woman and a child. However, the figures are molded on the surface and are not located at corners. It seems that the Azor fragments belong to three-dimensional, rectangular cult stands rather than facades (it could not be determined if they belonged to the same vessel).

While the present fragments are too small and worn for a more precise identification, they can be dated to the early Iron Age and are indicative of cultic activities at Azor in that period.

Roman Period (Fig. 20)

The small amount of Roman ceramics uncovered in the excavations derives mainly from construction fills of the late Byzantine–Early Islamic hypocaust (L106, L107, L405, L406). Although this assemblage could not be associated with any architecture of the Roman period, the parallels cited below suggest an occupation at Azor that is datable to the first–fourth centuries CE.

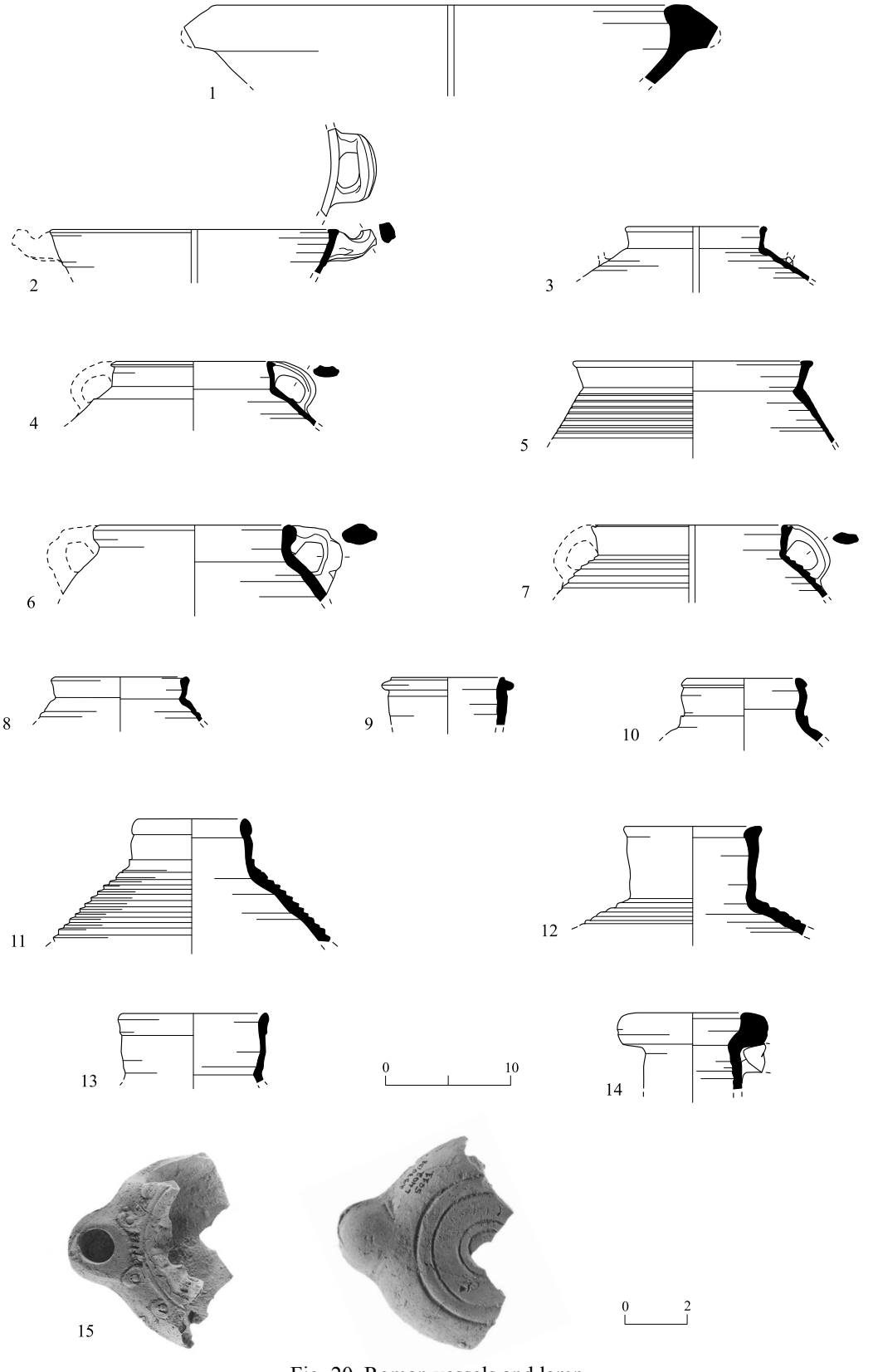

Fig. 20. Roman vessels and lamp.

◂ **Fig. 20**

No.	Vessel	Locus	Basket	Description
1	Mortarium	402	5005	Light brown clay; buff slip; traces of mortar
2	Casserole	403	5025	Reddish brown clay
3	Cooking pot	405	5040	Brown clay
4	Cooking pot	406	5042	Reddish brown clay
5	Cooking pot	405	5040	Brick-red clay
6	Cooking pot	100	2020	Reddish clay with gray core
7	Cooking pot	405	5040	Brown clay
8	Cooking pot	106	2015	Brown clay
9	Jar	107	2023	Brown clay with yellowish core and large white inclusions
10	Jar	106	2022	Brown clay
11	Jar	106	2022	Brick-red clay; buff slip on ext.
12	Jar	405	5040	Light brown clay fired buff on surfaces
13	Jar	405	5038	Reddish yellow clay; worn buff slip on ext.
14	Amphora	401	5017	Yellow-buff sandy clay
15	Lamp	402	5011	Reddish clay fired pink to buff on surfaces; schematic volute decoration; soot in the wick hole

The mortarium in Fig. 20:1 is similar in form to that classified by Blakely, Brinkmann and Vitaliano (1992:205, Fig. 5:6, Class 6). The open casserole in Fig. 20:2 is of a type that becomes extremely popular in the Byzantine and Early Islamic periods. The Roman example illustrated here, however, may be distinguished by its thin metallic ware. It is paralleled by examples at Caesarea and Dor from the second–third centuries CE (Bar-Nathan and Adato 1986:164, Fig. 2:15; Guz-Zilberstein 1995:403, Fig. 6.49:9). Based on parallels, the globular cooking pots in Fig. 20:3–5 are dated to the second–fourth centuries CE (Magness 1993:216–217, Forms 1A–1B; Guz-Zilberstein 1995:403, Fig. 6.49:14–17), and the sandy brittle ware of those in Fig. 20:7 and 8 suggests a slightly later date in the third–fourth centuries. A third–fourth-century date may also be suggested for the globular cooking pot in Fig. 20:6 (Bar-Nathan and Adato 1986:167, Fig. 3:16; Magness 1993:217, Form 2). The flanged-rim jar in Fig 20:9 is dated to the first–second centuries CE (Bar-Nathan 1981: Pl. 3:5; Herschkovitz 1987:314, Fig. 1:3), and the short-necked jars with a thickened rim (Fig. 20:10, 11), to the second–third centuries CE (Bar-Nathan and Adato 1986:163, Fig. 2:7–9). A second- to fourth-century CE date may be suggested for the jar in Fig. 20:12 (Bar-Nathan and Adato 1986:163, Fig. 2:5), and Fig. 20:13, with a high neck and an externally folded rim, may date to the third–fourth centuries CE (similar to Bar-Nathan and Adato 1986:163, Fig. 2:1).

The imported amphora in Fig. 20:14, with a beaded rim, is a type that was produced in both North Africa and Gaul. It was especially common in the western Mediterranean basin during the first–third centuries (Bar-Nathan and Adato 1986:161–162, Fig. 1:6, 11, Ill. 150).

The round lamp with a decorative discus and schematic volutes in Fig. 20:15 was a common type in Syria-Palestine during the first–fourth centuries CE, and was even produced locally, as is apparently the case for the example from Azor (Rosenthal and Sivan 1978:85–90).

Late Byzantine–Early Islamic Periods (Figs. 21–28)

The main bulk of the pottery from the excavation dates to the late Byzantine period (fifth–mid-seventh centuries CE) and the Early Islamic period: Umayyad (mid-seventh–mid-eighth centuries CE), Abbasid (mid-eighth–tenth centuries CE), and possibly even later, as suggested by a surface find of a Fatimid-period Fayyumi ware bowl (Fig. 22:4). Nevertheless, it cannot be determined conclusively if these ceramics are to be associated with the bathhouse unearthed in Area A, the main feature uncovered in these excavations.

As very few distinct loci could be associated with the late Byzantine period, it was decided to present the pottery typologically without separating the late Byzantine material from that of the Early Islamic period. This method of presentation also reflects the fact that many of the late Byzantine types, such as those of Fine Byzantine Ware, the cooking pots and some of the lamps, continued until at least the early eighth century CE. During the study of the material, it became apparent that some of the late Byzantine ceramics, particularly the jars (Fig. 27), are clearly residual, as they are heavily eroded and frequently covered with remains of mortar, suggesting that they were incorporated into the cement used in the construction of the hypocaust.

The only almost-clean late Byzantine context, dated by Late Roman wares (Fig. 21:2–6) to the late fifth–seventh centuries CE, was detected in Area B, Stratum 2, in Sqs F and G. Unfortunately, these areas are not connected to any substantial architectural features, and the amount of pottery was insignificant.

The most common ceramic types found in almost every locus of the excavations were Early Islamic metallic wares (Fig. 23), typical of the seventh–eighth centuries CE, and white-buff wares (Fig. 24), characteristic of the mid-eighth–tenth centuries CE. The metallic wares display a great similarity to those excavated in the Umayyad strata at Jerash (Gawlikowski 1986; Schaefer 1986) and Pella (McNicoll, Smith and Hennessy 1982; Walmsley 1988; Smith and Day 1989; Watson 1992), while the Abbasid white-buff, as well as glazed wares (Fig. 22), have their closest parallels in many still-unpublished excavations at nearby Ramla (Kapitaikin, forthcoming; Anna de Vincenz, pers. comm.). Other types, in particular the 'Caesarea Amphora 1B' (Fig. 27:2–8; see Riley 1975:26–27) and the 'Gaza jar' (Fig. 27:17; see Majcherek 1995:169, Form 3), are typical of the coastal area.

The Early Islamic ceramic assemblage from Azor is an interesting and important contribution to our knowledge of the pottery of this period in the area surrounding Azor. The existence of an Early Islamic settlement at Azor, and its close connection to nearby Ramla, is attested in the historical sources. For example, we are told that the father of Abū Muḥammad al-Ḥasan al-Yazûrī, the famous wazīr (1050–1058) of the Fatimid caliph al-

Fig. 21 ▸

No.	Vessel	Locus	Basket	Description
1	ARS bowl	601	7001	Reddish clay; red slip; worn
2	ARS bowl	601	7001	Reddish clay burnished on int.
3	LRC bowl	401	5017	Reddish clay; red slip
4	LRC bowl	500	6000	Reddish orange clay; burnished
5	LRC bowl	600	7000	Reddish clay; red slip
6	LRC bowl	601	7001	Reddish clay; reddish slip and rouletting on ext. rim
7	CRS bowl	404	5032	Reddish clay; reddish slip
8	CRS bowl or local imitation	410	2027	Reddish clay with gray core; reddish slip
9	CRS bowl	402	5008	Reddish clay; reddish burnished slip; rouletting on ext.
10	FBW bowl	500	6000	Reddish orange clay with gray core; pare-burnished on ext.
11	FBW bowl	400	5002	Same as No. 10
12	FBW bowl/cup	403	5028	Clay same as No. 10; incised wavy line on ext.
13	FBW bowl/cup	600	7000	Reddish, well-fired clay; dull white slip on ext.
14	FBW bowl	103	2003	Brownish clay with gray core; knife-paring on ext.; traces of vegetal decoration painted in black and red on a white slip
15	FBW juglet	404	5032	Reddish and gray 'sandwich' clay; decorated with incised gashes on ext.
16	FBW juglet	502	6004	Reddish clay with a gray core and small white inclusions

Mustansir, was a farmer from Azor, who later moved to Ramla where he became a *qadi* (Gil 1992: No. 598).

Late Roman Red Ware (Fig. 21:1–9).— The bowls in Fig. 21:1, 2 are African Red Slip Ware bowls; Fig. 21:1 may be Hayes' ARS Form 104C or 105, dated to 550–660 CE or later (Hayes 1972:160–169, Figs. 30–32). The Late Roman C Ware (LRC) bowls (Fig. 21:3–6) are Hayes' LRC Forms 3D–H, dated to the late fifth–mid-sixth centuries CE (Hayes 1972:329–338, Figs. 68, 69); Fig. 21:7–9 are Cypriot Red Slip Ware (CRS) bowls, Fig. 21:8 may be Hayes' CRS Form 11, dated to c. 550–650 CE (Hayes 1972:383, Fig. 83).

Fine Byzantine Ware (Fig. 21:10–16).— Fine Byzantine Ware (FBW) appeared in the mid-sixth century CE and continued to be produced with minor changes until the tenth century CE (Magness 1993:166–171). The bowl with the wavy incised line (Fig. 21:12) and the juglets (Fig. 21:15, 16) should be dated to the mid-sixth–mid-eighth centuries CE (Magness 1993:193–198, Form 1A; 236–242, Forms 1C, 2A). The shallow bowls (Fig. 21:10, 11) are dated to the mid-seventh–tenth centuries CE (Magness 1993:198–201, Forms 2B, 2C). The thin ware and white slip of Fig. 21:13, and the black-and-red decoration painted on white slip of Fig. 21:14, both point to a date in the eighth–ninth centuries CE (Baramki 1944:68–69, Ware 10, Fig. 7:2, 3, 15, 17, Pl. 16:27, 28; Walmsley 1988: Ill.9:16; Whitcomb 1988: Fig. 1, Period 1:E; Magness 1993:193–198, Form 1E:3).

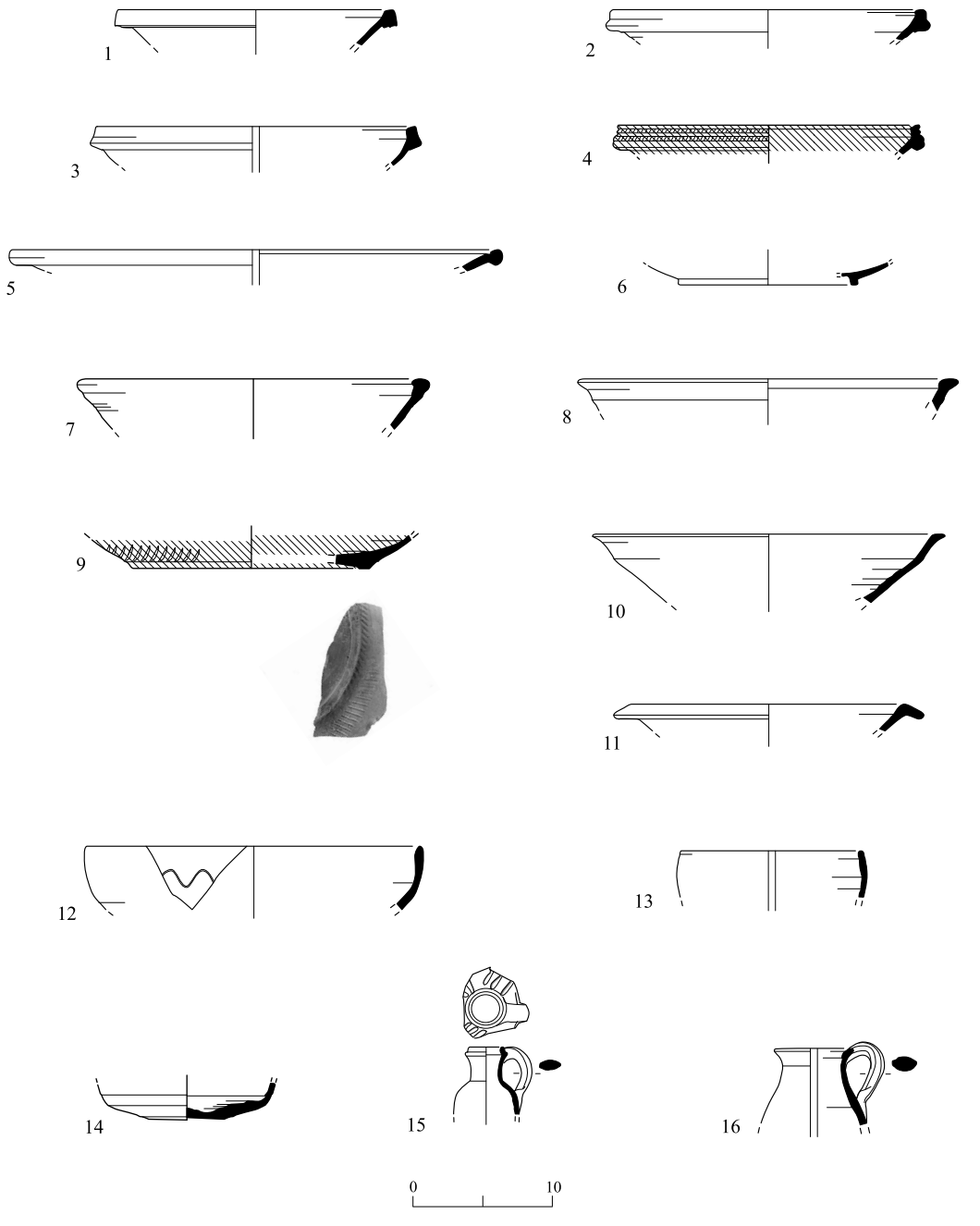

Fig. 21. Late Byzantine and Early Islamic fine wares.

Early Islamic Glazed Ware (Fig. 22).— Sherds of Early Islamic glazed ware were quite prevalent among the finds. As at other sites, open shapes (Fig. 22:1–9) were far more frequent than closed vessels (Fig. 22:10, 11). All the glazed ware can be dated to the second half of the eighth–tenth centuries CE, with the exception of Fig. 22:4, a surface find that is dated to the eleventh century CE.

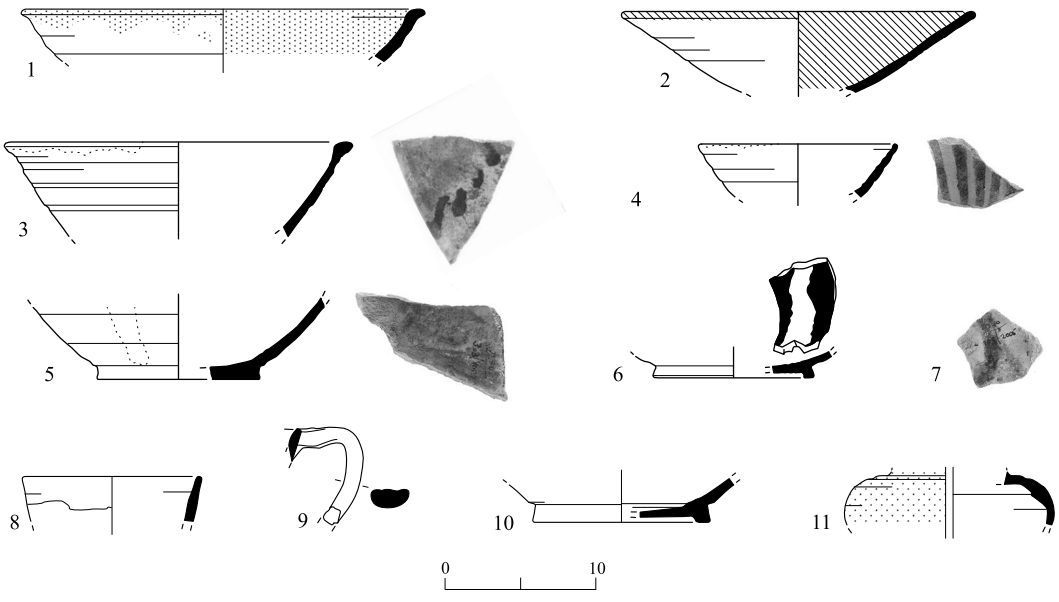

Fig. 22. Early Islamic glazed ware.

No.	Vessel	Locus	Basket	Description
1	Bowl	300	4000	Pinkish yellow clay with large pink and white inclusions; white slip on int. and ext.; vitrified white glaze with occasional drops of greenish color on ext., dripping over ext. rim
2	Bowl	104	2012	Greenish white clay; on int., a glazed design of green stripes and dark brown daubs on a whitish background
3	Bowl	403	5010	Pinkish yellow clay; greenish white slip on int. and ext.; on int., a glazed design of green stripes and dark-brown daubs on a whitish background
4	Bowl	Surface		Yellow and manganese-brown glaze; surface of reddish brown clay with white and black inclusions; whitish slip on int. and ext.; white-glazed on ext.; on int., alternating stripes
5	Bowl	303	4022	Coarse, whitish green clay; on int., splashed design in dark green and dark brown glazes on a greenish white background; on ext., splashes of green glaze on a whitish green background
6	Bowl	400	5000	Pinkish yellow clay; whitish slip on ext. and int.; splashed green and yellow glaze on int.; white glaze on ext.
7	Bowl	103	2005	Same clay as No. 6.; whitish slip on the ext. and int.; splashes of dark green glaze on a whitish green background on int.; drops of green glaze on ext.
8	Goblet?	401	5014	Same clay as No. 6.; whitish slip on ext. and int.; greenish white slip on int., dripping over ext. of rim; int. of rim decorated with splotches of green glaze
9	Chamber pot?	102	2000	Pinkish clay; whitish slip on ext. and int.; on int., whitish glaze with occasional splashes of green
10	Closed vessel	402	5005	Greenish white clay; whitish slip on int. and ext.; on int., vitrified white glaze with occasional splashes of green; white glaze on ext.
11	Closed vessel	303	4010	Whitish yellow clay; whitish slip on int. and ext.; vitrified turquoise alkaline glaze on ext.; remains of whitish(?) glaze on int.

The bowls in Fig. 22:1, 5, 6 are decorated with polychrome splashed glaze imitating imported Chinese ceramics (Avissar 1996a:78–81, Fig. XIII.6, Type 6; Tal and Taxel 2008:128–129). The splashed greenish yellow glaze of Fig. 22:6 is an especially close imitation of the Chinese T'ang wares. Lead-glazed bowls (Fig. 22:2, 3) decorated with green stripes and dark brown splotches are extremely prevalent at sites in Syria-Palestine of the eighth–ninth centuries CE (Avissar 1996a:77, Fig. XIII.2, Type 2). They were evidently produced near Ramla (Tal and Taxel 2008:128–129; Kapitaikin, forthcoming).

The bowl in Fig. 22:4, decorated with stripes of yellow and manganese-brown glaze, is an example of Fayyumi Ware and was probably imported from Egypt, as is also attested by its reddish brown clay (Avissar 1996a:82, Type 10). A date of c. 1100 CE was suggested for a similar bowl found in Fustat (Scanlon 1993:303, Fig. 5-b, Pls. LX; LXIX:10). The fragment of a bowl with green decoration beneath a clear whitish green glaze (Fig. 22:7) resembles a find published by Avissar (1996a:85, Fig. XIII.13, Photograph XIII.19, Type 13). The sherd in Fig. 22:8, decorated with green splotches, may belong to a goblet. The rim and handle in Fig. 22:9 may belong to a chamber pot (Kapitaikin, forthcoming: Fig. 7:8; Color Pl. 1:11; see, however, Stacey 2004:96, Fig. 5.9:7, with a splayed rim similar to our vessel, but not identified as a chamber pot). The fragment of a closed vessel made of soft paste (Fig. 22:11) is covered with alkaline turquoise glaze. Small alkaline-glazed containers are reported from Early Islamic sites (Avissar 1996a:164, Fig. XII.144, Type 18).

Early Islamic Metallic Ware (Fig. 23).— The deep bowls in Fig. 23:1–6 are characterized by a ledge rim and incised decoration. While by no means widespread, this type of bowl in metallic ware is reported in Abbasid assemblages; however, it is more frequent in white-buff than the metallic ware (Baramki 1944: Fig. 10:11–13; Walmsley 1988: Ill. 9:13; Whitcomb 1988: Fig. 1, Period 2:E; Avissar 1996a:120, Fig. XIII.69, Type 6; Tal and Taxel 2008: Fig. 6.81:2–9). The bowl decorated in Kerbschnitt technique (Fig. 23:7) is identical in its ware and form to those in Fig. 23:1–6. This type of decoration first appeared in Umayyad times, but continued into the Abbasid period (Avissar 1996a:122, Fig. XIII.74; Tal and Taxel 2008: Fig. 6.82:1–5).

The vessels in Fig. 23:8–28 are made of metallic terracotta ware of a reddish to orange-brown fabric, fired gray or grayish red on the surface, and frequently adorned with white-painted decoration. This ware, although possibly making its first appearance as early as the sixth century, was especially common in the seventh–eighth centuries CE. It appears in large quantities in the Umayyad kiln sites at Jarash (Gawlikowski 1986: Pls. X, XI) and, according to Avissar (1996a:120, 163–164), it continued into the Abbasid period as well (see also Walmsley 1988:152, 156; Watson 1992:236–237, Ware C, Fig. 5:36, 39).

These metallic, terracotta-ware vessels include shallow bowls or lids (Fig. 23:8, 9), dated by Tal and Taxel to the Early Islamic period (2008:125–126, Fig. 6.79:1–7), and deep bowls (Fig. 23:10–13) that are paralleled in an Umayyad stratum of the first half of the eighth century CE at Pella, but may have continued into the early Abbasid period (McNicoll, Smith

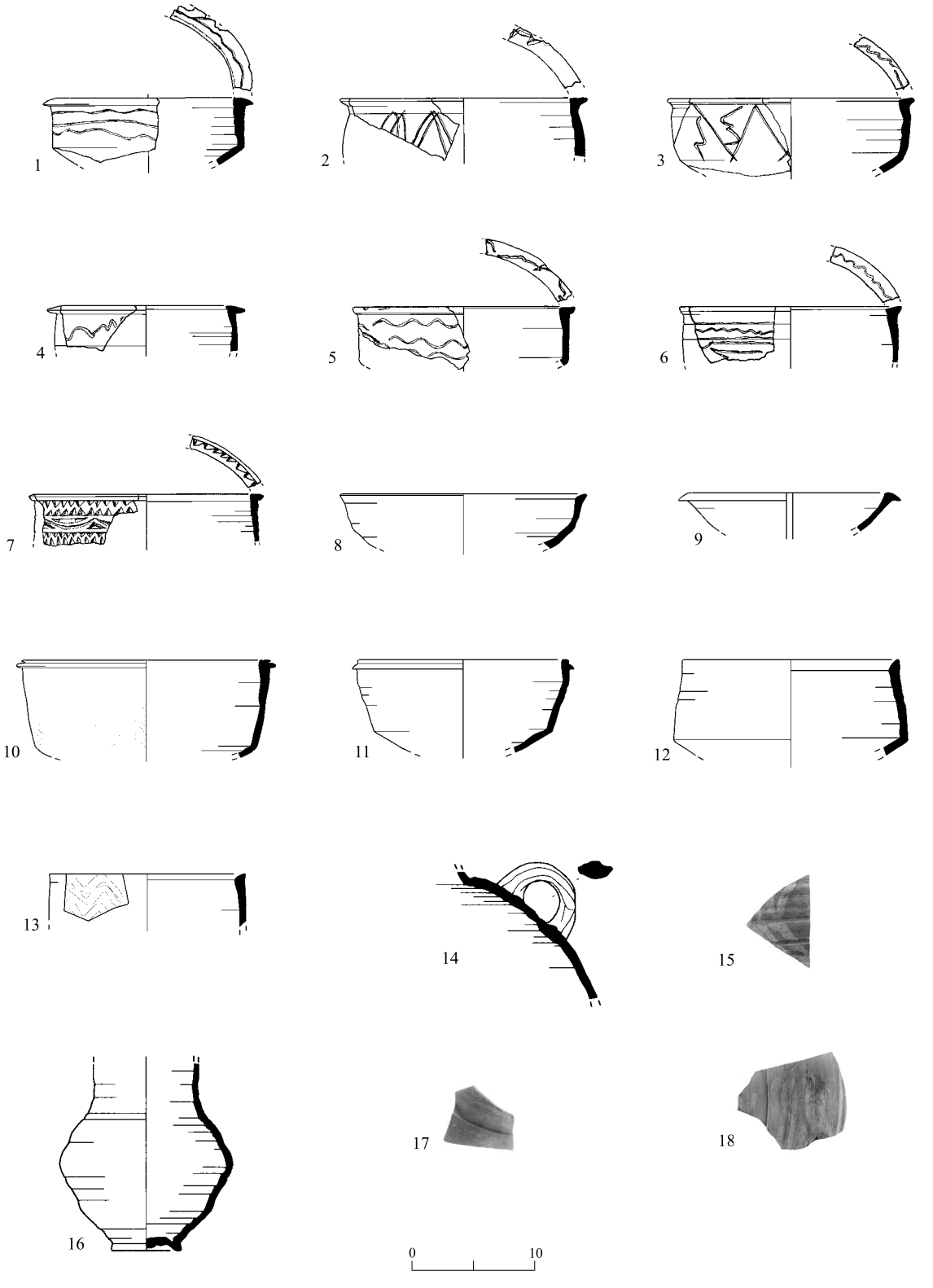

Fig. 23. Early Islamic metallic wares.

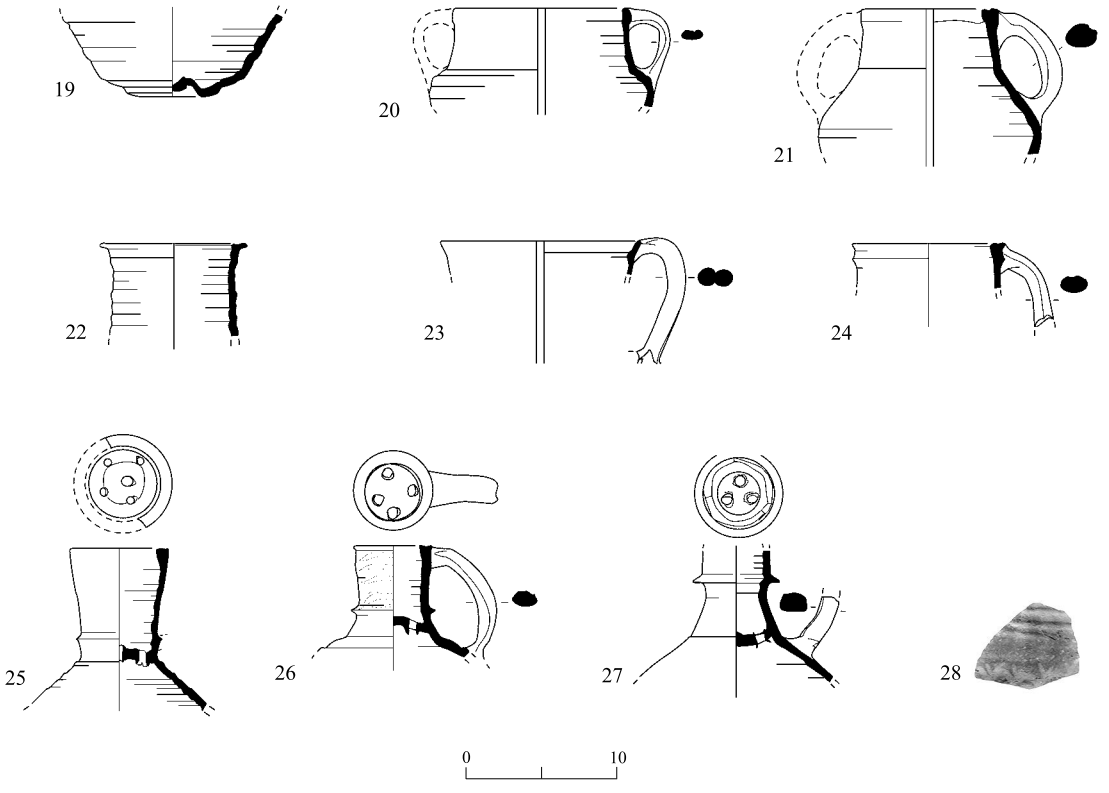

Fig. 23. (cont.)

No.	Vessel	Locus	Basket	Description
1	Bowl	104	2011	Reddish to orange clay fired reddish gray on ext.; incised decoration on ext.
2	Bowl	402	5005	Same clay as No. 1(?); incised decoration on ext.
3	Bowl	102	2007	Same clay as No. 1(?); incised decoration on ext.
4	Bowl	402	5007	Same clay as No. 1(?); incised decoration on ext.
5	Bowl	102	2000	Same clay as No. 1(?); incised decoration on ext.
6	Bowl	400	5004	Same clay as No. 1(?); incised decoration on ext.
7	Bowl	304	4017	Same clay as No. 1(?); cut and incised (Kerbschnitt) decoration on ext.
8	Lid/bowl?	304	4015	Reddish clay with white and red inclusions fired gray on ext.
9	Bowl	304	4014	Reddish clay
10	Bowl	204	3015	Reddish clay with white inclusions fired reddish gray on surfaces; decorated with white wavy lines on ext.
11	Bowl	203	3011	Reddish clay with thick gray core
12	Bowl	400	5004	Reddish and buff 'sandwich' clay with white inclusions
13	Bowl	102	2010	Reddish clay with a buff core and white inclusions fired gray on ext.; white wavy-line decoration on ext.
14	Jar	300	4008	Reddish clay with white inclusions fired brownish gray on ext.

◂ **Fig. 23.** (cont.)

No.	Vessel	Locus	Basket	Description
15	Jar	206	3021	Reddish clay with gray core fired gray on ext.; geometric decoration in white paint on ext.
16	Amphoriskos	300	4013	Reddish clay with a gray core and white inclusions
17	Amphoriskos?	205	3017	Reddish clay; white wavy-line decoration on ext.
18	Amphoriskos?	402	5006	Reddish clay with gray core fired buff on ext.; white wavy-line decoration on ext.
19	Closed vessel	304	4015	Reddish clay with a buff core and large white inclusions fired buff on ext.
20	Amhoriskos	204	3013	Reddish clay with white inclusions and a gray core fired buff on ext.
21	Amphoriskos	303	4022	Reddish clay fired grayish buff on ext.
22	Jug	204	3014	Grayish to buff clay
23	Jug	300	4009	Brown clay
24	Jug	103	2005	Reddish clay with large white inclusions
25	Strainer jug	401	5014	Buff clay with large white inclusions fired gray to reddish on ext.
26	Strainer jug	303	4022	Buff clay with thick gray core fired gray on ext.; decorated with white wavy lines on ext.
27	Strainer jug	204	3014	Reddish and gray 'sandwich' clay with white inclusions fired gray on ext.
28	Jug	303	4022	Reddish and buff 'sandwich' clay with white inclusions fired reddish and grayish on ext.; decorated with white paint on ext.

and Hennessy 1982: Pl. 161:3; Smith and Day 1989: Pl. 59:11; Avissar 1996a:120, Fig. XIII.70, Type 7).

A shoulder fragment (Fig. 23:14) and another sherd (Fig. 23:15) are of a gray Beisān jar. Figure 23:15 is decorated with white-painted lines. This is a type that made its first appearance sometime during the fifth century CE, and was popular until the eighth century CE (Baramki 1944: Fig. 3:1–3; Landgraf 1980:67–80; Walmsley 1988: Ill.7:7; Whitcomb 1988: Fig. 1, Period 1:A).

The amphoriskoi (Fig. 23:16–18, 20, 21) and strainer jugs (Fig. 23:25–27) are very prominent in Umayyad and early Abbasid strata at Jarash and Pella (McNicoll, Smith and Hennessy 1982: Pl. 169:3, 4, 6, 7; Gawlikowski 1986: Pls. X; XIII:A; Schaefer 1986: Fig. 12:1–5; Walmsley 1988: Ills. 7:2–4; 9:15; 10:4, 5, 7; Smith and Day 1989: Pl. 61:1–3, 9, 10; Sodini and Villeneuve 1992: Fig. 5:1–5). The omphalos bases in Fig. 23:16, 19 are typical of the Umayyad and the early Abbasid periods. The jug with a double handle (Fig. 23:23) is identical in shape to examples of white-buff ware (see, e.g., Fig. 24:6). The jug in Fig. 23:24 is paralleled by finds from the Umayyad strata at Jarash (Gawlikowski 1986: Pl. XI,

Fig. 24 ▸

No.	Vessel	Locus	Basket	Description
1	Bowl/lid?	104	2012	Whitish green clay
2	Bowl	404	5002	Reddish yellow clay; whitish clay on ext. and int.
3	Lid	102	2000	Whitish green coarse clay
4	Flower pot?	400	5000	Pinkish white clay with pink inclusions; whitish slip on ext. and int.
5	Jug	304	4017	Greenish white clay; grooved neck decoration
6	Jug	303	4022	Clay similar to No. 4; whitish slip; appliqué knob decoration on top of handle
7	Jug	303	4011	Clay similar to No.5; strainer with pierced design decoration
8	Jug/juglet	300	4009	Clay similar to No. 4; incised designs on ext.
9	Jug	402	5009	Clay similar to No. 5; incised designs on ext.
10	Jug	402	5002	Clay similar to No. 5; incised designs on ext.
11	Jug	304	4017	Greenish white coarse clay with large black and pink inclusions; remains of chalky crust on ext.
12	Jug	203	3011	Greenish clay with black and white inclusions
13	Jug/juglet	303	4021	Same clay as No. 4; grooved decoration
14	Flask	303	4019	Coarse, pinkish yellow clay with large black and pink inclusions; greenish white slip on ext. and int.; chalky crust on int. and ext.; grooved neck decoration
15	Flask	107	2016	Same as No. 14
16	Flask	406	5047	Same clay as No. 4; greenish white slip on ext.
17	Flask	102	2010	Same clay as No. 5; rouletting on ext.
18	Antilia jug	300	4008	Reddish yellow coarse clay with large white and pink inclusions; yellowish buff slip on ext.
19	Antilia jug	404	5032	Reddish yellow clay; whitish green slip on ext. and int.
20	Pipe	102	2000	Greenish, very coarse clay with large pink and white inclusions
21	Closed vessel	402	5007	Clay similar to No. 20; combed geometrical pattern on ext.

top row, second jug from left), and those in Fig. 23:25–27 have a close parallel in form from south Ramla, although the ware is different (Tal and Taxel 2008:143, Fig. 6.91:47); Fig. 23:28 is the shoulder of a jug.

Early Islamic White-Buff Ware (Fig. 24).— The white-buff ware, also known as Khirbat al-Mafjar Ware, was produced from the mid-eighth to the eleventh century CE (Avissar 1996a:155–161, Types 2–12; Niamir 1999:45–47). It is plausible that most of this ware found at Azor was produced in Ramla, where large quantities of white-buff ware (including wasters) were recovered (Rosen-Ayalon and Eitan 1969; Kapitaikin, forthcoming). These vessels include bowls (Fig. 24:1, 2) and a lid (Fig. 24:3), which have parallels at south Ramla (Tal and Taxel 2008:152, Fig. 6.97:1; Kapitaikin, forthcoming: Fig. 2:1, 4, 9), and a flower pot(?) (Fig. 24:4), a peculiar kind of vessel with a double rim, pierced with holes,

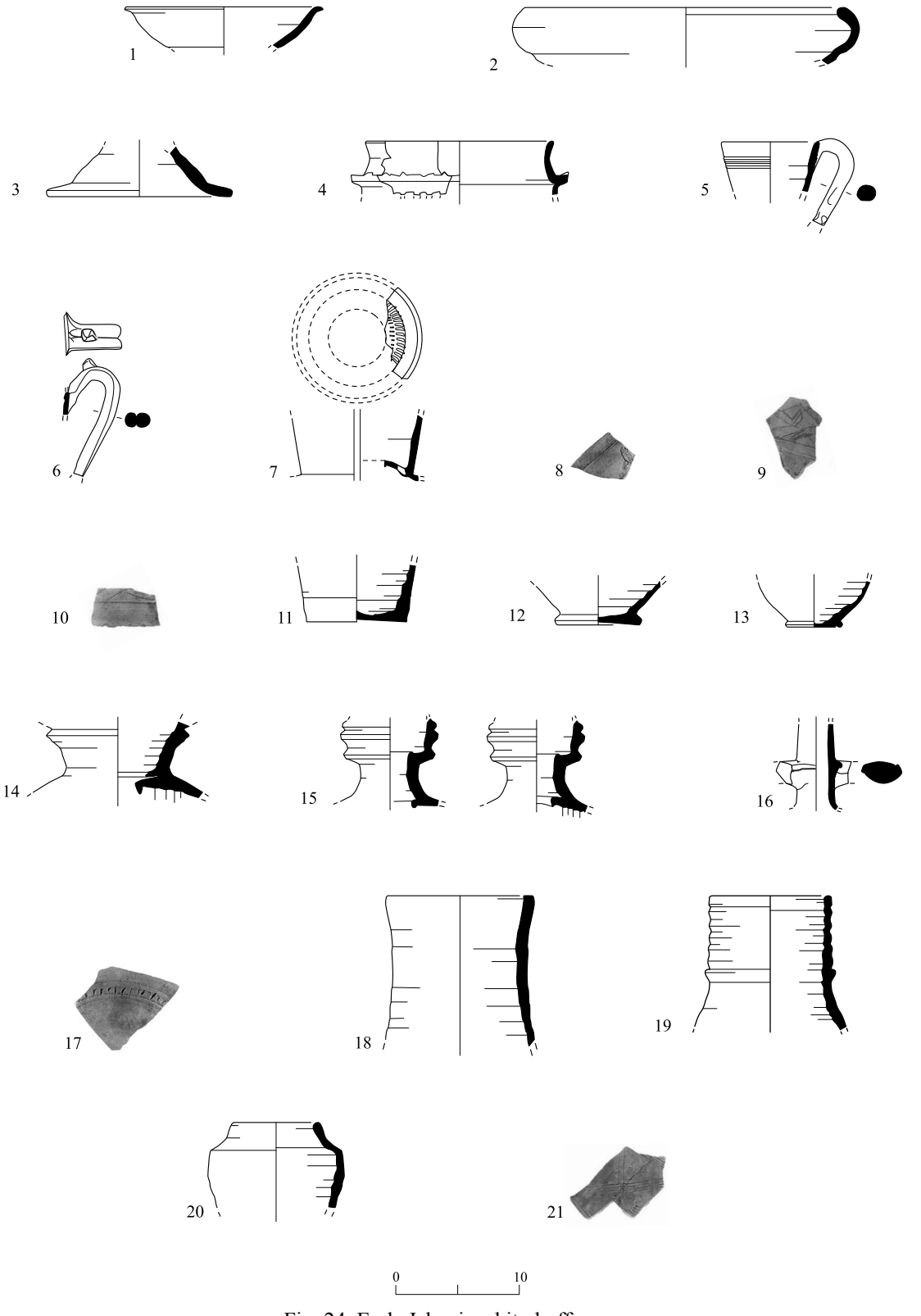

Fig. 24. Early Islamic white-buff wares.

whose function remains unknown; similar vessels have been found in various excavations at Ramla (Anna de Vincenz, pers. comm., September 2002).

Parallels for the jugs (Fig. 24:5–10) and jug bases (Fig. 24:11–13) were also recovered at south Ramla (Tal and Taxel 2008:139, Fig. 6.91:2–4, Type 1); the handle in Fig. 24:6 has an appliqué knob typical of this type of jug, and the sherds in Fig. 24:8, 9 are decorated with delicately incised designs (Avissar 1996a:156–158, 160–161, Types 2, 3, 5, 9–11; Tal and Taxel 2008:139, Fig. 6.91:5, 6, Type 2). Flasks with a ridged neck (Fig. 24:14, 15, 17?) are an especially common type (Baramki 1944: Fig. 15:6, Pl. 21:1; Whitcomb 1988: Fig. 1, Period 3:F, Type 19; Avissar 1996a:164–165, Fig. XIII.145; Kapitaikin, forthcoming: Fig. 3:11); Fig. 24:16 is a flask-like stirrup jug (Nahshoni 1999:103*, Fig. 5:15; Fabian and Goldfus 2004:11*, Fig. 10:9, dated to the Byzantine period), and the vessels in Fig. 24:18, 19 are antilia jugs. Based on the sharp ribbing on their bodies, the ridge above the narrowing on the body of Fig. 24:19, and the greenish white slip on the exterior, the antilia jugs probably date to the Early Islamic period (Ayalon 2000:224). The sherd in Fig. 24:20 is a fragment of a pipe (Baramki 1944: Fig. 4:2, designated 'small jar'). The combed decoration of Fig. 24:21 is reminiscent of the decoration on metallic ware bowls (see above, Fig. 23:1–6, and references therein).

Late Byzantine and Early Islamic Cooking Ware (Fig. 25).— Casseroles of shallower form with handles close to the rim (Fig. 25:1–3) may be of an earlier date than the deeper casseroles (Fig. 25:7–9), which are typical of the eighth–ninth centuries CE (Magness 1993:211–214, Forms 1, 3; Avissar 1996a:139, Fig. XIII.99, Type 12; Arnon 1999:226, Fig. 2:j, k; Tal and Taxel 2008: Fig. 6:87:8). Lids of casseroles of the later, deeper type (Fig. 25:4–6) were also found (Magness 1993:215).

The globular cooking pot with a thickened rim (Fig. 25:10) resembles a vessel discovered in a late Byzantine building at Caesarea (Adan-Bayewitz 1986:107–108, 127, Fig. 4:1). The sherd in Fig. 25:11 may belong to a rare type of cooking pot known mainly from Abbasid sites in northern Syria and the Khabour region (Orssaud 1992: Fig. C:1; Sodini and Villeneuve 1992:203, Fig. 7:7, 10). The globular cooking pots with short necks (Fig. 25:12, 13) are a well-known Early Islamic type, made of thin metallic ware with splashes of brown glaze, which began to appear as early as the ninth century CE (Avissar 1996a:132–134, Fig. XIII.91, 92, Forms 4, 5). Numerous glazed fragments of this type were found at Azor. The cooking pot in Fig. 25:14 is a similar type, but its sandy, gritty ware suggests a later date.

Late Byzantine and Early Islamic Coarse-Ware Bowls, Basins and a Mortarium (Fig. 26).— The bowls with incised or combed decoration (Fig. 26:1, 2) were the most common type of plain, Early Islamic bowl found at Yoqne'am (Avissar 1996a:127, Fig. XIII.81:1, Type 28), while the bowls in Fig. 26:4, 5 are paralleled by finds from late Byzantine contexts at Pella (Smith and Day 1989: Pl. 49:4, 7) and a late Byzantine building (seventh century CE) at Caesarea (Adan-Bayewitz 1986:109, Fig. 4:12); Fig. 26:3 is a lid.

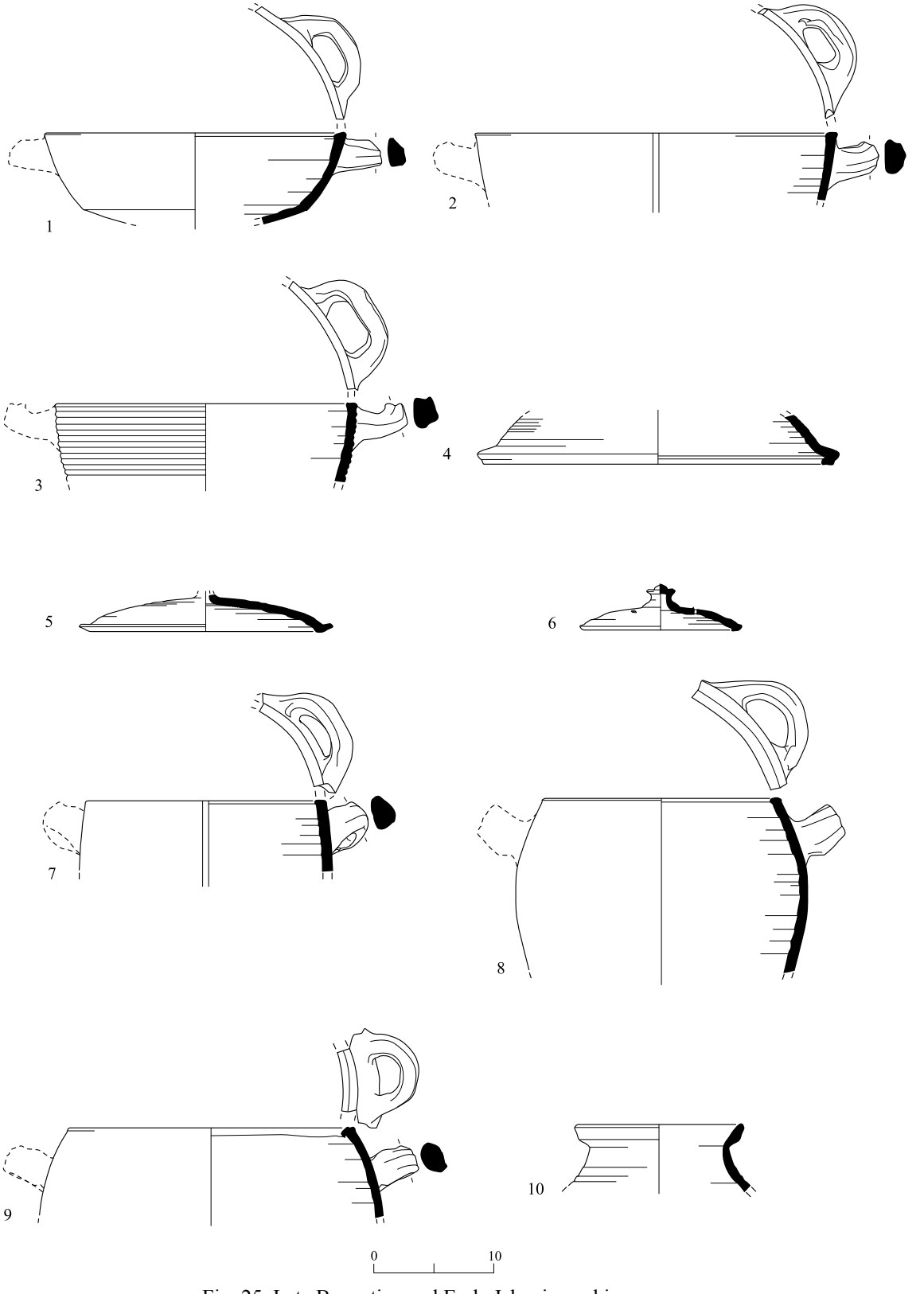

Fig. 25. Late Byzantine and Early Islamic cooking ware.

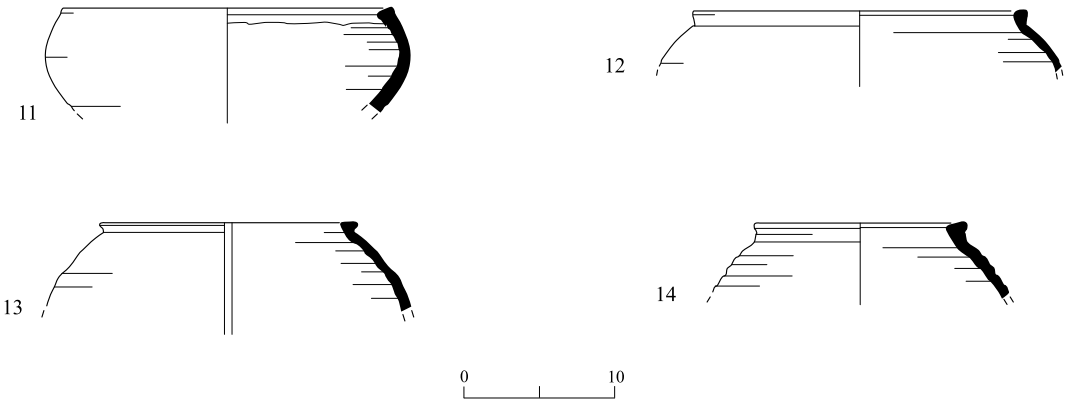

Fig. 25. (cont.)

No.	Vessel	Locus	Basket	Description
1	Casserole	908	5800	Brown and gray 'sandwich' clay
2	Casserole	206	3021	Brown clay
3	Casserole	406	5047	Brick-red clay
4	Casserole lid	401	5020	Brown clay
5	Casserole lid	103	2006	Grayish brown clay
6	Casserole lid	303	4012	Brown clay with gray core; drilled hole (diam. c. 0.3 cm) in cover
7	Casserole	206	3019	Gray and brown 'sandwich' clay
8	Casserole	102	2007	Brown-gray 'sandwich' clay
9	Casserole	301	4002	Brick-red and yellowish 'sandwich' clay
10	Cooking pot	108	2029	Brick-red clay fired brownish gray on surfaces
11	Cooking pot	401	5017	Brownish clay with gray core
12	Cooking pot	301	4002	Brick-red metallic clay
13	Cooking pot	304	4016	Brick-red metallic clay
14	Cooking pot	206	3023	Yellowish brown sandy clay

Incurving-rim basins with straight walls and combed decoration (Fig. 26:6–10) apparently first appeared in the late Byzantine period and continued into the Abbasid period (Baramki 1944: Fig. 10:3, 10; Whitcomb 1988: Fig. 1, Period 2:C; Magness 1993:209, Form 3, Nos. 3, 4). The form of the incurved-rim basins in Fig. 26:8–10 was especially popular in the Early Islamic period, dated to the eighth–tenth centuries CE (Magness 1993:210–211; Avissar 1996a:126, Fig. XIII.79; Tal and Taxel 2008:132, Fig. 6.85:2–4).

The fragment in Fig. 26:11 belongs to a mortarium (Riley 1975:36–37, No. 42; Blakely, Brinkmann and Vitaliano 1992:206, Fig. 5:4, 17, Class 7). The distinctive dark brown ware with quartz and volcanic inclusions attests that this vessel was imported.

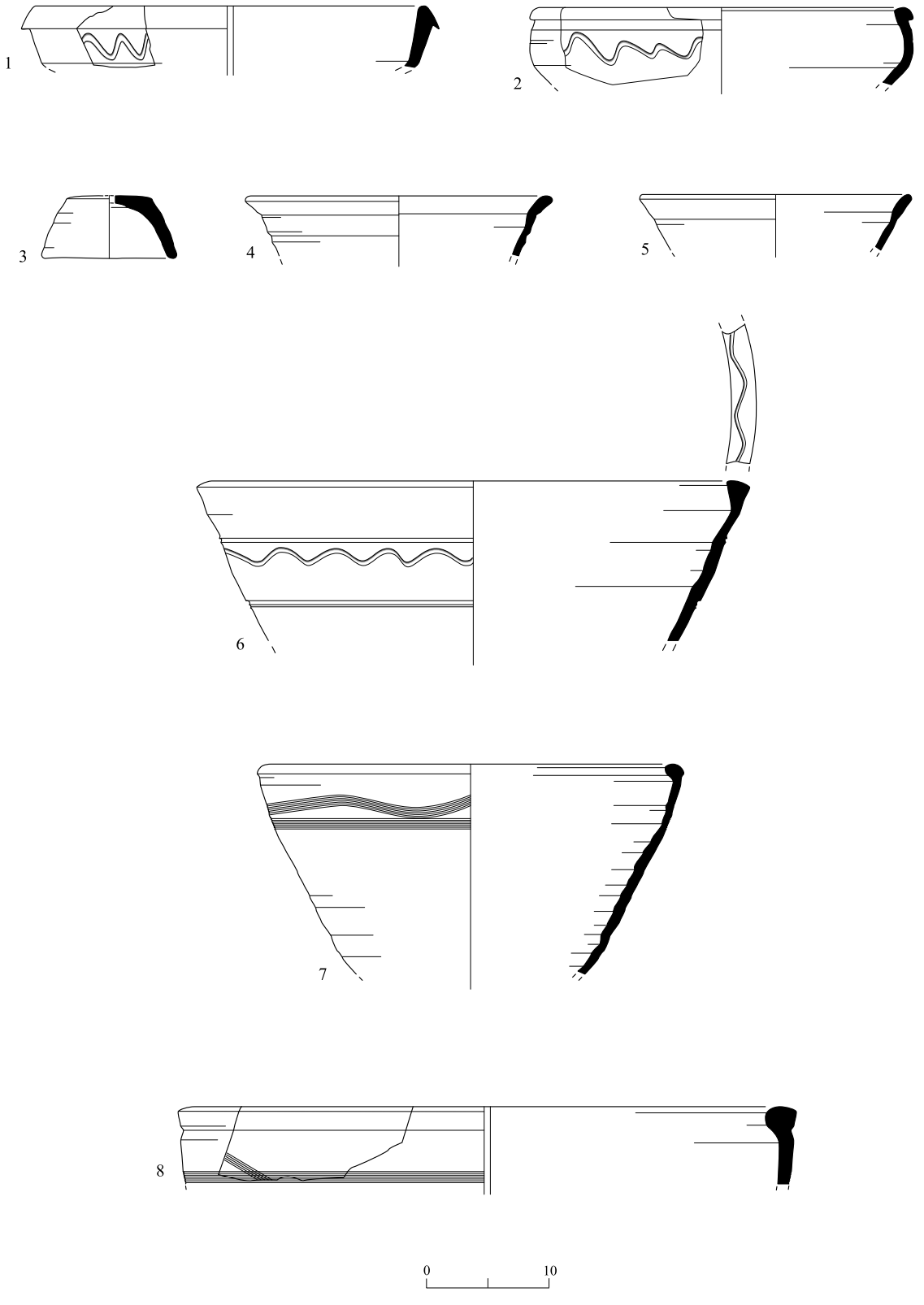

Fig. 26. Late Byzantine and Early Islamic coarse-ware open forms.

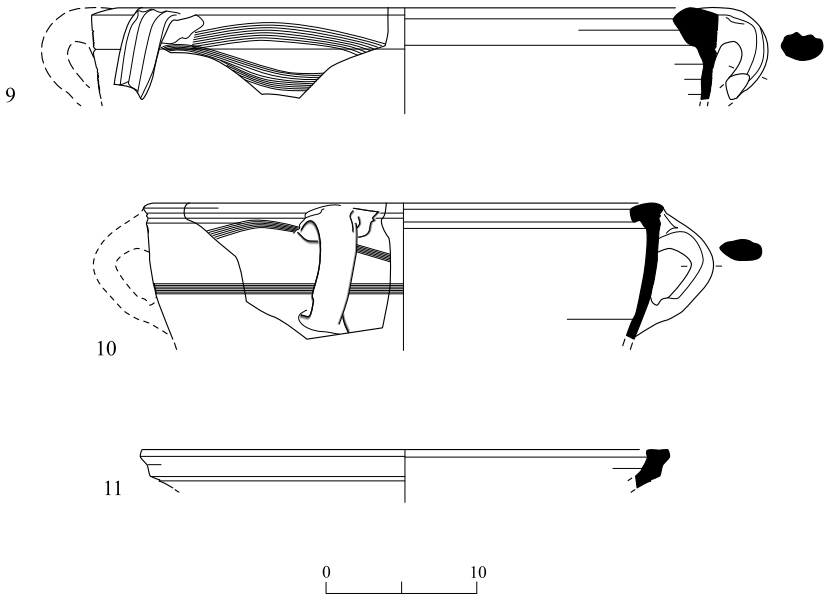

Fig. 26. (cont.)

No.	Vessel	Locus	Basket	Description
1	Bowl	107	2024	Light brownish sandy clay fired buff on ext.; incised wavy line on ext.
2	Bowl	405	5038	Reddish sandy clay with large white inclusions; incised wavy line on ext.
3	Lid	401	5018	Yellowish red clay; buff slip on ext.
4	Bowl	400	5002	Reddish clay with gray core
5	Bowl	404	5021	Brownish clay with gray core
6	Basin	400	5004	Coarse reddish clay with quartz and other large inclusions; incised straight and wavy lines on ext. and rim
7	Basin	400	5004	Reddish clay with yellowish core and large white inclusions; buff slip on ext.; wavy and straight combed lines on ext.
8	Basin	203	3012	Reddish brown clay with yellowish core fired reddish buff on surfaces; straight and wavy combed lines on ext.
9	Basin	103	2005	Brown clay; wavy combed lines on ext.
10	Basin	104	2012	Brown clay with gray core
11	Mortarium	601	7001	Coarse, hard-fired brown clay with quartz and volcanic-rock particles(?)

Late Byzantine and Early Islamic Coarse-Ware Jars and Jugs (Fig. 27:1–23).— The Gaza jar in Fig. 27:17 is dated to the sixth century CE (Peacock and Williams 1986:198–199, Class 49; Majcherek 1995:168–169, Form 3). The high-necked jar of greenish white clay (Fig. 27:1) was a type popular in the Abbasid period (Baramki 1944: Fig. 3:4; Whitcomb 1988: Fig. 1, Period 2:A). Jars made of reddish, sandy clay (Caesarea Amphora IB; Fig.

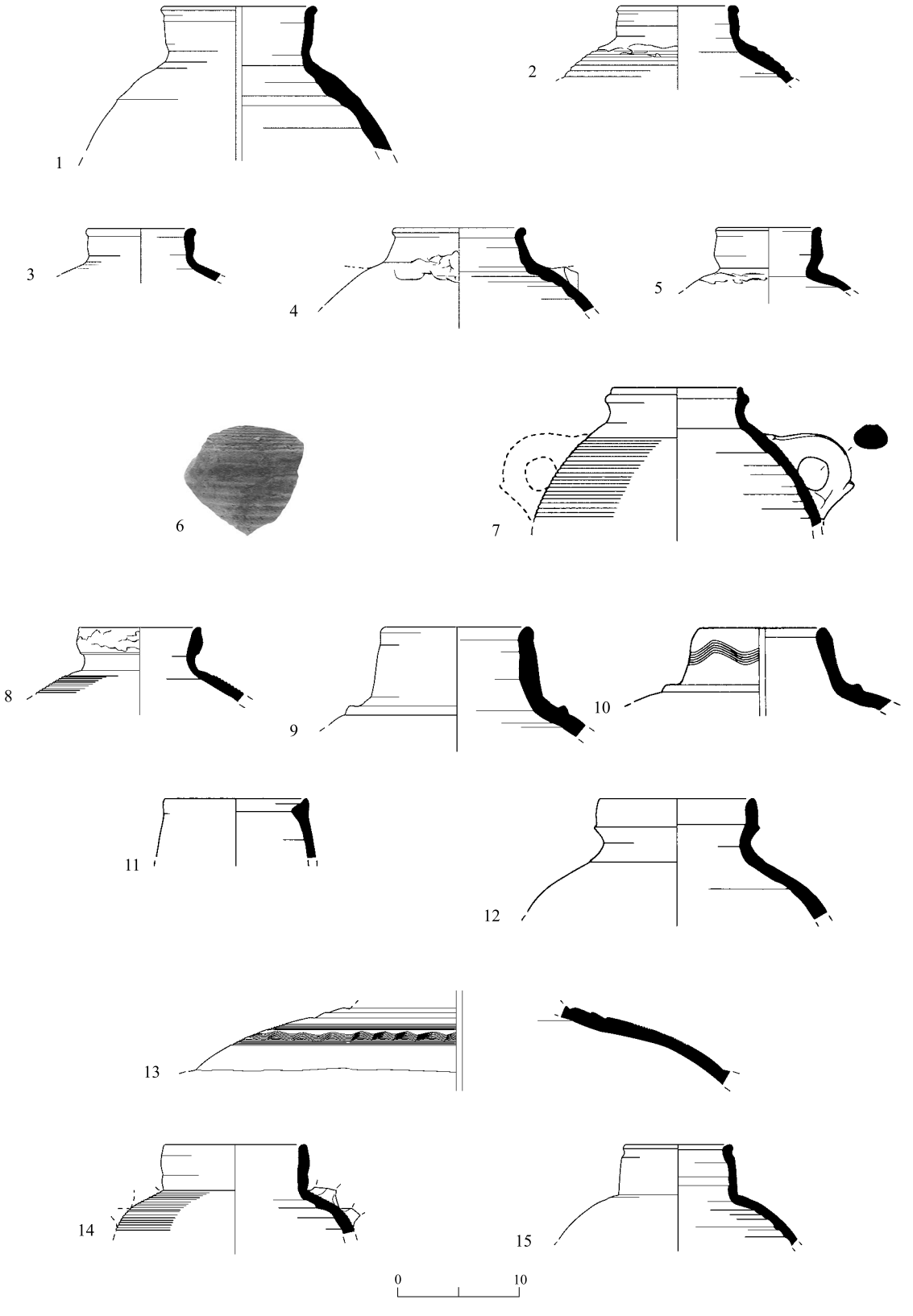

Fig. 27. Late Byzantine and Early Islamic coarse-ware closed forms and an ampulla.

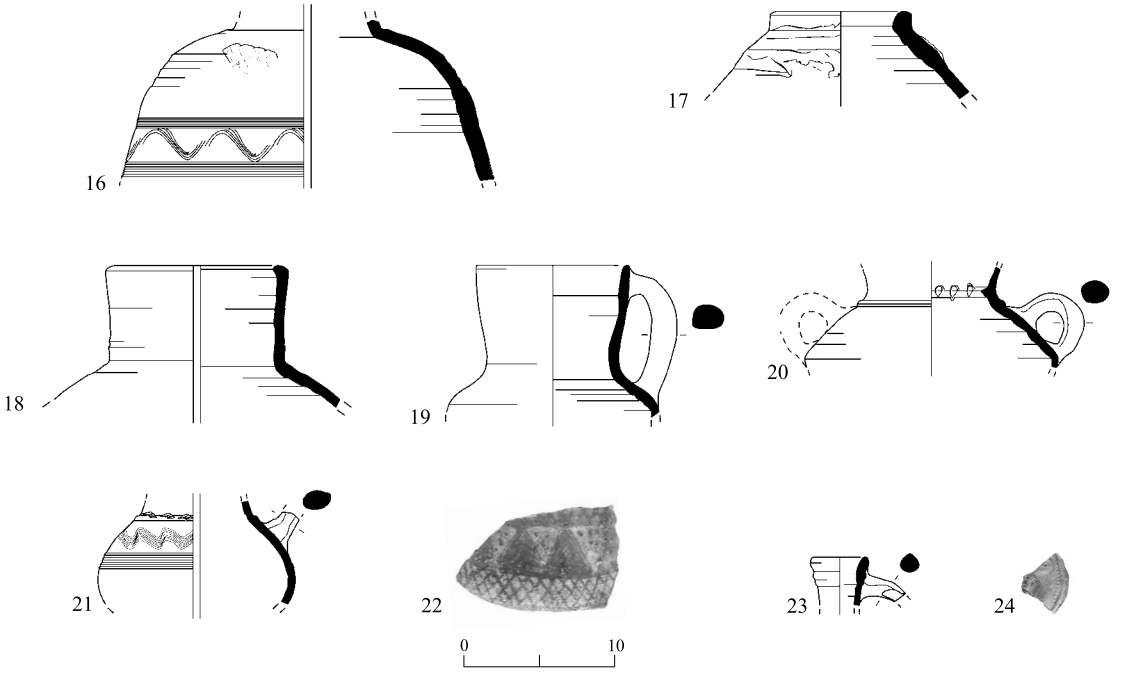

Fig. 27. (cont.)

No.	Vessel	Locus	Basket	Description
1	Jar	206	3019, 3023	Whitish green, very sandy and coarse clay
2	Jar	500	6000	Reddish sandy clay; buff slip on ext.
3	Jar	408	5046	Reddish sandy clay; buff slip on ext.
4	Jar	403	5027	Same clay as No. 2
5	Jar	206	3024	Brown clay with gray core
6	Jar	601	7001	Same clay as No.2
7	Jar	406	5047	Same clay as No. 2
8	Jar	406	5050	Reddish sandy clay; dull buff slip on ext.
9	Jar	204	3014	Buff, hard-fired clay
10	Jar	202	3008	Buff, hard-fired clay with gray core; combed, wavy lines on neck
11	Jar	203	3012	Reddish hard-fired clay; buff slip
12	Jar	103	2003	Light brown, hard-fired clay; buff slip on ext.
13	Pithos	402	5005	Hard-fired reddish clay with white inclusions; buff slip on ext.; combed design of straight and wavy lines on the ext.; worn int.
14	Jar	300	4009	Hard-fired, brick-red clay
15	Jar	300	4000	Brittle, brown clay fired grayish on ext.
16	Jar	303	4010	Blackish clay containing mica; fired brownish gray on ext.
17	Jar	500	6000	Brown clay
18	Small jar	204	3013	Hard-fired buff clay; yellowish buff slip
19	Jug	204	3015	Brownish, brittle clay; soot on ext.
20	Jug	303	4010	Reddish, hard-fired clay; buff slip on ext.; strainer
21	Jug	206	3021	Yellowish to brownish clay; buff slip; combed straight and wavy lines
22	Amphoriskos?	405	5029	Reddish, hard-fired clay; geometric decoration in red on white slip
23	Jug	108	2029	Brown clay
24	Ampulla	207	3018	Grayish clay fired whitish on surfaces; raised-dot decoration on base

27:2–8; see Riley 1975:26–27) are frequently covered with yellowish buff slip; far less frequently, they are adorned with a red-painted decoration (Fig. 27:6). This type of jar was one of the most common in the late Byzantine period and continued to appear in the eighth century CE. It was apparently manufactured on the coastal plain, and probably one of its main uses was the storage of wine. The jars in Fig. 27:2–4 have swollen necks. The ridged-neck examples in Fig. 27:5, 7, 8 are dated by Adan Bayewitz (1986:91–97, Fig. 1:4–7) to the late Byzantine period; however, Magness (1993:230–231) dates her similar storage-jar Form 7 from the late seventh century to as late as the tenth century CE.

The jars in Fig. 27:9, 10 correspond to Magness' storage-jar Form 6B (1993:227–230), dated to the late sixth–eighth centuries CE. The inner gutter of Fig. 27:11 is typical of this type of Early Islamic jar (Avissar 1996a:149, XIII.115:1, 2, Type 5; Kletter 2005: Fig. 19:10), while Fig. 27:12 is an Abbasid type with parallels at 'Opher Park in Ramla (Kletter 2005:79–80, Fig. 19:7), in south Ramla (Tal and Taxel 2008:146–147, Fig. 6.94:24) and at el-Qubeibeh (Bagatti 1947: Fig. 24:2). The holemouth pithos that is missing its rim in Fig. 27:13 is similar to one from 'Opher Park, also of Abbasid date (Kletter 2005:79–80, Fig. 19:1).

The Early Islamic jars in Fig. 27:14–16, made of hard-fired ware, have parallels at Kh. al-Mafjar (Baramki 1944: Fig. 3:6; Walmsley 1988: Ill.9:1, 2; Whitcomb 1988: Fig. 1, Period 3:A; for Fig. 27:14, see Tal and Taxel 2008:146, Fig. 6.94:4, 5; Kapitaikin, forthcoming: Figs. 4:12; 9:1). The Early Islamic jar in Fig. 27:18 is made of a fabric similar to that of Fig. 27:9, 10.

The jugs in Fig. 27:19–21 are Early Islamic in date; Fig. 27:19 has a parallel in south Ramla (Tal and Taxel 2008:139–140, Fig. 6.91:23); Fig. 27:21 has a combed design. The fragment of a closed vessel (Fig. 27:22; amphoriskos?) has a geometric design painted in brownish red over a white slip, a decoration characteristic of the Umayyad period (Walmsley 1988:152, Ill.7:5, 6). The vessel in Fig. 27:23 may be a late Byzantine jug.

Late Byzantine–Early Islamic Ampulla.— The fragment in Fig. 27:24 is an ampulla with a decorated discus (Magness 1993:259).

Late Byzantine–Early Islamic Lamps (Fig. 28:1–11).— The lamp in Fig. 28:1 is a common Byzantine large candlestick type dated to the mid-sixth–mid-eighth centuries CE (Rosenthal and Sivan 1978:116–121, Nos. 478, 479; Magness 1993:251–255, Form 3A; Hadad 2002:66–68, Nos. 287, 288); Fig. 28:2 is probably another fragment of a large candlestick lamp (Magness 1993:251–255, Form B). The lamp in Fig. 28:3 belongs to the Samaritan type and should be dated to the fifth–sixth centuries CE (Sussman 1983:80, 85, similar to Nos. 86–89; Hadad 2002:61–64, similar to Nos. 279, 280). The majority of the lamps recovered from the excavations (Fig. 28:4–10) belong to the Late Samaritan type decorated with linear patterns in relief. The fifth–eighth-century CE date proposed by Sussman for this type (1983:74, 85, Nos. 90–93, Pl. 12, Type 4) seems too early, as their pointed-oval shape, similar to Early Islamic lamps, suggests a later date. Rosenthal and Sivan date this type

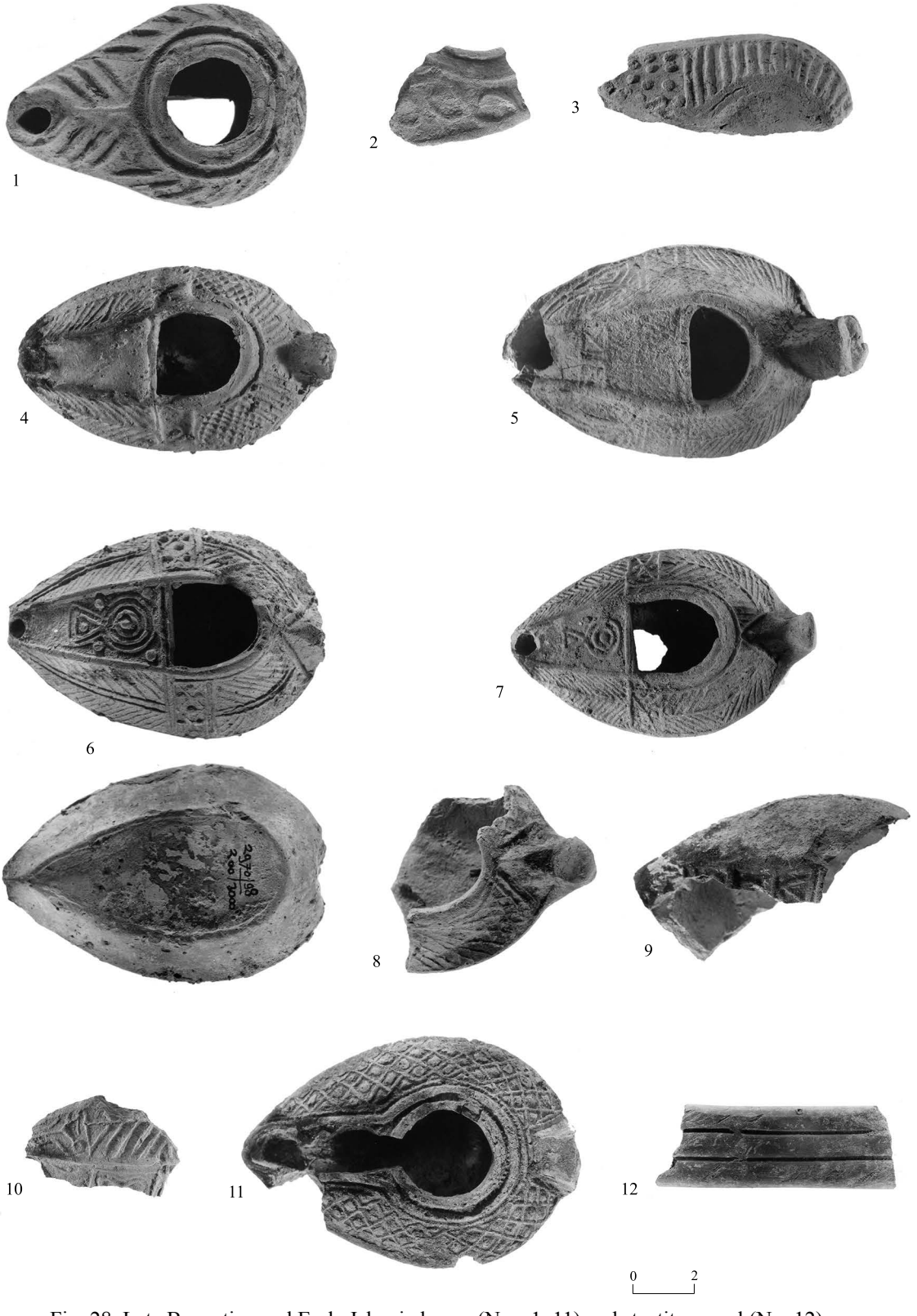

Fig. 28. Late Byzantine and Early Islamic lamps (Nos. 1–11) and steatite vessel (No. 12).

◂ **Fig. 28**

No.	Vessel	Locus	Basket	Description
1	Lamp	409	5052	Restored; broken base; H c. 3.0 cm, W 6.5 cm, L 9.5 cm; brownish clay with buff slip; soot deposit in wick hole; decorated with a candlestick pattern
2	Lamp	400	5003	Rim fragment; light brown clay; adorned with a scroll-like pattern?
3	Lamp	405	5029	Fragment; H c. 3.4 cm; brownish clay fired pink on surfaces; radial strokes and a raised-dot pattern on rim
4	Lamp	206	3021	Complete; H c. 3.6 cm, W 5.8 cm, L 9.9 cm; reddish pink clay; soot deposit in wick hole; tongue handle; flanking the handle are oblique lines and a net-like pattern; wide branch-like patterns flank the nozzle
5	Lamp	102	2002	Complete, except for broken wick hole; H c. 3.5 cm, W 7 cm, L 10 cm; pinkish clay; soot deposit in wick hole; tongue handle; flanking the handle are oblique lines and a wide branch-like pattern; flanking the nozzle is a net-like pattern incorporating raised dots and herring-bone patterns
6	Lamp	200	3000	Complete, except for broken handle; H c. 3.5 cm, W 6.9 cm, L 10 cm; metallic reddish clay; soot deposit in wick hole; wide branch-like patterns flank the handle; net-like patterns incorporate raised dots; wide branch-like patterns flank the nozzle; the nozzle is adorned with a geometric pattern that incorporates concentric circles, triangles and raised dots
7	Lamp	402	5011	Complete, except for hole in base; H c. 3.2 cm, W 6 cm, L 9.5 cm; pinkish clay; soot deposit in wick hole; tongue handle; the handle is flanked by wide branch-like patterns; at about mid-section on both sides are X-like patterns of raised dots; wide branch-like patterns flank the nozzle; the center of the nozzle is adorned with a geometric pattern that incorporates concentric circles and a triangle
8	Lamp	411	5053	Fragment of rear portion; H c. 3.5 cm; same clay as No. 2; traces of soot on ext. and int.; tongue handle decorated with oblique lines and net-like pattern
9	Lamp	301	4022	Fragment of front; H c. 3.9 cm; same clay as No. 1; soot deposit in wick hole; most of the decoration has deteriorated; zigzag pattern discernable on nozzle
10	Lamp	400	5003	Fragment of nozzle; same clay as No. 2; soot deposit in wick hole; decorated with a wide branch-like pattern and various other geometric patterns
11	Lamp	301	4022	Restored, with parts of the handle and nozzle missing; H c. 3 cm, W 7.2 cm, L 10.5 cm; greenish white clay; soot deposit in wickhole; tongue handle; a double raised ring encompasses the fill hole; a channel on the nozzle (broken); nearly the entire upper portion of its ext. is decorated with a net pattern of small rhombi adorned with raised dots
12	Steatite vessel	102	2011	Upper surface of rim features two parallel grooves

to the seventh–eighth centuries CE (Rosenthal and Sivan 1978:137–138, Nos. 570–573). In the excavations at Bet She'an, this type first appeared in the late sixth century CE, but it is still most commonly associated there with the seventh–eighth centuries CE (Hadad 2002:74–78, Nos. 320–336, Type 32). Tal and Taxel contend that the large numbers of these lamps in their excavations at south Ramla clearly indicate that they continued into the Abbasid period, at least until the ninth century CE (Tal and Taxel 2008:154–156, Figs. 6.101:1–6; 6.102:1–3, Type 1). The curious pattern consisting of a triangle and concentric circles on the nozzle (Fig. 28:6, 7) is paralleled at Bet She'an (Hadad 2002: No. 335) and in the Schloessinger collection (Rosenthal and Sivan 1978: Nos. 570, 571).

An Early Islamic lamp with a tongue handle and decorated with a net pattern of small rhombi (Fig. 28:11) is made of white-buff ware typical of Ramla (Kh. al-Mafjar Ware). This type has parallels at Yoqne'am (Avissar 1996b:192, No. 19, Fig. XV.19), Bet She'an (Hadad 2002: No. 422) and Ramla (Kapitaikin, forthcoming: Fig. 23:15). According to the evidence from Bet She'an and other sites, this type first appeared in the Abbasid period (after c. 750) and continued until the eleventh century (Hadad 2002:95–106; Tal and Taxel 2008:154, 158–159, Figs. 6.105:1–5; 6.106:1, 3–5).

Steatite Vessel (Fig. 28:12).— This fragment, decorated with grooves, belongs to a bowl or another object such as a box or a brazier. Steatite vessels are very common at Early Islamic sites of the eighth–ninth centuries CE in Syria-Palestine and elsewhere, for example at Ayla in Egypt and in southern Arabia (Hallett 1990; Magness 1994; Whitcomb 1995:27–28; see Stacey 2004:64 for a detailed discussion of this type).

SUMMARY

The limited nature of the six probes, none of which was excavated down to virgin soil due to temporal and budgetary constraints, resulted in a very partial picture of this site's history.

The likely presence of a late EB I settlement site, rather than a cemetery, at this location is indicated by sporadic sherds recovered from Area A. In Sq E, EB I sherds were discovered *in situ*, but only in the topmost level of a layer of unknown thickness (Stratum 4), directly below the foundations of the late Byzantine hypocaust remains (Stratum 3). It is also possible that these sherds are connected with the late EB I settlement remains encountered in a small probe on the tell of Azor and the *kurkur*-hewn burial caves of the same cultural horizon (see above).

In Area B, Sq G, a pottery assemblage dating exclusively to Iron I–II was unearthed in a fill directly beneath Byzantine building remains. Unfortunately, only the top of the Iron Age fill was probed and no structural remains were encountered. Two ceramic fragments found *ex situ* in Area A (Sq A) apparently belong to Iron Age cult stands, attesting to cultic activities at Azor during this period (c. tenth century BCE). These finds may be associated with the Iron I settlement uncovered c. 50 m to the southwest (see above), or the extensive Iron I cemetery c. 200 m to the south.

The bulk of the ceramic finds collected from the fill material in both Areas A and B is related to the late Byzantine and Early Islamic periods. Only in rare instances could pottery be directly related to architectural elements.

The architectural elements in Strata 3 and 2 of Area A, dating to the late Byzantine and Early Islamic periods respectively, all point to the existence of a bathhouse that functioned over a prolonged period of time: plastered and tiled walls, hypocaust remains including three cement water conduits, segments of clay pipes encased in lime mortar, and piles of ceramic tiles that once formed columns supporting a tiled floor. These bathhouse remains are a small contribution to the all-too-short list of ancient bathhouse ruins known within the greater Tel Aviv area from the late Byzantine–Early Islamic periods. By and large, the publications of comparanda for these bathhouses are cursory and preliminary in nature.[5] These include parts of a public bathhouse, comprising the hypocaust of the caldarium, revealed in Stratum II at Tell Qasile, dated to the Byzantine period (Mazar 1973:66; 1975:88); Byzantine bathhouse remains at Yafo, Ganor Compound (Peilstöcker and Burke 2009); remains of a Late Roman hypocaust and tepidarium at Gelilot (Kh. Jalil; Levy 1992:120); remains uncovered in what is today Ben Gurion Street in Bene Beraq, dated by pottery fragments found outside the bathhouse to the Late Roman–Byzantine periods (Shacham and Ayalon 1991); and remains of a caldarium of yet another Byzantine bathhouse at the same site, including a plastered wall, broken clay pipes and parts of a plain ceramic-tile floor supported by columns (Ayalon 1988).

[5] The authors would like to thank Eitan Ayalon and Martin Peilstöcker for providing us with the references mentioned here.

APPENDIX 1: List of Loci According to Squares

Square	Locus	Stratum	Description
A	100	1	Topsoil
A	101	1	Backfill of modern test trench in south of square
A	102	1	Cleaning surface after bulldozer work, straightening of balks
A	103a	1	One meter wide strip incorporating L101 and forming the southern section of Sq A: loose, featureless brownish soil on plastered Floor 103b covering most of the square
A	103b	2	Plastered floor
A	104	1	In southern part of square: narrow strip on level of stone debris, containing modern ceramic sewage pipe (adjoining L103a); in northern part of square: in-between stone debris of, and above plastered W100
A	105a	2	Sandy soil above, between and around W101
A	105b	3	Cobblestone floor
A	106	3	Layer of loose, reddish brown soil with a few stones and some ash—likely hypocaust debris; a segment of a cement conduit embedded in it
A	107	3	Below a layer of ash along western balk of square, same level as L106, three intact, ribbed bag-shaped jars (B2031, B2032, B2033) with several more protruding from the northern and western balks
A	108	4	Small probe into layer of sterile, yellowish orange sand in southeastern corner of square
A	109	5	Below sand layer in L108, sandy soil containing many late Byzantine sherds (above the unexcavated *ḥamra*)
B	300	1	Cleaning surface after bulldozer work, and straightening of balks
B	301	1/2	Western part of square just above hypocaust debris in L303
B	302	1	Modern pit/intrusion
B	303	2	Hypocaust debris in matrix of loose brownish soil containing some stone debris and piles of ceramic tiles
B	304	2/3	East of L303; loose brownish soil containing hypocaust debris, below apparent base level of the L303 ceramic tiles
C	200	1	Cleaning after bulldozer work and straightening of balks
C	201	1	Eastern sector of square (northern part not excavated), loose, brownish, featureless soil until top of W200 and W201
C	202	1	Cleaning after bulldozer removed 0.5 –0.7 m of soil
C	203	1/2	Loose, brownish, featureless soil below top level of W200, visible in western balk of square
C	204	2	North of W201
C	205	2	South of W200, area originally paved with ceramic tiles
C	206	2/3	Space between W200 and W201, with segment of cobblestone pavement in its northwestern end, and a cement conduit in its southeastern end
C	207	2	North of W201, below L204
E	400	1/2	Cleaning surface after bulldozer removed c. 1.1 m of topsoil; sherd-rich layer overlying W400 (visible in northern balk)
E	401	2/3	South of W400, loose, darkish brown soil around W403
E	402	2	Brownish soil south of W400—above and between the stones
E	403	2/3	Soot/charcoal layer in south of sector, in between stones and fill in disturbance of W403

APPENDIX 1. (cont.)

Square	Locus	Stratum	Description
E	404	2/3	Thick layer of soot/charcoal in northwestern corner of square, below W400 and W401
E	405	3	Fill of hypocaust debris with cement conduits, below W401 and W402
E	406	3	Fill of hypocaust debris below stone debris
E	407	3	West of cement conduits and hypocaust remains
E	408	3	West of cement conduits and hypocaust remains (top at 23.24 m asl)
E	409	3	Fill of cement conduits
E	410	2/3	Soil fill south of W400 and west of W403
E	411	4	Below L408, grayish, clayey soil containing mainly EB I sherds (c. 20 cm below top of cemented conduit)
F	500	1	Cleaning surface (half square only) after bulldozer removed c. 1 m of topsoil
F	501	2	Brownish soil above W500 in original trench
F	502	2	Brownish soil just below top level of W500 in eastern sector of square (continuation of L501)
G	600	1	Cleaning surface after bulldozer work
G	601	2	Cleaning after bulldozer work, level of W600 and associated floor
G	602	3	Light brown soil south of W600 and W601, Iron Age fill
G	603	3	Arbitrary level within Iron Age fill, c. 0.75 m below the top of L602
H	700	2	Stone-cut pit in floor beside W701 in the center of the trench

REFERENCES

Adan-Bayewitz D. 1986. The Pottery from the Late Byzantine Building (Stratum 4) and Its Implications. In L.I. Levine and E. Netzer. *Excavations at Caesarea Maritima 1975, 1976, 1979—Final Report* (Qedem 21). Jerusalem. Pp. 90–131.

Amiran R. 1969. *Ancient Pottery in the Holy Land, from Its Beginnings in the Neolithic Period to the End of the Iron Age*. Jerusalem.

Arnon Y.D. 1999. Islamic and Crusader Pottery (Area I, 1993–94). In K.G. Holum, A. Raban and J. Patrich eds. *Caesarea Papers* 2: *Herod's Temple, the Provincial Governor's Praetorium and Granaries, the Later Harbor, a Gold Coin Hoard, and Other Studies* (*JRA* Suppl. S. 35). Portsmouth, R.I. Pp. 225–251.

Avissar M. 1996a. The Medieval Pottery. In A. Ben-Tor, M. Avissar. and Y. Portugali. *Yoqne'am* I: *The Late Periods* (Qedem Reports 3). Jerusalem. Pp. 75–172.

Avissar M. 1996b. The Oil Lamps. In A. Ben-Tor, M. Avissar. and Y. Portugali. *Yoqne'am* I: *The Late Periods* (Qedem Reports 3). Jerusalem. Pp. 188–197.

Ayalon E. 1988. A Byzantine Road and Other Discoveries in the Vicinity of Tell Qasile. *Israel–People and Land* 4: 9–33 (Hebrew; English summary, p. 7*).

Ayalon E. 2000. Typology and Chronology of Water-Wheel (*Sāqiya*) Pottery Pots from Israel. *IEJ* 50:216–226.

Bagatti B. 1947. *I monumenti di Emmaus el-Qubeibeh e dei dintorni.* Jerusalem.

Baramki D.C. 1944. The Pottery from Kh. el-Mefjer. *QDAP* 10:65–103.

Bar-Nathan R. 1981. The Finds at Lower Herodion: Pottery and Stone Vessels of the Herodian Period (1st Century B.C.–1st Century A.D.). In E. Netzer. *Greater Herodium* (Qedem 13). Jerusalem. Pp. 54–70.

Bar-Nathan R. and Adato M. 1986. The Promontary Palace: Pottery. In L.I. Levine and E. Netzer. *Excavations at Caesarea Maritima 1975, 1976, 1979—Final Report* (Qedem 21). Jerusalem. Pp. 160–175.

Beck P. 1994. The Cult-Stands from Taanach: Aspects of the Iconographic Tradition of Early Iron Age Cult in Palestine. In I. Finkelstein and N. Na'aman eds. *From Nomadism to Monarchy: Archaeological and Historical Aspects of Early Israel.* Jerusalem. Pp. 352–381.

Blakely J.A., Brinkmann R. and Vitaliano C.J. 1992. Roman Mortaria and Basins from a Sequence at Caesarea: Fabrics and Sources. In R.L. Vann ed. *Caesarea Papers: Straton's Tower, Herod's Harbour, and Roman and Byzantine Caesarea* (*JRA* Suppl. S. 5). Ann Arbor. Pp. 194–213.

Bouchenino A. 2006. Azor. *HA–ESI* 118 (September 11). http://www.hadashot-esi.org.il/report_detail_eng.aspx?id=416&mag_id=111 (accessed November 29, 2018).

Braun E. In press. Early Bronze I Pottery: An Overview. In S. Gitin ed. *The Ancient Pottery of Israel and Its Neighbors*. Jerusalem.

Bretschneider J. 1991. Götter in Schreinen: Eine Untersuchung zu den syrischen und levantinischen Tempelmodellen, ihrer Bauplastik und ihren Götterbildern. *Ugarit Forschungen* 23:13–32.

Dagot A. 2014. Azor. *HA–ESI* 126 (November 17). http://www.hadashot-esi.org.il/Report_Detail_Eng.aspx?id=12655&mag_id=121 (accessed November 29, 2018).

DeVries LaMoine F. 1987. Cult Stands: A Bewildering Variety of Shapes and Sizes. *BAR* 13/4:26–33.

Fabian P. and Goldfus, H. 2004. A Byzantine Farmhouse, Terraces and Agricultural Installations at the Goral Hills Near Be'er Sheva'. *'Atiqot* 47:1*–14* (Hebrew; English summary, pp. 209–210).

Gawlikowski M. 1986. A Residential Area by the South Decumanus. In F. Zayadine ed. *Jerash Archaeological Project 1981–1983* I. Amman. Pp. 107–136.

Gil M. 1992. *A History of Palestine, 634–1099*. Cambridge.

Glick A. 2006. Azor (North). *HA–ESI* 118 (January 22). http://www.hadashot-esi.org.il/report_detail_eng.aspx?id=299&mag_id=111 (accessed November 29, 2018).

Golani A. and Brink E.C.M. van den. 1999. Salvage Excavations at the Early Bronze Age IA Settlement of Azor. *'Atiqot* 38:1–49.

Gophna R. 1974. *The Settlement of the Coastal Plain of Eretz Israel during the Early Bronze Age.* Ph.D. diss. Tel Aviv University. Tel Aviv (Hebrew; English summary, pp. V–XIII).

Gophna R. and Busheri M. 1967. Azor. *HA* 21:7–8.

Guz-Ziberstein B. 1995. A Typology of the Hellenistic Coarse Ware and Selected Loci of the Hellenistic and Roman Periods. In E. Stern ed. *Excavations at Dor; Final Report* I, B: *Areas A and C. The Finds* (Qedem Reports 2). Jerusalem. Pp. 289–433.

Hadad S. 2002. *The Oil Lamps from the Hebrew University Excavations at Bet Shean* (Qedem Reports 4). Jerusalem.

Hallett J. 1990. *The Early Islamic Soft-Stone Industry*. M.A. thesis. University of Oxford. Oxford.

Hayes J.W. 1972. *Late Roman Pottery*. London.

Herschkovitz M. 1987. The Pottery of the First and Second Centuries CE from Giv'at Ram. *Eretz-Israel* 19:314–325 (Hebrew; English summary, p. 83*).

Kapitaikin L. Forthcoming. *Ramla Palmah and E. Cohen Excavations: Ceramics, Lamps, Stone Finds and Steatite Vessels of the Early and the Late Islamic Periods* (Qedem Reports). Jerusalem.

Katz H. 2016. *Portable Shrine Models: Ancient Architectural Clay Models from the Levant* (BAR Int. S. 2791). Oxford.

Kletter R. 2012. Yavneh, Pierre Menard and the Bible. In M. Nissinen ed. *Congress Volume: Helsinki 2010 (Proceedings of the Conference of the International Organization for the Study of the Old Testamen Held in Helsinki, Finland, 1–6 Aug. 2010)* (Vetus Testamentum Suppl. 148). Leiden. Pp. 85–115.

Kletter R. 2015. A Clay Shrine Model. In R. Kletter, I. Ziffer and W. Zwickel. *Yavneh* II: *The 'Temple Hill' Repository Pit* (OBO.SA 36). Fribourg–Göttingen. Pp. 28–84.

Kletter R., Ziffer I. and Zwickel W. 2010. *Yavneh* I: *The Excavation of the 'Temple Hill' Repository Pit and the Cult Stands* (OBO.SA 30). Fribourg–Göttingen.

Landgraf J. 1980. Keisan's Byzantine Pottery. In J. Briend and J.-B. Humbert eds. *Tell Keisan (1971–1976)*: Une cité phénicienne en Galilée (OBO.SA 1). Fribourg. Pp. 51–99.

Levy Y. 1992. Gelilot (Kh. Jalil). *ESI* 10:120–121.

Magness J. 1993. *Jerusalem Ceramic Chronology: Circa 200–800 C.E.* (*JSOT*/ASOR Monograph Series 9). Sheffield.

Magness J. 1994. The Dating of the Black Ceramic Bowl with a Depiction of the Torah Shrine from Nabratein. *Levant* 26:199–206.

Majcherek G. 1995. Gazan Amphorae: Typology Reconsidered. In H. Meyza and J. Młynarczyk eds. *Hellenistic and Roman Pottery in the Eastern Mediterranean—Advances in Scientific Studies (Acts of the II Nieborów Pottery Workshop; Nieborów, 18–20 December 1993)*. Warsaw. Pp. 163–178.

Mayerson P. 1992. The Gaza 'Wine' Jar (*Gazition*) and the 'Lost' Ashkelon Jar (*Askalônion*). *IEJ* 42:76–80.

Mazar A. 1973. Excavations at Tell Qasîle, 1971–1972: Preliminary Report. *IEJ* 23:65–71.

Mazar A. 1975. Excavations at Tell Qasîle, 1973–1974: Preliminary Report. *IEJ* 25:77–88.

Mazar A. 1980. *Excavations at Tell Qasile* I: *The Philistine Sanctuary: Architecture and Cult Objects* (Qedem 12). Jerusalem.

Mazar A. 1985. Pottery Plaques Depicting Goddesses Standing in Temple Façades. *Michmanim* 2: 5–18.

McNicoll A., Smith R.H. and Hennessy B. 1982. *Pella in Jordan* 1: *An Interim Report on the Joint University of Sydney and the College of Wooster Excavations at Pella 1979–1981* (2 vols.). Canberra.

Muller B. 2016. *Maquettes antiques d'Orient: De l'image d'architecture au symbole.* Paris.

Nahshoni P. 1999. A Byzantine Site in the Migdal Neighborhood, Ashqelon. *'Atiqot* 38:99*–111* (Hebrew; English summary p. 229).

Nahshoni P. and Ziffer I. 2009. Caphtor, the Throne of His Dwelling, Memphis, the Land of His Inheritance. *Ugarit Forschungen* 41:543–580.

Negev A. and Gibson S. eds. 2001. *Archaeological Encyclopedia of the Holy Land* (rev. and updated ed.). New York–London.

Niamir M. 1999. A Corpus of Islamic Ceramics (Area Z, 1987 Season). In K.G. Holum, A. Raban and J. Patrich eds. *Caesarea Papers* 2: *Herod's Temple, the Provincial Governor's Praetorium and Graneries, the Later Harbour, a Gold Coin Hoard, and Other Studies* (*JRA* Suppl. S. 35) Portsmouth, R.I. Pp. 41–67.

Orni E. and Efrat E. 1976. *Geography of Israel*. Jerusalem.

Orssaud D. 1992. Le passage de la céramique byzantine à la céramique islamique: Quelques hypothèses à partir du mobilier trouvé à Déhès. In P. Canivet and J.-P. Rey-Coquais eds. *La Syrie de Byzance à l'Islam VIIe–VIIIe siècles (Actes du Colloque international Lyon—Maison de l'Orient méditerranén, Paris—Institut du Monde arabe 11–15 septembre 1990).* Damascus. Pp. 219–228.

Peacock D.P.S. and Williams D.F. 1986. *Amphorae and the Roman Economy: An Introductory Guide.* London–New York.

Peilstöcker M. Forthcoming. Azor. *HA–ESI*.

Peilstöcker M. and Burke A.A. 2009. Yafo, Ganor Compound. *HA–ESI* 121 (February 17). http://www.hadashot-esi.org.il/Report_Detail_Eng.Aspx?Id=1049&Mag_Id=115 (accessed March 29, 2010).

Riley J.A. 1975. The Pottery from the First Season of Excavation in the Caesarea Hippodrome. *BASOR* 218:25–63.

Rosen-Ayalon M. and Eitan A. 1969. *Ramla Excavations: Finds from the VIIIth Century C.E.* (Israel Museum Catalogue 66). Jerusalem.

Rosenthal R. and Sivan R. 1978. *Ancient Lamps in the Schloessinger Collection* (Qedem 8). Jerusalem.

Scanlon G.T. 1993. Fayyumi Pottery: A Long-Lived Misnomer in Egyptian Islamic Ceramics, Type I. In N. Swelim ed. *Alexandrian Studies in Memoriam Daoud Abdu Daoud* (Société archéologique d'Alexandrie Bulletin 45). Alexandria. Pp. 297–330.

Schaefer J. 1986. An Umayyad Potters' Complex in the North Theatre, Jerash. In F. Zayadine ed. *Jerash Archaeological Project 1981–1983* I. Amman. Pp. 411–449.

Schroer S. 2017. The Iconography of the Shrine Models of Khirbet Qeiyafa. In S. Schroer and S. Münger eds. *Khirbet Qeiyafa in the Shephelah (Papers Presented at a Colloquium of the Swiss Society for Near Eastern Studies Held at the University of Bern, September 6, 2014)* (OBO 282). Fribourg–Göttingen. Pp. 137–158.

Shacham Z. and Ayalon E. 1991. Ramat Gan. *ESI* 9:173.

Smith R.H. and Day L.P. 1989. *Pella of the Decapolis* 2: *Final Report on the College of Wooster Excavations in Area IX, the Civic Complex, 1979–1985.* Wooster.

Sodini J.-P. and Villeneuve E. 1992. Le passage de la céramique byzantine à la céramique omeyyade en Syrie du Nord, en Palestine et en Transjordanie. In P. Canivet and J.-P. Rey-Coquais eds. *La Syrie de Byzance à l'Islam VIIe–VIIIe siècles (Actes du Colloque international Lyon—Maison de l'Orient Méditerranén, Paris—Institut du Monde arabe, 11–15 septembre 1990).* Damascus. Pp. 195–218.

Stacey D. 2004. *Excavations at Tiberius1973–1974: The Early Islamic Periods* (IAA Reports 21). Jerusalem.

Sussman V. 1983. The Samaritan Oil Lamps from Apollonia-Arsuf. *Tel Aviv* 10:71–96.

Tal O. and Taxel I. 2008. *Ramla (South): An Early Islamic Industrial Site and Remains of Previous Periods* (Salvage Excavation Reports 5). Tel Aviv.

Torgë H. 2005. Azor. *HA–ESI* 117 (March 28). http://www.hadashot-esi.org.il/report_detail_eng.aspx?id=131&mag_id=110 (accessed May 30, 2005).

Walmsley A. 1988. Pella/Fihl after the Islamic Conquest (AD 635–*c.* 900): A Convergence of Literary and Archaeological Evidence. *MA* 1:142–159.

Watson P. 1992. Change in Foreign and Regional Economic Links with Pella in the Seventh Century A.D.: The Ceramic Evidence. In P. Canivet and J.-P. Rey-Coquais eds. *La Syrie de Byzance à l'Islam VIIe–VIIIe siècles (Actes du Colloque international, Lyon—Maison de l'Orient méditerranén, Paris—Institut du Monde arabe, 11–15 septembre 1990).* Damascus. Pp. 233–248.

Whitcomb D. 1988. Khirbet al-Mafjar Reconsidered: The Ceramic Evidence. *BASOR* 271:51–67.

Whitcomb D. 1995. *Ayla, Art and Industry in the Islamic Port of Aqaba.* Chicago.

Yekutieli Y. and Akus I. 2011. Azor, Ha-Melakha Junction (South). *HA–ESI* 118 (December 11). http://www.hadashot-esi.org.il/report_detail_eng.aspx?id=1892&mag_id=118 (accessed November 29, 2018).

Ziffer I. 2011. Diminished Sanctuaries for Grassroots Piety—the Case of the Cult Stands from the Repository Pit at Yavneh. *Eretz-Israel* 30:380–396 (Hebrew; English summary, pp. 156*–157*).