'Atiqot 100, 2020

Pottery Vessels and Oil Lamps from the Iron Age, Persian, Hellenistic, Roman and Byzantine Periods from Ben Gamli'el Street, Yafo (Jaffa)

Peter Gendelman

Introduction

The 2014 excavation on 10 Ben Gamli'el Street, Yafo, uncovered a large pottery assemblage, dating mostly from the late Iron Age to the Byzantine period (see Arbel, this volume). This article describes the pottery vessels and oil lamps, the majority of which belong to the Persian and Hellenistic periods, as well as a terracotta figurine of the Hellenistic period.[1] As much of the pottery was found in accumulations, the precise stratigraphic context of the vessels could not be verified. Thus, while the finds probably relate to walls, a direct link could not be proven. A few sherds of the Iron Age and Roman period, for which no occupation layers were uncovered in the excavation, are also described here. A small collection of pottery finds of the Ottoman period is described by Arbel (this volume).

The Late Iron Age

Bowl-Krater

Large Carinated Bowl-Krater with Folded Rim (Fig. 1:1).— Similar vessels were reported from layers dated to the eighth–seventh centuries BCE at sites such as Tel Gezer (Gitin 1990:217–219, Pl. 21:7–9) and Tel Ashdod (Ben-Shlomo 2005:202, Fig. 3.89:1; for further references, see Zimhoni 1997: Fig. 5.5:3).

Cooking Pot

Squat Cooking Pot with Protruding Ridge beneath Thickened Rim (Fig. 1:2).— The shape of this vessel is typical of Iron II cooking pots (ninth/eighth–seventh centuries BCE; cf. Bachi

[1] Drawings are by Marina Shuiskaya and photographs, by Clara Amit, both of the IAA.

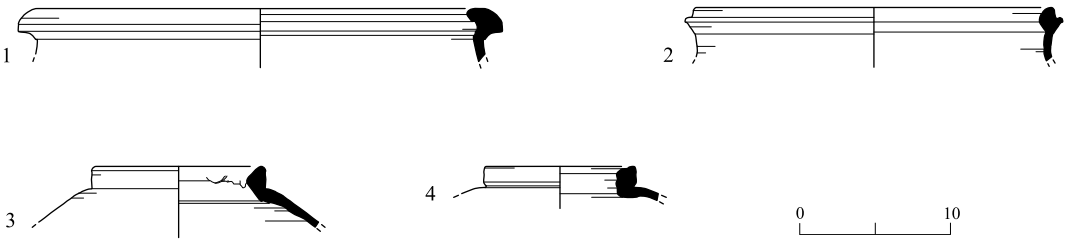

Fig. 1. Pottery from Iron Age II.

No.	Type	Reg. No.	Locus	Description
1	Bowl-krater	2111	227	Fabric: light reddish brown (5YR6/4), rough and gritty, with some minute dark and white grits; self slip, burnished horizontal strip on int.
2	Cooking pot	1053	119	Fabric: light brown (7.5YR6/4), rough and gritty, with some large grayish (lime) grits and quartz; self slip
3	Local amphora	1281	120	Fabric: yellowish red (5YR5/6), gritty and rough, with some minute brown grits; self slip
4	Local amphora	1096	120	Fabric: yellowish red (5YR5/6), gray core, gritty and rough, with some minute brown grits; self slip

1971: Figs. 40:9, 11; 55:5–17; Gitin 1990:217–219, Pls. 22:2, 3, 5; 24:14; Ben-Shlomo 2005:205, Fig. 3.90:1; Cohen and Bernick-Greenberg 2007:162, Pl. 11.74:9, 10; Greenhut and De Groot 2009:92, Figs. 3.12:2, 3; 3.15:1; 3.16:4).

Storage Jar

Local Storage Jar with Biconical Body, Carinated Shoulder and Internally Thickened Vertical Rim (Fig. 1:3, 4).— Similar vessels, dated from the late eighth–sixth or early fifth century BCE, are common at Yafo (Jakoel and Gendelman 2017:60*, Fig. 18:10; Tsuf 2018:209, Fig. 9.31:538) and at other sites along the southern coast and in the Shephelah region, such as Tel Mikhal (Singer-Avitz 1989:137, Fig. 9.14:10), Meẓad Ḥashavyahu (Type SJ2; Fantalkin 2001:64, Fig. 26:1–3), Tel Ashdod (Dothan and Freedman 1967:136, Fig. 38:3, 4; Kee 1971:38, Fig. 6:17, 18), Tel Ashqelon (Amphora 13, dated to the late seventh century BCE; Barako 2008:443, Fig. 23.13), Tel Gezer (Type 119B; Gitin 1990:229, Pl. 28:12–23), Tel Lakhish (Zimhoni 1997:211–262, Figs. 5.26; 5.28; 5.29:1–5) and Timna (Tel Batash; Mazar and Panitz-Cohen 2001:97–100, Fig. 6:SJ7b, Pls. 20:3; 35:4; 66:5).

THE PERSIAN AND HELLENISTIC PERIODS

The pottery assemblage of the Persian and Hellenistic periods (Stratum III) is rich and consists of fine table wares, including mainly types which were imported from workshops

in the eastern Mediterranean, household and cooking wares, and locally and regionally produced containers.[2]

Fine Table Wares

Attic Black Glaze Ware

Kantharos

High-Footed Kantharos with Molded Rim (Fig. 2:1–3).— Three fragments were found, including a rim, a spur handle, a foot and a body sherd decorated in the West Slope technique. Such vessels were found in the Athenian Agora, where they were dated from the second quarter of the fourth century till c. 300 BCE (Sparkes and Talcott 1970:122, 285–286, Fig. 7:700–704, Pl. 29:696–704; Rotroff 1997:85, 286, Fig. 6:36–43); some of these examples were decorated in the West Slope technique (cf. Sparkes and Talcott 1970: Pl. 29:702). A few such kantharoi were found in Yafo (Gendelman, in prep. [a]) and Samaria/Sebaste (Kenyon 1957:241–242, Fig. 46:1).

Saucer

Shallow Saucer with Beaded Rim, Low Ring Foot and a Floor Interior Decorated with Roulettes and Stamped Palmettos (Fig. 2:4, 5).— The vessel is thoroughly covered by a high quality glaze. The resting surface of its foot is reserved. This vessel type was produced between the early fourth and second half of the second century BCE (Sparkes and Talcott 1970:147; Rotroff 1997:142–145). The variant shown here is known from the Athenian Agora, where it was generally dated to the fourth century BCE (Thompson 1934:434, Figs. 2:A70; 116:A70; Sparkes and Talcott 1970:147, Fig. 10:1047–1050, 1056–1057), and more precisely to 350–325 BCE (Rotroff 1997:144, Fig. 46:631–633). This saucer was a common import throughout the Mediterranean region (see Rotroff 1997:143, n. 6), found for example at Yafo (Tsuf 2018: Fig. 9.47:795–800), Tel Kisan (Nodet 1980:127, Pl. 22:10), Tel Dor (Marchese 1995:131, Fig. 4.5:8, Photo 4.7), Apollonia-Arsuf (Fischer and Tal 1999:229, Figs. 5.7:1; 5.9:1), Tel Gezer (Gitin 1990: Pl. 47:1), Tel Maresha (Levine 2003:74, Fig. 6.1:1) and Kition, Cyprus (Salles 1983:26, Figs. 9:1, 2; 10:2; 1993:189, Fig. 201:2420).

Echinus Bowl

Deep Hemispherical Bowl with Ring Foot and Pointed, Slightly Incurved Rim (Fig. 2:6–8).— This vessel form, also known as an echinus bowl, appeared in Athens in the early fourth century BCE (Sparkes and Talcott 1970:131–132, Fig. 8:826–842, Pl. 33:837–842) and was continuously produced throughout the Hellenistic period (Thompson 1934:435–436; Rotroff 1997:161–164).

[2] The imported amphorae from this excavation were studied by Finkielsztejn (this volume).

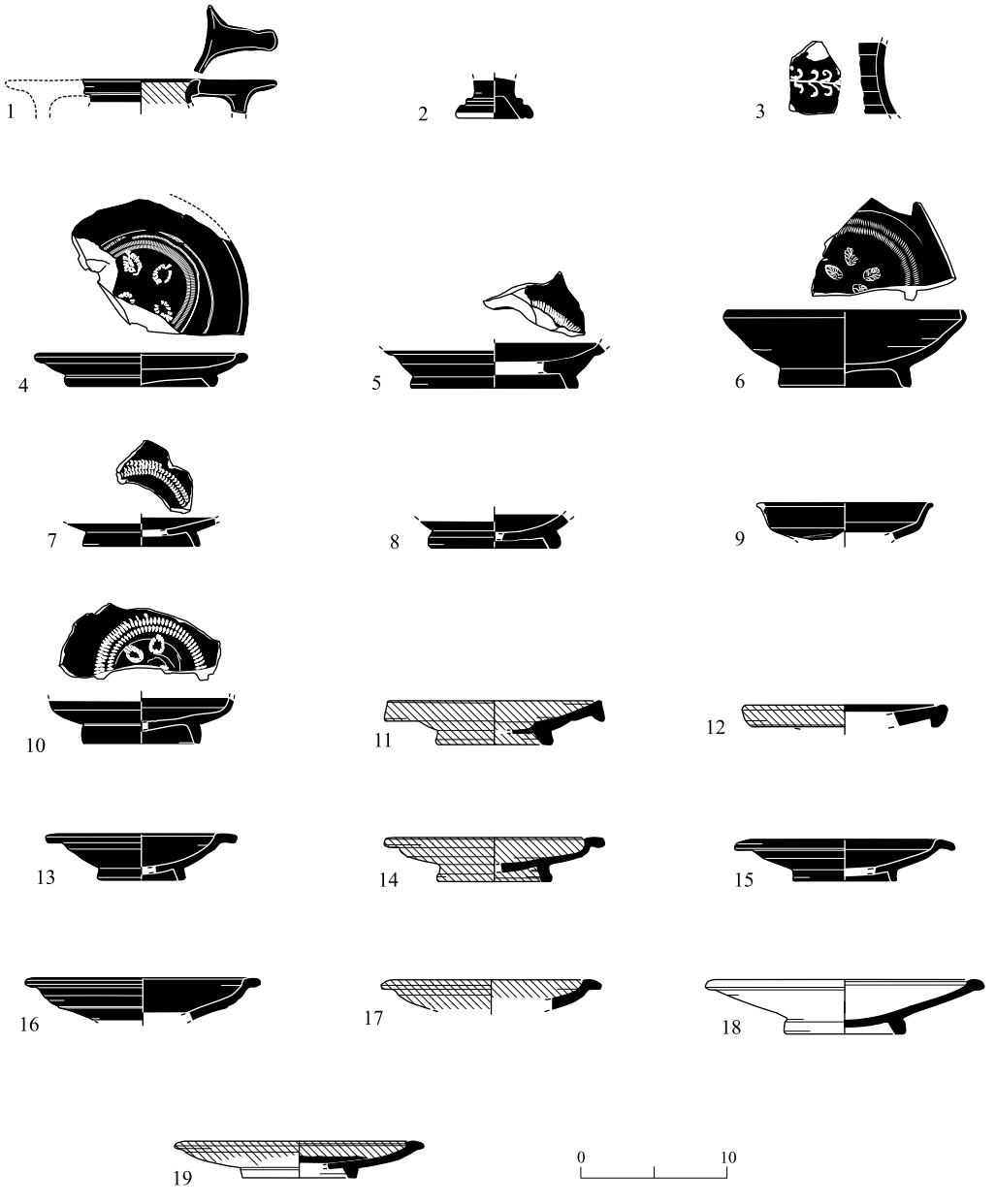

Fig. 2. Pottery from the Persian and Hellenistic periods: imported table ware.

No.	Type	Reg. No.	Locus	Description
1	Kantharos, Attic	1041/1	111	Fabric: reddish yellow (5YR 7/6), hard; dark gray to dark brown gloss on int., brilliant
2	Kantharos, Attic	1082/1	109	Fabric: reddish yellow (5YR 7/6), hard; dark gray gloss, brilliant
3	Kantharos(?), Attic	2501(?)	204	Fabric: reddish yellow (5YR 7/6), hard; dark gray gloss, brilliant; ext. decorated with left-oriented branch, in West Slope technique
4	Saucer, Attic	2050/2	214	Fabric: pink (7.5YR 8/4), hard; dark gray gloss, brilliant; decorated with rouletting and four stamped palmettos
5	Saucer, Attic	1025/2	107	Fabric: pink (7.5YR 8/4), hard; dark gray gloss, brilliant; decorated with rouletting

Fig. 2. (cont.)

No.	Type	Reg. No.	Locus	Description
6	Echinus bowl, Attic	2128/1, 2	286	Fabric: pink (7.5YR 8/4), hard, with some minute white grits; dark gray gloss, brilliant; junction of wall, base and resting surface reserved; decorated with rouletting and four stamped palmettos
7	Echinus bowl, Attic	2019	209	Fabric: pink (7.5YR 8/4), hard; dark gray gloss, brilliant
8	Echinus bowl, Attic(?)	1069	126	Fabric: pink (7.5YR 8/6), hard; dark gray gloss, brilliant; decorated with rouletting
9	Carinated bowl, Attic	2063	???	Fabric: reddish yellow (5YR 7/6), hard; dark gray gloss, brilliant, covering the junction of wall and reserved base
10	Carinated bowl, Attic	2118/3	230	Fabric: pink (7.5YR 8/4), hard, with some minute white grits; dark gray gloss, brilliant; junction of wall, base and resting surface reserved; decorated with rouletting and four stamped palmettos, three of them preserved
11	Fish plate	1118/1	135	Fabric: reddish yellow (5YR 7/6), hard, with some minute white grits; red slipped, polished, fully covered
12	Fish plate	2098/3	216	Fabric: reddish yellow (7.5YR 8/6), rather hard and rough, with some minute white and brown grits; slipped dark gray to red on rim
13	Saucer	2046	216	Fabric: reddish yellow (7.5YR 7/6), rather hard and rough, with some minute white and brown grits; dark brown to dark gray slip, fully covered
14	Saucer	1078/1	129	Fabric: reddish yellow (7.5YR 7/6), hard, with some minute white and dark grits; red to dark brown slip, polished, fully covered
15	Saucer	1078/2	129	Fabric: light reddish brown (5YR 6/2), hard, with some minute white and dark grits; dark gray slip, polished, fully covered
16	Saucer	2092	223	Fabric: reddish yellow (7.5YR 7/6), hard, with some minute white grits; dark gray slip, slightly polished, fully covered
17	Saucer	1110	133	Fabric: reddish yellow (7.5YR 7/6), hard, with some minute white and dark grits; thin red slip, slightly polished
18	Saucer	2060/1, 2	218	Fabric: dark gray (5YR 4/1), rather hard and gritty, with some minute white grits and silvery mica; dark gray slip/wash, polished, fully covered
19	Saucer	2097	202	Fabric: reddish yellow (5YR 7/6), hard, with some minute white grits; red to dark brown slip, slightly polished, fully covered except on base ext.

Two variants of this bowl shape were found in the present excavation. One is a wide and relatively shallow bowl with a thickened rim, a high ring foot and a resting surface which is reserved and grooved; it is made of a standard red fabric, covered with a high-quality black glaze, and the joint between the body and foot displays a reserved band (Fig. 2:6, 7). The floor of the vessel displays an under-glaze decoration, which includes rouletting and

a pattern of stamped palmettos. This "classic" shallow variant is dated to the early–mid-fourth century BCE (Sparkes and Talcott 1970:131–132, Fig. 8:835; Rotroff 1997:161–162, Fig. 62:965–981). Such bowls were found in deposits of the late Persian period in coastal Levantine sites, such as Tel Dor (Marchese 1995:127, Fig. 4.1:1–5, Photo 4.1a), Apollonia-Arsuf (Tal 1999:130–131, Fig. 4.27:9), Tel Mikhal (Marchese 1989:147, Fig. 10.2:1; Kapitaikin 2006:45–50, Fig. 13:2–5, 14) and Yafo (Tsuf 2018: Fig. 9.46:774–777), as well as Kition (Salles 1983:31–34, Figs. 11:19, 20; 12:20; 1993:187, Fig. 198:223).

The other variant of *echinus* bowl is deeper, with a simple low ring foot (Fig. 2:8). In Athens, such bowls were introduced in the last quarter of the fourth century BCE and ceased to be produced around 250 BCE (Rotroff 1997:162, Fig. 62:983–992). A few such vessels were found in coastal Levantine sites of the late fourth century BCE (Marchese 1989:147, Fig. 10.2:2, 3; 1995:127, Fig. 4.1:6–8, Photo 4.1b; Salles 1993:187, 192, 195, Figs. 198:224; 203:271; 206:291; Tal 1999:161–163, Fig. 4.27:9).

Carinated Bowls

Carinated Bowl with High Ring Foot, Reserved and Grooved Resting Surface, Slightly Flaring Wall and Out-Folded Rim (Fig. 2:9, 10).— These vessels are made of a standard reddish fabric and covered with a high-quality black glaze; their floor has an under-glaze decoration of rouletting and stamped palmettos. In the Athenian Agora, such vessels were dated to the late fifth–fourth centuries BCE (Thompson 1934:317, 430–432, 435, Figs. 115:A7; 117:A9; Sparkes and Talcott 1970:128–129, Fig. 8:802–808, Pls. 32, 33, 57, 58; Rotroff 1997:156–158, Fig. 59:866–868). These imported bowls are widely represented in the East and occur in coastal Levantine sites, such as Tel Dor (including an *in situ* find in a Persian-period context: Marchese 1995:127, Figs. 4.2; 4.3:2–3; and a residual find in a deposit of the fourth–third centuries BCE: Guz-Zilberstein 1995:321, Fig. 6.48:18), Apollonia-Arsuf (Tal 1999:106, 130, 161–163, Figs. 4.14:4; 4.27:4–7; 4.42:8–10), Tel Mikhal (Marchese 1989:147, Fig. 10.2:7; Kapitaikin 2006:45–50, Fig. 13:7–10) and Yafo (Tsuf 2018: Figs. 9.45:767, 768; 9.46:769–771), as well as at Antioch (Waagé 1948:11, Fig. 2:9, Pl. II:40) and Kition (Salles 1983:31–34, Figs. 11:29–31; 12:29–31; 1993:193–194, Figs. 205:278; 206:284; 207:284).

Unidentified Manufacture (Asia Minor and Levant?)

A large group of vessels, comprising a wide variety of common Hellenistic forms and made of diverse non-micaceous fabrics, was found. The location of their production centers remains a matter of speculation, and a number of possible workshops have been proposed (see Rosenthal-Heginbottom 2015, and discussion therein). The possibility that these vessels were produced in the Southern Levant is supported by their high frequency in excavations conducted at Yafo (e.g., Tsuf 2008: Figs. 9.1:20–26; 9.2; 9.3; 9.4:94–106).

Fish Plate

Fish Plate with Flaring Wall, Overhanging Rim and Ridge around Central Depression (Fig. 2:11, 12).— These vessels, of the classic fish-plate shape, are made of a reddish yellow fabric and are entirely slipped red to dark gray. This form is characteristic of the late Persian/early Hellenistic periods, found in deposits dating from the mid-fourth–mid-third centuries BCE, at many Levantine sites, such as Tel Dor (Guz-Zilberstein 1995:291, Type BL4a, Fig. 6.3:1–5), Tel Yoqne'am (Avissar 1996:48, Fig. X.1:15), Bet She'an/Nysa-Scythopolis (Johnson 2006:526, Fig. 15.1:8–10), Ramat Aviv (Gorzalczany 2003:7*, Fig. 2:6, 7), Yafo (Gendelman, this volume: Fig. 1:1; in prep. [a], [b]), and Antioch (Waagé 1948:11, Fig. 2:1, 2, Pl. I:10a–p).

Saucer

Small Saucers with Low Ring Foot and Wide, Arched Rim, without a Central Depression in the Floor (Fig. 2:13–17).— The fabric of these vessels is reddish yellow to reddish brown, and they are slipped red to dark gray; the slip covers the entire vessel. Similar vessels, thought to have originated from Cyprus, were found in a third-century BCE deposit at Kition (Salles 1993:200, Figs. 211:339; 212:340; 213:339, 340). In Israel, such saucers were reported from Tel Dor (Guz-Zilberstein 1995:293, Fig. 6.4:10–19, Type BL5b, generally attributed to the Hellenistic period), Bet She'an/Nysa-Scythopolis (Johnson 2006:526, Fig. 15.1:7), Tel Yoqne'am (Avissar 1996:48, Pl. X.1:13), Tel Ashdod (Bahat 1971: Fig. 98:12) and Yafo (Tsuf 2018: Fig. 9.3:72–73).

Small-Footed Saucers with Flaring Wall and In-Folded Lips (Fig. 2:18, 19).— These vessels are made of two different types of fabric: one, which is reddish yellow (Fig. 2:19), similar to the fabric of the small saucers described above; and another, which is micaceous (Fig. 2:18). Similar vessels were found at Tel Dor (Guz-Zilberstein 1995:292–293, Fig. 6.4:1–9, Type BL5a, dated to the end of the fourth–second centuries BCE), Samaria/Sebaste (Reisner, Fisher and Lyon 1924:297, Fig. 174:8, 29, 30; Kenyon 1957:222, Fig. 37:9, 10), Bet She'an/Nysa-Scythopolis (Johnson 2006:526, Fig. 15.1:11, 12, Photo 15.2) and Yafo (Tsuf 2018: Fig. 9.3:82–86), Antioch (Waagé 1948:11, Fig. 2:1, 2, Pl. I:2k) and Kition (dating from the end of the fourth century BCE; Salles 1993:197, 200, 265, Figs. 209:316; 210:316; 211:335–338; 213:335, 337; 227:490).

Echinus Bowls

Hemispherical, footed *echinus* bowls are the most common bowl type in Hellenistic-period pottery assemblages at Yafo (Gendelman and Jakoel 2017:301, Fig. 16.1:1, 2; Jakoel and Gendelman 2017:60*, Fig. 19:1–5; Tsuf 2018: Fig. 9.2:29–56; Gendelman, this volume: Fig. 1:7, 8). They are made of a variety of fabrics, the predominant one being reddish yellow to reddish brown, similar to that of some of the saucer types described above. Such bowls, which imitate classical Attic shapes (see Fig. 2:6–8), initially appeared in the second half of the fourth century BCE, and continued to be produced throughout the Hellenistic period,

as attested by the pottery assemblages retrieved from stratified and well-dated contexts in many East Mediterranean sites (Waagé 1948:13–15, Pl. II:76a, f, k; Kenyon 1957:26–27, Fig. 49:7–13; Hayes 1991:180, 248–251, Fig. 14:6–8; Slane 1997:359–361, Pl. 31:511, 514, 515, 517; Fischer and Tal 1999:230, Fig. 5.7:7, 8; Tal 1999:153–154, Fig. 4.35:2–4; Młynarczyk 2002:121, Fig. 4:61–63; Johnson 2006:524, Fig. 15.1:4). Several variants of *echinus* bowls were identified in the Ben Gamli'el Street assemblage.

Small Echinus Bowl with Incurved Rim (Fig. 3:1–7).— These bowls are similar to Guz-Zilberstein's Type BL 8a, dated to the second half of the fourth–early third centuries BCE at Tel Dor (Guz-Zilberstein 1995:290–291, Fig. 6.1:1–8). Such vessels were also reported from Sha'ar Ha-'Amaqim (Młynarczyk 2000:230, Pl. 117:10, 11) and Apollonia-Arsuf (Fischer 1989:183, Fig. 13.3:2, 3).

Large Echinus Bowl with Incurved Rim (Fig. 3:8).— This bowl is similar to Guz-Zilberstein's Type BL 8b (Guz-Zilberstein 1995:290–291, Fig. 6.1:25–27). Such vessels were reported from numerous sites (e.g., Briend 1980:109, Pl. 13:1; Vitto 2005:160, Fig. 9:8–10).

Echinus Bowl with Unusually High Wall and Upright Rim (Fig. 3:9).— No parallel was found for this unusual form of *echinus* bowl.

Calix Cup

Calix Cup with Flaring Pointed Rim (Fig. 3:10).— The fabric of this vessel is the same reddish yellow to reddish brown noted above for other vessel types. A similar vessel was reported from a third-century BCE deposit at 'Akko (Berlin and Stone 2016: Fig. 9.4:1).

Cup-Kantharos

High-Footed Cup-Kantharos Fragment (Fig. 3:11).— This vessel, made of a micaceous clay, seems to imitate the classical Attic kantharoi (see Fig. 2:1–3) or the cup-kantharoi with a plain rim, dated from the last quarter of the fourth century till the second quarter of the third century BCE (Rotroff 1997:86–87, Figs. 7; 8:72–77).

Skyphoid Cup

Deep Skyphoid Cups with Pairs of Spur Handles (Fig. 3:12, 13).— These vessels are made of two distinctive types of fabric. One fragment, which preserves the rim and part of the body (Fig. 3:12), is made of the reddish yellow to reddish brown fabric, similar to other vessels described above. The other example (Fig. 3:13) is made of reddish yellow micaceous clay, a rarer type of fabric. These cups are similar to Guz-Zilberstein's Form SK1, dated to 325–175 BCE at Tel Dor (Guz-Zilberstein 1995:294, Fig. 6.6:3–9). Such vessels are common finds at Yafo (Tsuf 2018: Fig. 9.4:96–99; Gendelman, this volume: Fig. 1:16, 17), and are generally widespread in Levantine sites of the third and second centuries BCE, e.g., Tel Kisan (Briend 1980:109, Pl. 13:26), Samaria/Sebaste (Kenyon 1957:226–227, 241–

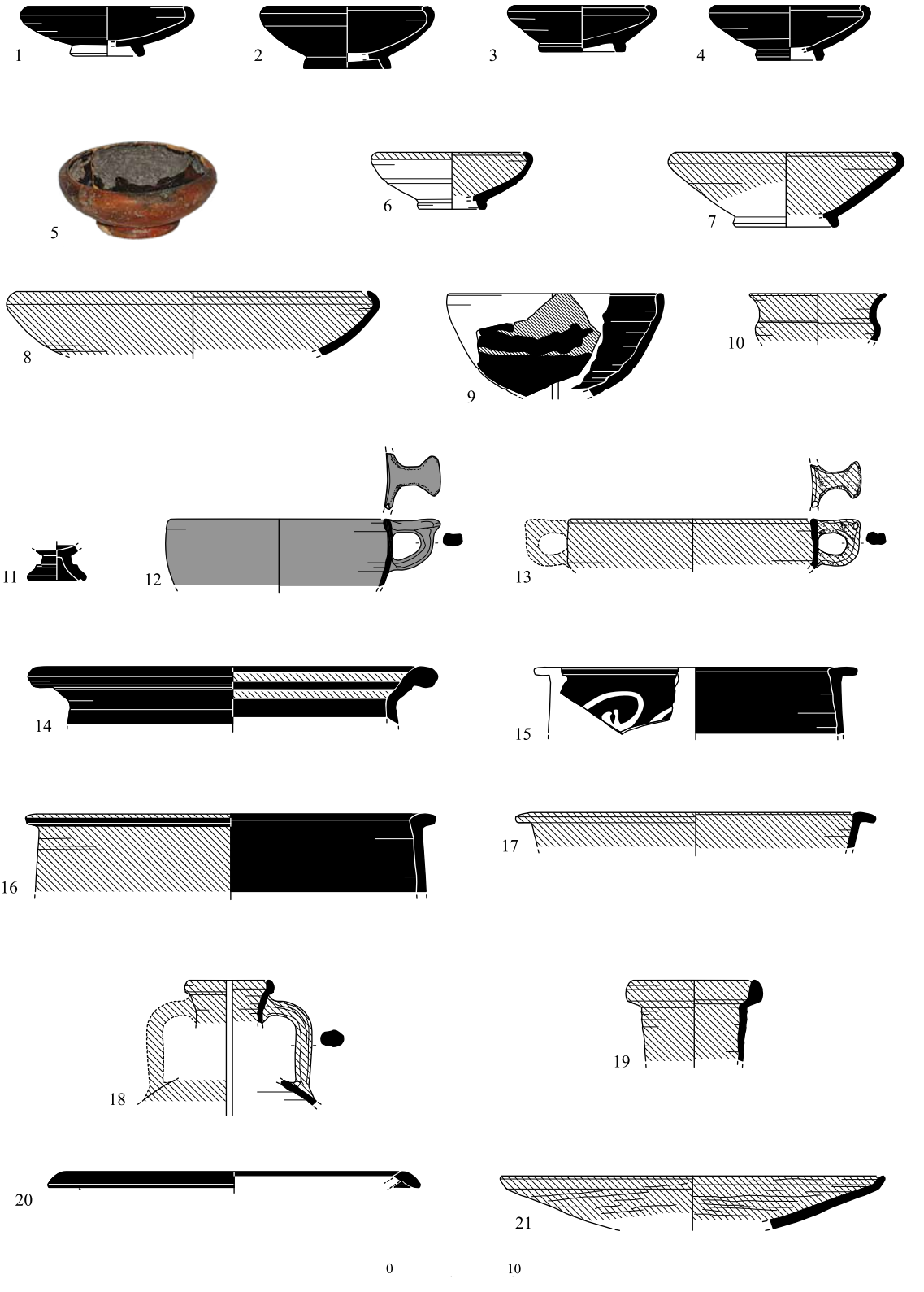

Fig. 3. Pottery from the Persian and Hellenistic periods: imported table ware (cont.).

◂ **Fig. 3**

No.	Type	Reg. No.	Locus	Description
1	Echinus bowl	1118/2	113	Fabric: light reddish brown (5YR 6/2), hard, with some minute white and dark grits; dark gray slip, polished, fully covered except for base ext.
2	Echinus bowl	2093/3	218	Fabric: reddish yellow (7.5YR 7/6), rather hard and rough, with some minute white and brown grits; thin dark brown to dark gray slip, fully covered except for base ext.
3	Echinus bowl	2118/2	230	Fabric: light reddish brown (5YR 6/2), rather hard and rough, with some minute white and dark grits; thin dark brown to dark gray slip, fully covered except for base ext.
4	Echinus bowl	2117/4	230	Fabric: very pale brown (10YR 7/4), rather hard and rough, with some minute dark grits; thin dark gray slip, slightly polished, fully covered except for base ext.
5	Echinus bowl	2089	216	Fabric: reddish yellow (5YR 7/8), hard, with some minute white grits and silvery mica; dark red to dark gray slip, fully covered except for base ext.
6	Echinus bowl	1113	126	Fabric: reddish yellow (7.5YR 7/6), hard, with some minute white and dark grits; thin red slip, slightly polished, on int. and ext. rim
7	Echinus bowl	2037	205	Fabric: light red (2.5YR 6/6), hard, with some minute brown grits; red to dark red slip, slightly polished, fully covered except for base ext.
8	Echinus bowl	2017/1, 2	202	Fabric: reddish yellow (5YR 7/6), hard, with some minute white grits; red slip polished, fully covered
9	Echinus bowl	1090/1, 2	133	Fabric: reddish yellow (7.5YR 7/6), rather hard and rough, with some minute white and brown grits; thin red to dark gray slip, slightly polished, fully covered
10	Calix cup	2050	214	Fabric: reddish yellow (7.5YR 7/6), hard; red to dark brown slip, polished, fully covered
11	Cup-Kantharos	2098/5	216	Fabric: brown (7.5YR 5/2), hard, with some minute white grits and silvery mica; dark brown to dark gray high-quality slip, polished, fully covered
12	Skyphoid cup	2077/3	223	Fabric: reddish yellow (5YR 7/6), hard, with some minute white grits; dark brown to dark gray slip, polished, fully covered
13	Skyphoid cup	1055	118	Fabric: reddish yellow (5YR 6/6), hard, micaceous; red to brown slip, polished, fully covered
14	Krater	1131	137	Fabric: reddish yellow (7.5YR 7/6), hard, with some minute white grits; dark brown to dark gray slip, slightly polished, fully covered
15	Krater	1052	122	Fabric: reddish yellow (7.5YR 7/6), hard, with some minute white grits; gray slip, slightly polished, fully covered; West Slope decoration painted white
16	Krater	2077/2	223	Fabric: reddish yellow (7.5YR 7/6), hard, with some minute white grits; brown to dark gray slip, slightly polished, fully covered
17	Krater	1134	126	Fabric: reddish yellow (5YR 7/8), soapy, with silvery mica; thin red slip/wash, fully covered
18	Jug	2115	229	Fabric: reddish yellow (7.5YR 7/6), hard, with some minute white and dark grits; thin red slip on ext. and neck int., slightly polished
19	Jug	2016	207	Fabric: reddish yellow (7.5YR 7/6), hard, with some minute white and dark grits; thin red to dark red slip, slightly polished
20	Fish plate, BSP	2021	211	Standard fabric; dark gray slip, polished, fully covered
21	Plate, ESA	1041	111	Standard fabric; high-quality, red slip, polished, double dipping

242, Figs. 39:4; 46:5, 6) Bet She'an/Nysa-Scythopolis (Johnson 2006:526, Fig. 15.1:14), Apollonia-Arsuf (Fischer and Tal 1999:237, Fig. 5.11:12), Tel Mikhal (Fischer 1989:185, Fig. 13.3:24), Tarsus (Jones 1950:216–217, Figs. 123:181; 181:183a, b, c), Kition (Salles 1993:187, 202, 266, Figs. 196:219–221; 197:219; 214:360, 364; 229:503). These vessels seem to have been produced in several workshops along the Ionian and Aegean coasts and in the Levant (Młynarczyk 2002:120, 123). The vessels made of the more common non-micaceous fabric may have been imported from eastern Cyprus (see Salles 1993:187; Młynarczyk 2000:230).

Kraters

Deep Krater with Funneled Neck and Massive Out-Folded Rim (Fig. 3:14).— A vessel of similar shape, albeit of Attic production decorated in the red-figure style, was found at Tel Dor and dates to the second half of the fifth century BCE (Marchese 1995:168–169, Fig. 4.8:17, 18, 21).

Deep, Bell-Shaped Kraters with Low Ring Foot and Wide-Arched Rim (Fig. 3:15–17).— These examples are slipped dark gray to light red, and are made of two types of fabric: a reddish yellow to reddish brown fabric, similar to that of other vessels described above; and a micaceous reddish yellow fabric (Fig. 3:17). One fragment preserves a white-painted decoration of ivy tendrils on the upper exterior of the vessel (Fig. 3:15). These vessels are similar to Guz-Zilberstein's Type KR10*,* dating from the late fourth century till c. 125 BCE at Tel Dor (Guz-Zilberstein 1995:296, Fig. 6.12:1–6), as well as to Rosenthal-Heginbottom's "Krater with Ledge Rim" type (Rosenthal-Heginbottom 1995a:228–229, Fig. 5.11:4–6). Such vessels were also reported from Beirut (Élaigne 2007:121, Fig. 19), Bet She'an/Nysa-Scythopolis (Johnson 2006:526, Fig. 15.1:15, 16), Samaria/Sebaste (Kenyon 1957:266–267, Fig. 57:5–7), Sha'ar Ha-'Amaqim (Młynarczyk 2000:230, Pl. 118:2) and Yafo (Tsuf 2018: Fig. 9.12:274–275). Élaigne (2007) and Młynarczyk (2000) suggested that these vessels were produced in eastern Cyprus, whereas Rotroff (2002:211), who includes this type within her "Ivy Plate Group," considered the Cilician or Levantine coasts as its probable production centers (Rotroff 2002:211).

Table Jug

Footed Table Jug with Wide, Bowl-Shaped Mouth (Fig. 3:18, 19).— Vessels of a similar shape were reported from Tel Dor, in layers of the third–second centuries BCE (Guz-Zilberstein 1995:308, Fig. 6.29:13, 14), and at Samaria/Sebaste (Kenyon 1957:269, Fig. 58:7, 8).

Black-Slipped Predecessor (BSP) of Eastern Sigillata A (ESA) Ware

The vessels of this group were made of a distinctive hard pink fabric (10YR 8/3–7.5YR 7/4), characteristic of both *BSP* and *ESA* (see below) and slipped in mottled black/brown hue. This group was first identified at Tel Anafa (Slane 1997:269–274). Its production period was dated to c. 150–128/125 BCE (Slane 1997:257–261).

Fish-Plate with High Sloping Wall and Arched Rim (Fig. 3:20).— This example is similar to Slane's BSP Type 1, dated to 150–125 BCE (Slane 1997:275–276, Pl. 1:1–7), Hayes' ESA Form 1 (Hayes 1985:13–14, Tab. I:1) and Guz-Zilberstein's Type BL4b (Guz-Zilberstein 1995:291, Fig. 6.3:6–16, Photos 6.7–8).

Eastern Sigillata A

Wide, Flaring Platter with High Foot and Pointed Rim (Fig. 3:21).— This example is similar to Samaria Form 1 (Crowfoot 1957b:309), Atlante ESA Form 3 (Hayes 1985:14–15, Pl. I:7, 8) and Tel Anafa Type 13b, dated to the late second century BCE (Slane 1997:285–287, Pl. 6:61–66).

HOUSEHOLD WARES

Mortaria and Coarse Bowls

Imported Mortarium/Bowl with High Trumpet Foot, Flaring Wall and Out-Folded, Thickened Rim (Fig. 4:1, 2).— These vessels, made of a gritty, light-colored fabric, are common in Persian-period layers at Yafo (e.g., Tsuf 2018: Fig. 9.15:315–320; Gendelman, this volume: Fig. 2:1). They have been called "Persian Bowls" or "Levantine Mortaria" (Blakely and Bennett 1989), and are similar to Stern's Type B5b, dating from the sixth–fourth centuries BCE (Stern 1982:98–101, Fig. 121; 1995:53–55, Fig. 2.2:1–5, 14, 15). A Cypriot/Aegean origin has been suggested for these vessels (Tal 1999:97–98). While it has been argued that these vessels typically date to the Persian period, evidence from Tel Kisan (Briend 1980:108, Pl. 12:1–3) and Tel Dor (Type BL 14b; Guz-Zilberstein 1995:295, Fig. 6.9:1–7) suggests that they continued to be imported till the early third century BCE. These mortaria/bowls were common at Kition (Salles 1983:72–74, Fig. 28:233–241; 1993:182, 189, 195, 237–239, 268, Figs. 193:186; 200:241; 208:302; 221:429; 230:525, 526), at sites along the Levantine coast and in the inland parts of the Levant (Berlin 1997:124–127, Pl. 38:341–347, and see therein further references; Sapin and Sayegh 1998:80–83, Figs. 20:1–15, 21; Johnson 2006:530, Fig. 15.2:37; Kapitaikin 2006:23–27, Fig. 2:1–9; Cohen and Bernick-Greenberg 2007:174, Fig. 11.82, Pl. 11.131:1, 2; Stern 2007:200, Photo 5.26).

Imported Mortarium/Bowl with Flaring Wall and Thickened Rim, Grooved on Top (Fig. 4:3).— This vessel is made of a gritty, light-colored fabric, similar to that of the "Levantine Mortaria" described above.

Spouted, Flat-Based Mortaria with Shelf-Like, Finely-Grooved Rim and Rudimentary Shelf Handles with Thumbed Decoration (Fig. 4:4–7).— These East Mediterranean vessels imitate the shape of Greek mortaria, known from the early fifth–fourth centuries BCE (Sparkes and Talcott 1970:221–223, Fig. 16:1898, Pl. 92). Two distinct types of fabric were identified in the Ben Gamli'el Street assemblage: a beige fabric (Fig. 4:4, 6), which may indicate an affinity with Cypriot Plain White VII vessels (Salles 1993:189), and a reddish brown

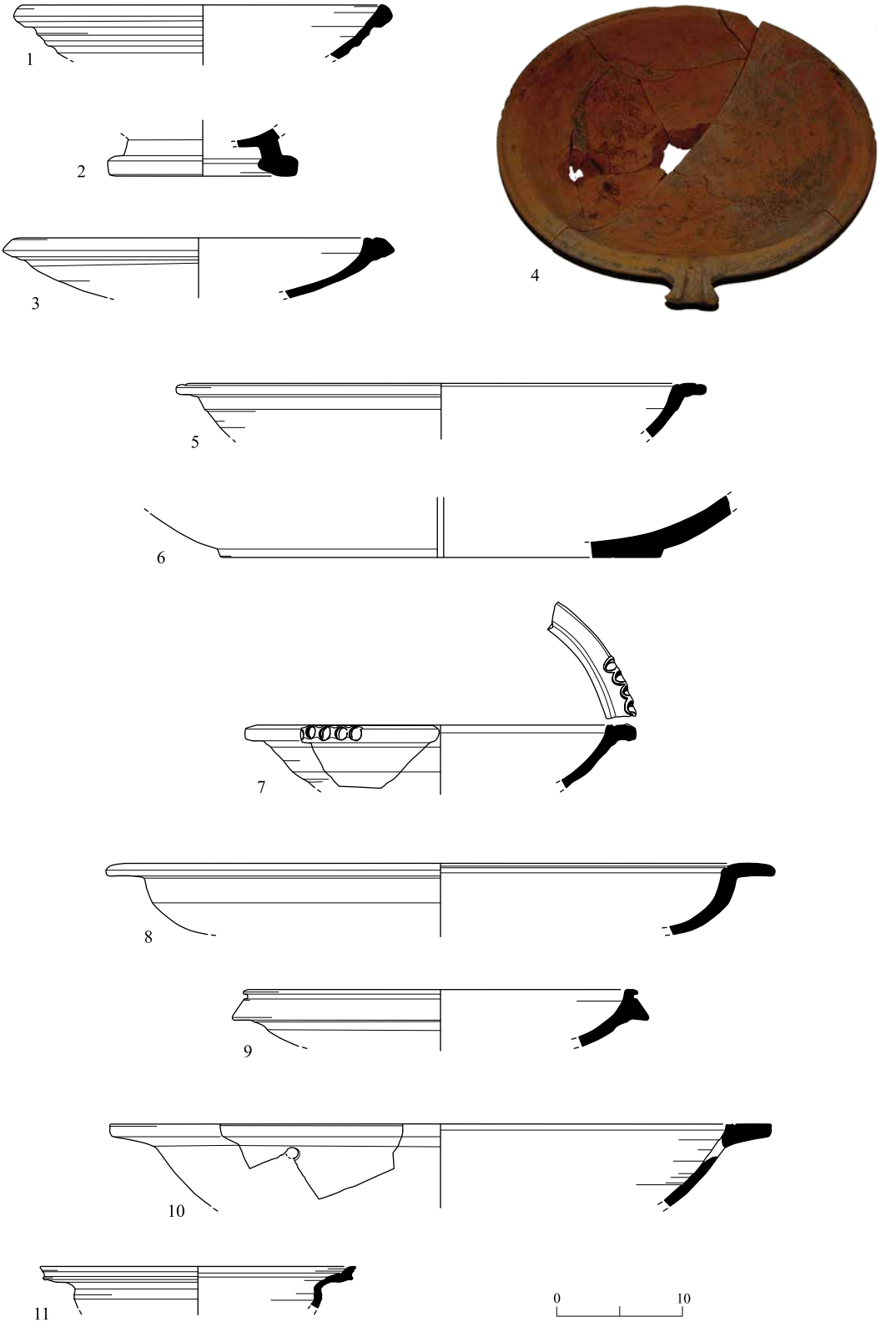

Fig. 4. Pottery from the Persian and Hellenistic periods: household wares.

◂ **Fig. 4**

No.	Type	Reg. No.	Locus	Description
1	Mortarium	2040/1	212	Fabric: very pale yellow (2.5Y 7/4), gritty, hard, with some small dark and brown pebbles; self slip
2	Mortarium	1041/2	111	Fabric: reddish yellow (5YR 6/6), rather hard and gritty, with small shining dark and minute white grayish grits and silvery mica; self slip
3	Mortarium	1118/2	135	Fabric: very pale yellow (2.5Y 7/4), gritty, hard, with some small dark and brown grits; self slip
4	Mortarium	1095	129	Fabric: very pale brown (10YR 8/4), gritty, hard, with small dark and brown pebbles and some silvery mica; self slip; worn int.
5	Mortarium	1116/2	134	Fabric: reddish yellow (7.5YR 7/6), rough, with some minute dark and red grits and quartz; self slip
6	Mortarium	1041/1	111	Fabric: very pale brown (10YR 8/4), gritty, hard, with small dark and brown pebbles and some silvery mica; self slip; worn int.
7	Mortarium, Rhodian(?)	2097	207	Fabric: light reddish brown (5YR 6/4), hard, with small dark and minute white grits; self slip
8	Mortarium	2110/2	228	Fabric: very pale yellow (2.5Y 7/4), gritty, hard, with some small dark and brown grits; self slip
9	Mortarium(?)	2117/3	230	Fabric: strong brown (7.5YR 5/6), rather hard, with small dark and minute white grits and silvery mica; self slip
10	Lekanis	2050/1	214	Fabric: reddish yellow (7.5YR 7/6), gray core, hard, with some minute dark and red grits and quartz; self slip
11	Lekanis	1082/3	109	Fabric: reddish yellow (5YR 7/6), hard and gritty, with some minute white and red grits and quartz; self slip

one. These vessels are similar to Guz-Zilberstein's Type BL18b from Tel Dor, generally dated to the fourth–third centuries BCE (Guz-Zilberstein 1995:295–296, Fig. 6.10:5–10). Similarly shaped vessels were reported from Kition, in layers from the end of the fourth and beginning of the third centuries BCE (Salles 1983:73–74, Fig. 28:245; 1993:189, 267–268, Figs. 200:239; 230:521; 232:521), and at Giv'at Yasaf/Tell er-Ras (Rochman-Halperin 1999:107, Fig. 23:11), Tel Kisan and Tel Kinnieh (Briend 1980:108, 114, Pls. 12:7; 17:14), Bet She'an/Nysa-Scythopolis (Johnson 2006:530, Fig. 15.2:38), Samaria/Sebaste (Kenyon 1957:228, Fig. 40:4) and Yafo (Jakoel and Gendelman 2017:61*, Fig. 19:12; Tsuf 2018: Fig. 9.17:336–339).

Mortarium with Arched Rim (Fig. 4:8).— Only a single parallel, from Tel Mikhal, dated to the Persian period (Kapitaikin 2006:23–27, Fig. 2:10), was found for this vessel, which generally resembles mortaria of the Late Roman period.

Mortarium/Coarse Bowl with Wide Ring Base and Curved Flange below Up-Turned Lip (Fig. 4:9).— This imported vessel is made of a micaceous fabric. Similarly shaped vessels

were reported from Tel Kisan, in layers dated to the seventh–sixth centuries BCE (Salles 1980: Pl. 31:1), and from Samaria/Sebaste (Reisner, Fisher and Lyon 1924:292, Fig. 169:17a).

Deep Lekanis with Wide Shelf Rim (Fig. 4:10).— No parallel can be mentioned for this vessel.

Deep Lekanis with Wide Out-Turned Grooved Rim (Fig. 4:11).— This vessel is made of a reddish yellow fabric, resembling that of local bag-shaped amphorae of the Early Roman period (see below). Similarly shaped vessels were reported from Hellenistic-period layers at Tel Yoqne'am (Avissar 1996:51, Fig. X.2:6) and Tell Qasile (Kletter 2006:121, Fig. 37:11).

Basin

Large and Deep Conical Basin with Thick Up-Turned Rim, Externally Underlined with Deep Groove (Fig. 5:1).— No parallel can be mentioned for this vessel.

Kraters

Footed-Column Krater with Wide Cylindrical Neck and Ledge Rim (Fig. 5:2–5).— This vessel is made of a coarse reddish yellow fabric. It is similar to a local type of krater, which has been documented in layers of the late Persian period (late fifth–fourth centuries BCE: Stern 2015:568–569) and continued to be produced throughout the Hellenistic period (Berlin 2015:635). Such vessels were also reported from Beirut (Sapin and Sayegh 1998:73–74, Fig. 29:85), Tel Kisan (Briend 1980:108, Pl. 12:4, 10), Tel Dor (Guz-Zilberstein 1995:297, Fig. 6.14:9–11, Type KR11a, dated to c. 175–125 BCE), Samaria/Sebaste (Kenyon 1957:234, Fig. 43:10), Tel Gezer (Gitin 1990:254, Pls. 37:22, 23; 47:9), Tel Ya'oz (Segal, Kletter and Ziffer 2006:6*, Fig. 8:1), Tel Maresha (Levine 2003:91, Fig. 6.4:63) and Yafo (Jakoel and Gendelman 2017:61*, Fig. 9:13; Gendelman, this volume: Fig. 2:2; in prep. [b]).

Jugs

Small Globular Jug with Funneled Grooved Rim and High-Curved Handle Connected to Inner Rim (Fig. 5:6, 7).— Vessels of similar shape and fabric were reported from Samaria/Sebaste (Kenyon 1957: Fig. 58:10) and 'Akko (Smithline 2013:92–94, Fig. 11:1, 2). Smithline (2013) suggested a North Egyptian origin for this type of jug from 'Akko, although there is limited evidence to support his conclusion. The Egyptian vessels to which Smithline referred were produced in both Lower and Upper Egypt (cf. Berlin 2001:39, Fig. 2.38:10), and were made of a different type of clay than that of the vessels from Samaria/Sebaste, 'Akko and Yafo (see above).

Flasks

Lentoid-Shaped Flask with Flaring Rim (Fig. 5:8–10).— This vessel is similar to Guz-Zilberstein's Type PF from Tel Dor, dated to the early Hellenistic period (Guz-Zilberstein

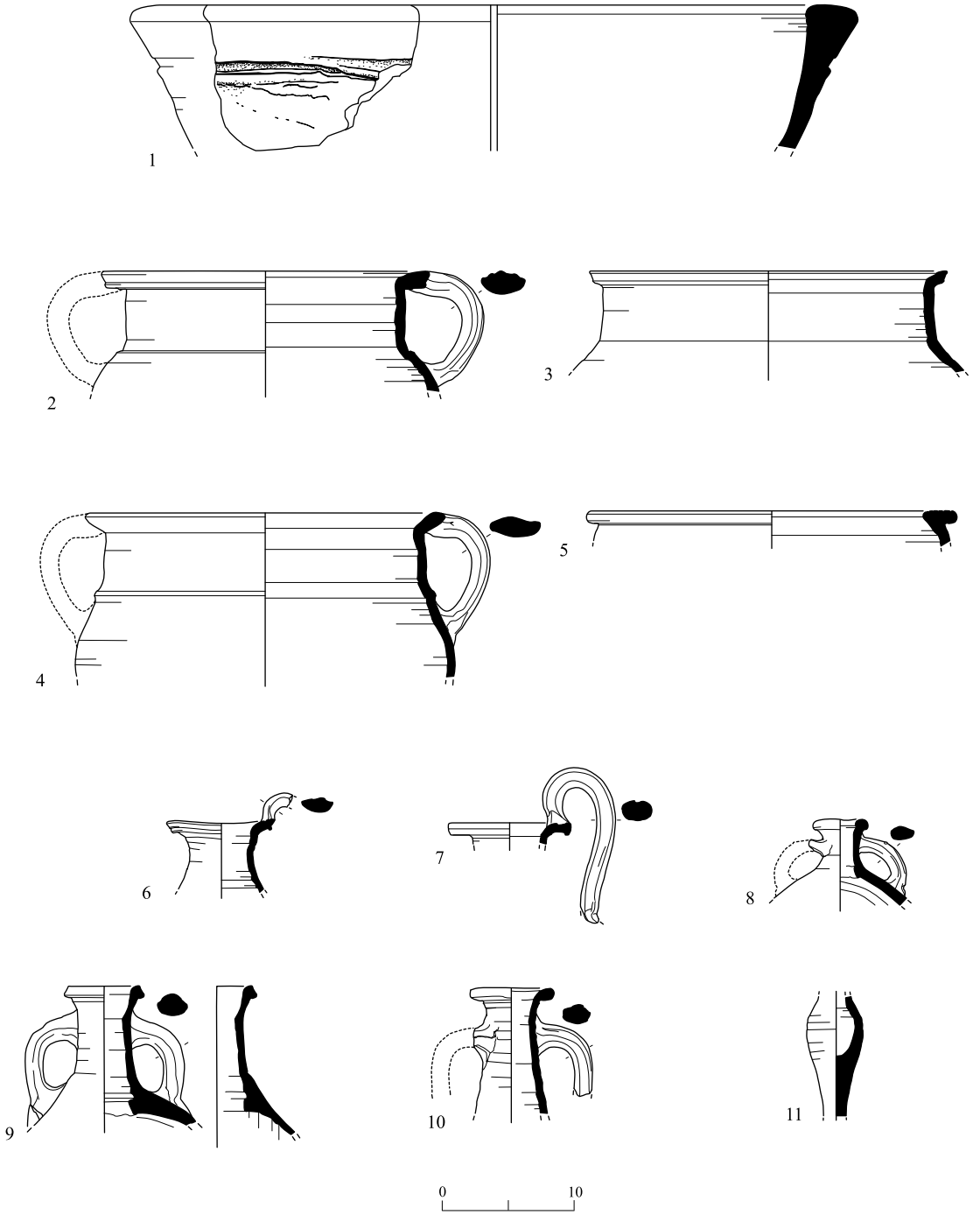

Fig. 5. Pottery from the Persian and Hellenistic periods: household wares (cont.).

1995:310–311, Fig. 6.34:1–3). Similar vessels, dated from the mid-sixth till the late fourth or early third century BCE, were reported from Samaria/Sebaste (Kenyon 1957:232, Fig. 42:4), Apollonia-Arsuf (Fisher and Tal 1999:239, Fig. 5.14:4; Tal 1999:157, Fig. 4.38:12),

◂ **Fig. 5**

No.	Type	Reg. No.	Locus	Description
1	Basin	2110/1	228	Fabric: reddish yellow (7.5YR 7/6), rough, with some minute dark and red grits and quartz; self slip
2	Krater	1120	134	Fabric: reddish yellow (7.5YR 7/6), rough, with some minute dark and red grits and quartz; self slip
3	Krater	2117	230	Fabric: reddish yellow (7.5YR 7/6), rough, with some minute dark and red grits and quartz; self slip
4	Krater	2037/1	205	Fabric: reddish yellow (7.5YR 7/6), rough, with some minute dark and red grits and quartz; self slip
5	Krater	2111	227	Fabric: reddish yellow (5YR 6/6), rough, with some minute dark and white grits; self slip
6	Table jug	1100/2	100	Fabric: reddish yellow (5YR 6/6), rather hard and gritty, with some minute white and red grits; self slip, salt whitening on ext.
7	Table jug	2117	230	Fabric: reddish yellow (7.5YR 6/6), rather hard, with some minute white and red grits; self slip
8	Pilgrim flask	1100/1	110	Fabric: reddish yellow (7.5YR 6/6), soft and sandy, with some minute white and quartz; self slip
9	Pilgrim flask	1028	129	Fabric: light red (2.5YR 6/6), gray core, hard, with many minute white and some red grits; self slip
10	Pilgrim flask	2004/3	204	Fabric: light red (2.5YR 6/6), gray core, hard, ext. fired to pink, with many minute white and some red grits; self slip
11	Unguentarium	2014/1	219	Fabric: reddish yellow (7.5YR 7/6), rough, with some minute dark and red grits and quartz; self slip

Tel Mikhal Stratum VI, dated to 350–300 BCE (Singer-Avitz 1989:135, Fig. 9.13:16), Tel Maresha (Levine 2003:100, Fig. 6.9:90) and Yafo (Tsuf 2018: Fig. 9.8:182–184).

Unguentarium

Fusiform Unguentarium with Disk-Shaped Foot (Fig. 5:11).— Similar vessels were reported from Tel Mikhal Stratum VI (350–300 BCE; Singer-Avitz 1989:135, Fig. 9.13:14), as well as from late fourth–first century BCE contexts at numerous Hellenistic-period sites in Israel, including Tel Kisan (Briend 1980:111, Pl. 14:16) and Bet She'an/Nysa-Scythopolis (Johnson 2006:536, Fig. 15.5:104–107).

Cooking Vessels

Cooking Pots

Globular Cooking Pot with Cylindrical Neck, Thickened, Rolled Rim and Oval Handles (Fig. 6:1).— Vessels of similar shape were reported from Tel Mevorakh, where they were dated to the fifth–fourth centuries BCE (Stern 1978:32–33, Fig. 5:14–17), and from a late fourth century BCE fortress at Naḥal Tut (Alexandre 2006:155, Fig. 62:7, 8).

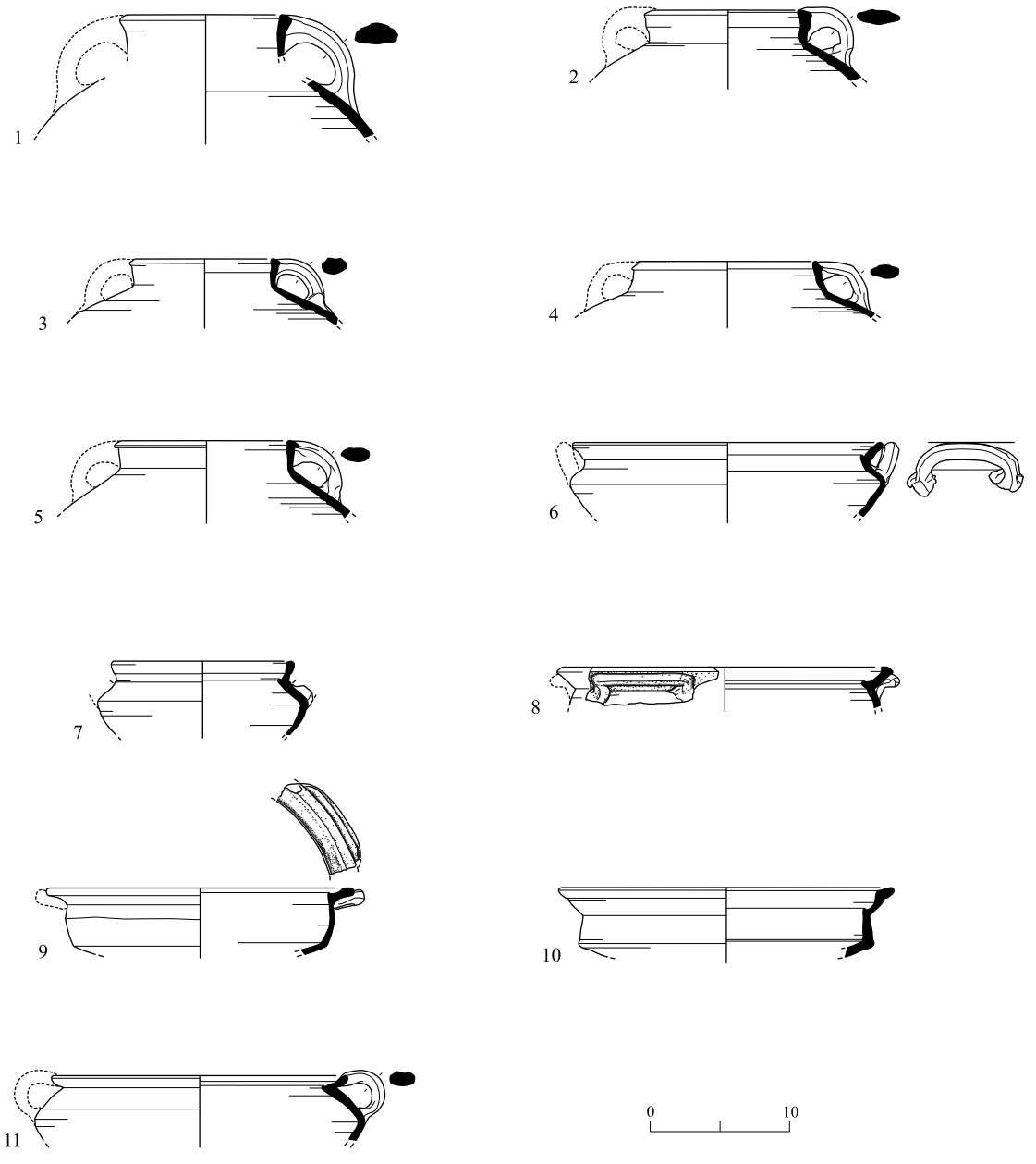

Fig. 6. Pottery from the Persian and Hellenistic periods: cooking wares.

Globular Cooking Pots with Flanged Rim (Fig. 6:2, 3).— This common type of Persian-period cooking pot is well-known from sites along the Mediterranean coast and inland parts of the region (cf. Singer-Avitz 1989:116, Figs. 9.1:3, 4; 9.2:4; Gitin 1990:236–237, 255–256, Pls. 31:13; 33:19, 20; Tal 1999:125, Fig. 4.23:1–5).

Globular Cooking Pot with Cylindrical Neck, Out-Curved Rim and Oval Handles (Fig. 6:4, 5).— This is the characteristic cooking pot of the end of the Persian and the early

◂ **Fig. 6**

No.	Reg. No.	Locus	Type	Description
1	1075	110	Cooking pot	Fabric: reddish brown (2.5YR 4/4), rough and gritty, with many medium white (lime) grits and quartz; soot on ext.
2	2077	233	Cooking pot	Fabric: reddish brown (5YR 5/4), rough and gritty, with some medium grayish grits and quartz; soot on ext.
3	1132	126	Cooking pot	Fabric: light red (2.5YR 6/6), rough and gritty, with some minute white grits and quartz; soot on ext.
4	1124	126	Cooking pot	Fabric: light red (2.5YR 6/6), rough and gritty, with some minute white grits and quartz; soot on ext.
5	2098/4	216	Cooking pot	Fabric: red (10YR 5/6), sandy and soft, with some minute white grits and quartz
6	1052, 1082	109, 122	Casserole	Fabric: reddish brown (5YR 5/4), gray core, rough and gritty, with some minute dark and red grits and quartz; soot on ext.
7	2130	254	Casserole	Fabric: red (10YR 5/6), sandy and soft, with some minute white grits and quartz
8	1082/2	109	Casserole	Fabric: reddish brown (2.5YR 4/4), rough and gritty, with some minute white (lime) grits and quartz; soot on ext.
9	2008	208	Casserole	Fabric: reddish brown (5YR 4/4), rough and soft, with some minute dark and red grits and quartz; soot on ext.
10	2118	230	Casserole	Fabric: reddish brown (5YR 4/4), rough and soft, with some minute dark and red grits and quartz; soot on ext.
11	1114	126	Casserole	Fabric: light red (2.5YR 6/6), rough and gritty, with some minute white and red grits and quartz; soot on ext.

Hellenistic periods, reported from numerous sites such as Tel Anafa (Berlin 1997:90, Pl. 20:178, 179), Tel Kisan (Briend 1980:107, Pl. 11:1, 2), Tel Bet Yeraḥ (Ben-Nahum and Getzov 2006:146, Fig. 5.11:6–10), Tel Yoqne'am (Avissar 1996:51, Fig. X.3:12), Naḥal Tut (a late fourth century BCE fortress; Alexandre 2006:155, Figs. 48:7; 53:5, 6), Tel Dor (Type CP3, dating from the second half of the fourth till the late second century BCE; Guz-Zilberstein 1995:299, Fig. 6.18:5–11), Samaria/Sebaste (Kenyon 1957:228, Fig. 41:4, 5) and Tel Gezer (Type 154A: Gitin 1990:236–237, Pl. 31:11, 12).

Casseroles

An open, wide carinated vessel, also known as a *lopas*, is the most common type of casserole in the East Mediterranean. *Lopadia* were produced in Greece from as early as the fourth century BCE (Thompson 1934:466, Figs. 52:C73; 121:C73, C75; Sparkes and Talcott 1970:227–228, Fig. 18:1970, Pl. 95:1970–1972). Rotroff classified this form of casserole as a middle group of Lopas Form 3, dated to 225–175 BCE (Rotroff 2006:180–182, Fig. 83:646–652). Similarly shaped vessels are known from the regions of Cilicia and North Syria (Jones 1950:170, Figs. 135:221; 187:221), Cyprus (fourth–third centuries BCE; Salles 1993:192, Fig. 203:270) and Egypt (third–second centuries BCE; Harlaut 2002:267–268, Figs. 4:b–d; 6:c, d). Two variants of these casseroles are present at the site.

Casserole with Globular Body and Wide, Out-Turned Rim, with Inner Ridge for Lid and Vertical Rod-Shaped Handles Attached from Mid-Body to Rim (Fig. 6:6, 7).— This commonly found type of casserole, generally dating from the late fourth till the late second century BCE, was reported from Tel Dor (Guz-Zilberstein 1995:299, Type CP5, Fig. 6.20:1, 14, 15), Tel Bet Yeraḥ (Ben-Nahum and Getzov 2006:143–144, Fig. 5.10:7, 8), ʻAkko (Berlin and Stone 2016: Fig. 9.19:10), Tel Yoqneʻam (Avissar 1996:54, Fig. X.4:3, Photo X.2) and Samaria/Sebaste (Kenyon 1957:230, Figs. 41:10; 43:14).

Wide, Barrel-Shaped Casseroles with Flaring Rim with Inner Lid Support and Pair of Horizontal Rod Handles from Mid-Body to Rim (Fig. 6:8–10).— Such vessels were reported from several sites of the late Persian and Hellenistic periods in Israel, such as Tel Anafa (second–third centuries BCE; Berlin 1997:34, Fig. 2.23:11), Tel Dor (Guz-Zilberstein 1995:300, Fig. 6.22:1, Type CP8, dating from the mid–late third century BCE), Samaria/Sebaste (Kenyon 1957:230, 235, Figs. 41:8, 9; 43:14), Apollonia-Arsuf (Fischer and Tal 1999:238, Fig. 5.13:3), Tel Mikhal (Persian period; Kapitaikin 2006:29–30, Fig. 5:8) and Yafo (Gendelman, in prep. [a]; in prep. [b]).

Wide Casserole with Low Globular Body, Ledge Rim with Internal Ridge and Vertical Strap Handles (Fig. 6:11).— Similar vessels, dating from the late fourth till the second century BCE, were found at Tel Kisan (Briend 1980:108, Pls. 11:9; 17:13), Tel Dor (Guz-Zilberstein 1995:299, Fig. 6.20:9, 13, Type CP5), Tel Bet Yeraḥ (Ben-Nahum and Getzov 2006:143–144, Fig. 5.10:10, 11) and Tel Ashdod (Kee 1971:61, Fig. 24:4, 7).

Containers

Local Amphorae

These vessels are made of two types of fabric: an early amphora of a coarse pink fabric, and late variations of a uniform, very pale brown sandy fabric.

Elongated Amphora with High Conical Shoulder, Conical Neck and Thick Folded Rim (Fig. 7:1).— Similar vessels, dated to the early Persian period, were reported from Tel Mevorakh (Stern 1978:34, Fig. 7:3), Tel Yoqneʻam (Cimadevilla 2005:417, Figs. IV.10:2, 3; IV.16:9, 10), Tel Mikhal (Singer-Avitz 1989:119, 122, Figs. 9.1:22; 9.3:2–6, Type 2, dated to 525–450 BCE) and Apollonia-Arsuf (Tal 1999:102, Figs. 4.13:10; 4.39:14, 15).

Sack-Shaped, Slender Amphora with Rounded Base and Thick Folded Externally-Flattened Rim (Fig. 7:2).— Similar vessels, dating between the sixth and fourth centuries BCE, are known from Tel Mikhal (Singer-Avitz 1989:119, 122, Figs. 9.1:22; 9.3:2–6), Apollonia-Arsuf (Tal 1999:102, Figs. 4.13:10; 4.39:14, 15) and Tel Mevorakh (Stern 1978:34, Fig. 7:3).

Sack-Shaped Amphora with High Cylindrical Neck and Out-Turned Splayed Rim (Fig. 7:3, 4).— Similar vessels, dated to the end of the Persian period, were reported from Tel Mikhal (Singer-Avitz 1989:124, Figs. 9.3:1; 9.4:1–3, 5, 6, 9, 12; 9.5:8; 9.6:1–4, 7; 9.12:6–10, Type 1, dated to 450–350 BCE; Kapitaikin 2006:30–31, Fig. 6:1, 8) and Yafo (Gendelman, in prep. a; in prep. b).

South Phoenician Amphorae

Carinated Shoulder Holemouth Amphora (Fig. 7:5).— This amphora is made of a hard pinkish fabric, characteristic of production centers in Tyre, South Phoenicia. It is similar to a variant of Bettles' Type A3 (Bettles 2003:108, Fig. 4.1:A3). Such amphorae were reported from 'Akko (Berlin and Stone 2016: Fig. 9.3:3–5) and Tel Dor (Guz-Zilberstein 1995:312, Fig. 6.38:2, 3, Type JR3a, dated to the fourth–third centuries BCE).

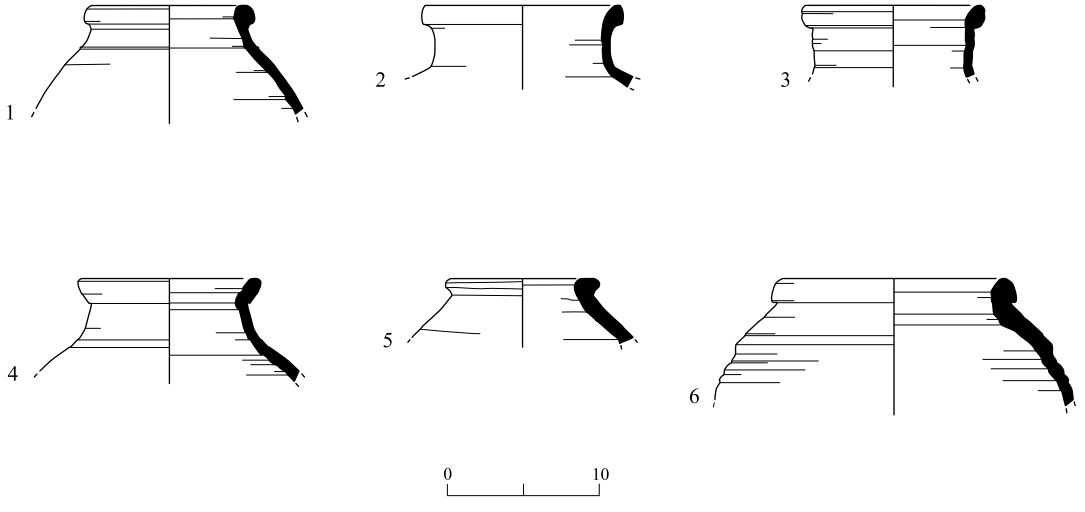

Fig. 7. Pottery from the Persian and Hellenistic periods: local and regional containers.

No.	Type	Reg. No.	Locus	Description
1	Local amphora	2116	232	Fabric: pink (7.5YR 7/4), hard and rough, with many minute white and brown pebbles; self slip
2	Local amphora	2077/1	228	Fabric: very pale brown (10YR 7/4), sandy and rough, with some minute white and brown grits; self slip
3	Local amphora	2004	204	Fabric: very pale brown (10YR 7/4), sandy and rough, with some minute white and brown grits; self slip
4	Local amphora	1116/1	134	Fabric: very pale brown (10YR 7/4), sandy and rough, with some minute white and brown grits; self slip
5	Phoenician amphora	2008/1	208	Fabric: reddish yellow (7.5YR 8/6), hard, with some white and red grits; self slip
6	Phoenician amphora	1000	100	Fabric: reddish yellow (7.5YR 8/6), hard, with some white and red grits; self slip

Rounded Shoulder Holemouth Amphora (Fig. 7:6).— This form, dated from the second to the early first century BCE, is widespread in South Phoenician sites, such as Sarepta (Khalifeh 1988: Pl. 28:SJ–20), Tyre (Bikai, Fulco and Marchand 1996: Fig. 87:1, 3, 4), ʻAkko (Berlin and Stone 2016: Figs. 9.19:3; 9.22:1, 2), Tel Anafa (Semi-Fine Baggy Jar Type: Berlin 1997:155–156, Pl. 57:480–483), Shiqmona (Elgavish 1974:56, Pls. X:211; XVII:235; XXIII:251, 252), Tel Kisan (Briend 1980:105, Pl. 7:8), Tel Dor (Type JR3c; Guz-Zilberstein 1995:312, Fig. 6.38:2, 3) and Strato's Tower, Caesarea (Berlin 1992:118, Fig. 54:4). It has also been reported from as far as Kition, Cyprus (Salles 1993: Fig. 233:553).

OIL LAMPS

Attic Imports

Attic Wheel-Made Lamp with Solid Base, Flat Rim and Partly-Preserved Vertical Band Handle Attached to Mid-Body (Fig. 8:1).— This Attic-produced lamp is similar to Howland's Type 23C, dated to the first half of the fourth century BCE (Howland 1958:59–60, Pls. 8:228–230; 36:228–230). Such lamps were reported from Samaria/Sebaste (Crowfoot 1957a:367, Fig. 85:1) and Tel Mikhal (Kapitaikin 2006: Fig. 14:41, 42).

Attic Wheel-Made Lamp with Rounded Shoulder and Pierced Side Lug (Fig. 8:2).— This lamp is similar to Howland's Attic Type 32, dated to the mid–late third century BCE (Howland 1958:99–100, Pls. 15:425, 426; 41:425, 426). Such lamps were reported from Tel Dor (Rosenthal-Heginbottom 1995a:235–236, Fig. 5.14:9–11) and Samaria/Sebaste (Crowfoot 1957a:367, Fig. 85:5).

Attic Wheel-Made Lamp (Fig. 8:3, 4).— Two fragments of the lamp base belong to Howland's Attic Type 25A, dated to the mid-fourth till the early third centuries BCE (Howland 1958:67–69, Pls. 9:271, 272; 38:271, 272). Such lamps were reported from Tel Dor (Rosenthal-Heginbottom 1995a:234, Fig. 5.13:5) and Samaria-Sebaste (Crowfoot 1957a:365–367, Fig. 85:3).

Local/Regional Imitations of Attic Lamps

Wheel-Made Oil Lamp with Elongated Nozzle (Fig. 8:5, 6).— This locally made lamp is a common local imitation of Howland's Attic Type 25A (see Fig. 8:3, 4). It dates from the late Persian and Hellenistic periods (fourth–second centuries BCE), and has been reported from numerous sites in the region, e.g., Tel Dor (Rosenthal-Heginbottom 1995a:235, Fig. 5.13:9, 10; 5.14:1–8), Tel Kisan (Briend 1980:110, Pl. 14:1–3), Tel Mikhal (Kapitaikin 2006:40, Fig. 11:8–10), Apollonia-Arsuf (Tal 1999:161, Fig. 4.41:15, 16) and Yafo (Tsuf 2018: Fig. 9.68).

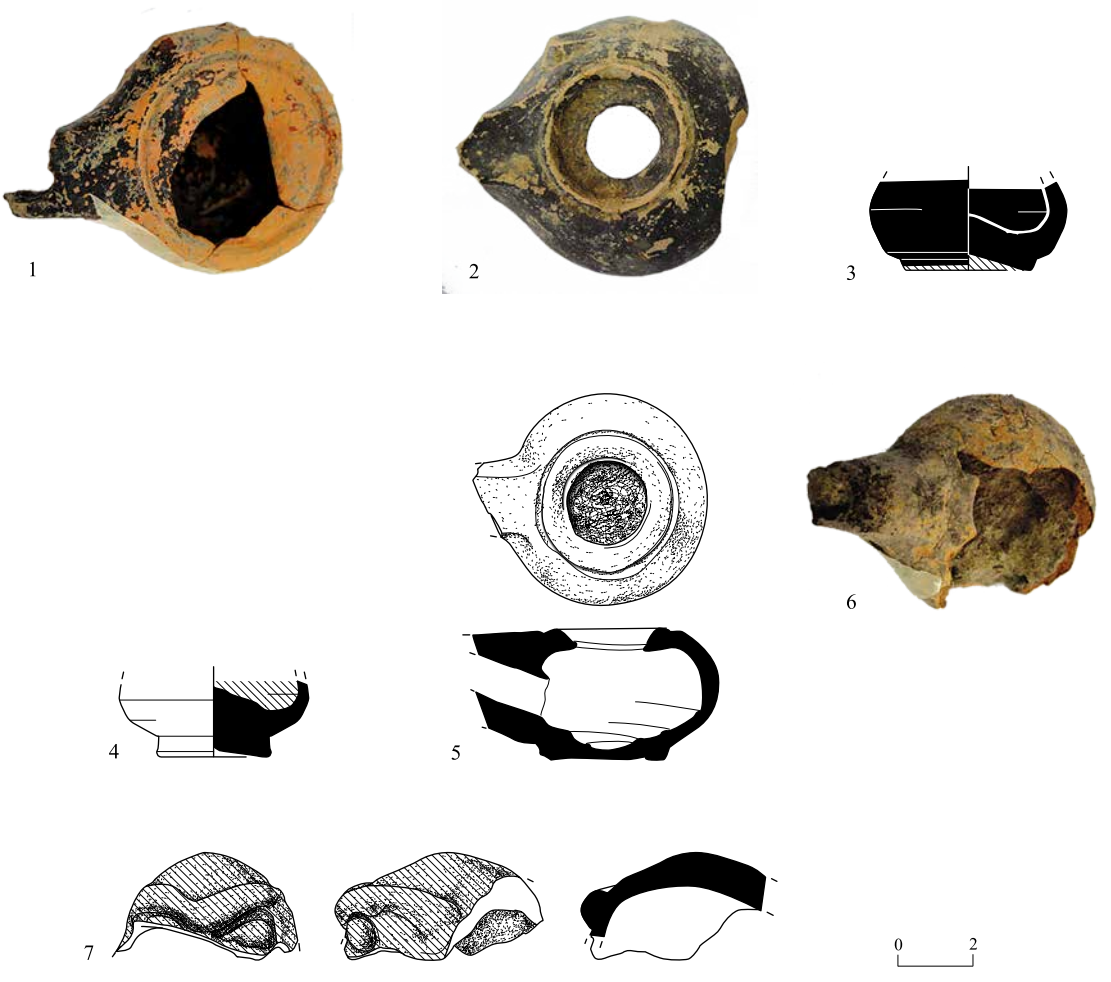

Fig. 8. Terracotta oil lamps and statuette from the Persian and Hellenistic periods.

No.	Type	Reg. No.	Locus	Description
1	Oil lamp, Attic	2081	223	Fabric: reddish yellow (5YR 7/8), hard, with some minute white grits and silvery mica; red to dark gray slip
2	Oil lamp, Attic	1175	111	Fabric: pink (7.5YR 8/4), hard, with some minute white grits; dark gray slip, matt
3	Oil lamp, Attic	2040/2	212	Fabric: pink (7.5YR 8/4), hard, with some minute white grits; slipped dark gray to red on base, matt
4	Oil lamp, Attic	2004/2	204	Fabric: pink (7.5YR 8/4), hard; dark gray to red slip, matt
5	Oil lamp, local/regional	2028	206	Fabric: reddish yellow (7.5YR 7/8), ext. fired to light pink, hard, with some minute white and dark grits
6	Oil lamp, local/regional	2090	116	Fabric: pink (7.5YR 8/4), rather soft, with some minute white and red grits
7	Terracotta statuette	1113/1	126	Fabric: white (10YR 8/2), soft and sandy, with some minute white grits; thin red slip/wash on ext.

TERRACOTTA FIGURINE

Terracotta Statuette of Bald Crown with Protruding Eyebrows on Forehead, Left Protruding Eye and Socket of Right Eye (Fig. 8:7).— This poorly-preserved statuette is made from soft whitish clay in a rather worn mold, and is covered with red wash; originally, it may have been as high as 0.34 m. Two possible parallels for this statuette, both from Tel Dor, are suggested, one of a "grotesque head" (Rosenthal-Heginbottom 1995c:455, Fig. 7.8:5), and another of a "Silenus mask"— estimated to be of an early Hellenistic date (Erlich 2010:132–133, Fig. 75). A different interpretation is proposed here for the statuette from the present excavation, and the two from Tel Dor. The three examples resemble a number of terracotta statuettes of the "parasite" character, which Bieber (1961:99–101, Figs. 375–377) associated with Menander's lost comedy *Kolax*, also known as "The Flatterer."

THE ROMAN PERIOD

Cypriot Sigillata (CS) Bowl

Hemispherical Bowl with Rounded Rim (Fig. 9:1).— This bowl is similar to Hayes' Atlante CS Form P29, dated to the first half of the second century CE (Hayes 1985:86, Pl. XX:9). Such bowls were found at Benghazi/Berenice (Kenrick 1985:269–270, Fig. 49:B383), Paphos (Hayes 1991:44, Fig. 19:29) and Marina el-Alamein (Daszewski 1995:29, Pls. 1:3–5; 6:4).

Cooking Pot

Wide-Mouthed Cooking Pot/Casserole with Out-Curved In-Folded Rim with Internal Groove for a Lid (Fig. 9:2).— Such vessels were recorded at Caesarea Maritima, in a layer dated approximately to the first half of the second century CE (Riley 1975:43, 48, No. 113), and at nearby sites (Calderon 2000:95, Pl. III:50; Silberstein 2000:435, Pl. VI:14). Similar vessels were reported from Masada, dating from the Zealot occupation of 66–73/74 CE (Bar-Nathan 2006:167–168, Fig. 53, Pl. 30:62–68).

Local Bag-Shaped Amphorae

Two fragments of local bag-shaped amphorae belong to two variants of this vessel type.

Bag-Shaped Amphora with Cylindrical Neck with a Ridge and Thickened Rim (Fig. 9:3).— Such vessels date to the late first century BCE–first century CE, and were reported from numerous sites in the region, such as Samaria/Sebaste (Hennessy 1970:20–21, Fig. 15), Masada (37/31 BCE–6 CE; Bar-Nathan 2006:167–168, Fig. 12:20, Pl. 4:19, 20) and Jerusalem (Geva and Rosenthal-Heginbottom 2003:177–178, Pls. 6.9:1–3; 6.10:4).

Bag-Shaped Amphora with Cylindrical Neck and Protruding Ridge below Pointed Rim (Fig. 9:4).— Parallels for this vessel date from the late first till the first third of the second

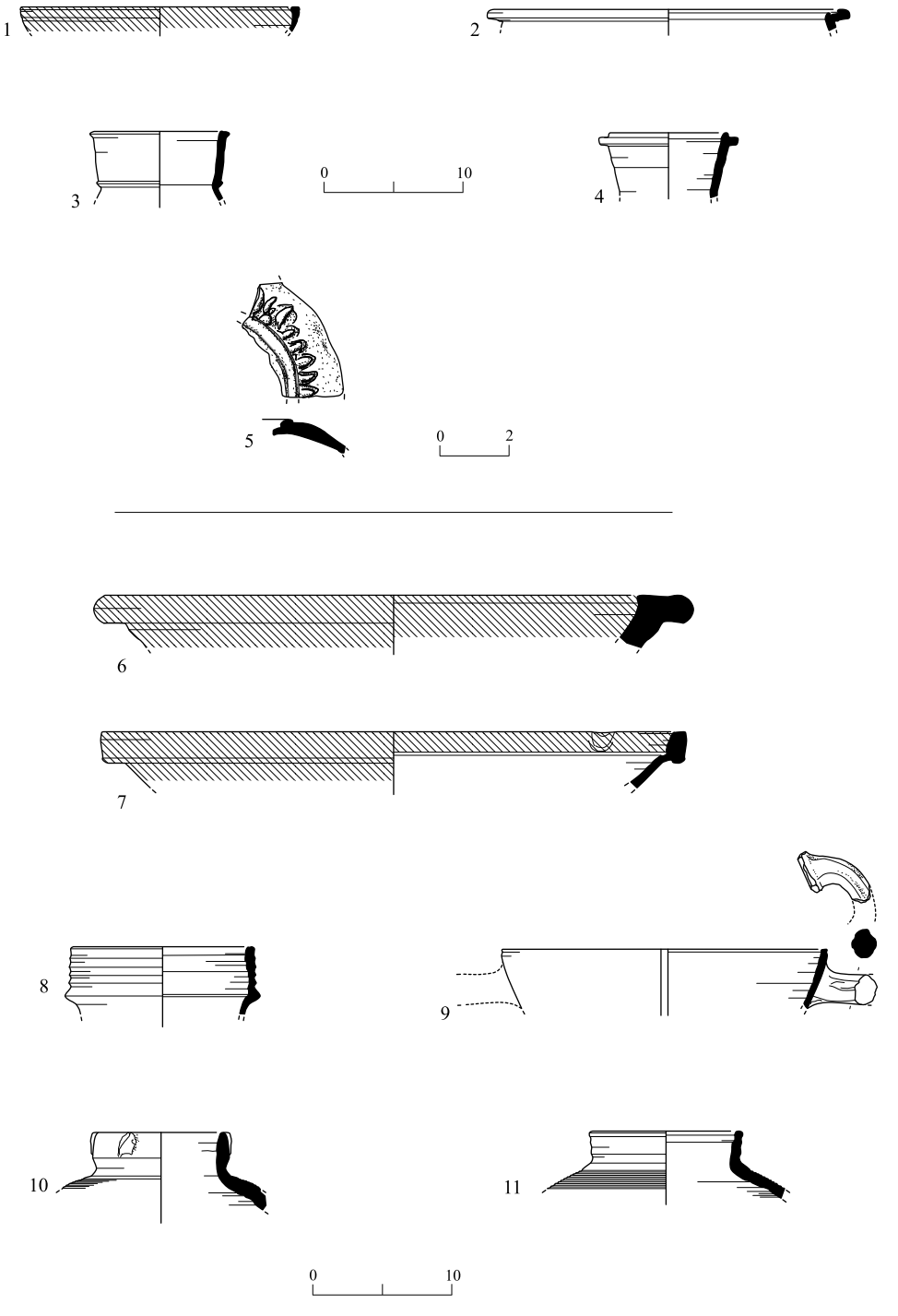

Fig. 9. Pottery vessels and terracotta oil lamp from the Roman and Byzantine periods.

◂ **Fig. 9**

No.	Type	Reg. No.	Locus	Description
1	CS bowl	2002/2	202	Fabric: light red (2.5YR 6/8); slip red (2.5YR 5/6); polished
2	Cooking pot	1037/2	117	Fabric: brown (7.5YR 4/4), rough and soft, with some minute dark grits and quartz
3	Bag-shaped amphora	2002/1	202	Fabric: reddish yellow (7.5YR 8/6), hard and rough, with many minute white and brown grits; self slip
4	Bag-shaped jar	1037	117	Fabric: light red (2.5YR 6/6), rough and gritty, with some minute white grits and quartz
5	Oil lamp	2067	222	Fabric: reddish yellow (5YR 7/6), hard, with some minute white grits and silvery mica; slipped red on ext.
6	Mortarium, North Syrian	2035	210	Fabric: reddish brown (5YR 5/3), rough, with some minute dark and white grits and black pebbles (basalt?); self slip
7	Mortarium, North Syrian	2036	211	Fabric: reddish brown (5YR 5/3), rough, with some minute dark and white grits and black pebbles (basalt?); self slip
8	Antilia pot	2035/1	210	Fabric: reddish yellow (5YR 7/6), hard and gritty, with some minute white grits and quartz; self slip
9	Casserole	2001	201	Fabric: reddish brown (2.5YR 4/4), rough and gritty, with some minute white (lime) grits and quartz
10	Bag-shaped amphora	2000	200	Fabric: reddish yellow (5YR 7/6), sandy and rough, with some minute white grits and quartz; self slip
11	Bag-shaped amphora	2044	210	Fabric: reddish yellow (5YR 7/6), sandy and rough, with some minute white grits and quartz; self slip

century CE, and are known from Yafo (Kaplan 1964: Fig. 2:5), ‘Abud Cave (Zissu et al. 2009:490–491, Pl. 2:9–12), Ben Shemen (Peilstöcker 2003: Fig. 78:8) and Har Yishai Cave (Porat, Eshel and Frumkin 2009: Pl. 2:5).

Provincial Discus Oil Lamp

Mold-Made Discus Lamp with Ovolo and Double Axe (Labrys) Decoration on Shoulder (Fig. 9:5).— Such lamps date from the late first till the second century CE (Rosenthal and Sivan 1978:88–89, Nos. 357, 358; Rosenthal-Heginbottom 1995b:245).

THE BYZANTINE PERIOD

North Syrian Mortaria

North Syrian Mortarium with Massive Ledge Rim (Fig. 9:6).— This vessel is made of the distinctive brown fabric of mortaria produced in north Syria. Such mortaria seem to be a transitional variant, between the “classical” shape with a wide-arched rim (cf. Hayes 1967) and the later form of the fifth–seventh centuries CE (see Fig. 9:7), dated between the late fourth or early fifth and the sixth–early seventh centuries CE (for a late example of this type, see Koucky and Lapp 1989:107–108, Pl. 49:12).

Late Type of North Syrian Mortarium with Square Rim (Fig. 9:7).— Such vessels were common from the late fifth to the seventh century CE (cf. Riley 1975:37, Nos. 41, 42; Koucky and Lapp 1989:107–108, Pl. 49:10, 12; Calderon 2000:147, Pl. XXV:78).

Antilia (Saqiya) Pot

Antilia Pot with Ridged Cupped Neck (Fig. 9:8).— This vessel is similar to Ayalon's Type 3, generally dated from the fifth till the early seventh century CE (Ayalon 2000:223, Fig. 3:4).

Casserole

Beveled Rim Casserole with Twisted Vertical Handles (Fig. 9:9).— These common vessels, which do not show morphological changes through time, date from the late fourth or early fifth till the eighth century CE (Riley 1975:35, Nos. 26–28; Koucky and Lapp 1989:110, Pls. 51:5, 6; 53:13, 17; Calderon 2000:140, Pl. XXIII:49).

Local Bag-Shaped Amphora

Local Bag-Shaped Jars with Pointed Rims (Fig. 9:10, 11).— These vessels are similar to Riley's Type 1C, dated to the sixth century CE (Riley 1975:27, No. 3). They are common in Caesarea Maritima (Blakely 1987:140–141, Figs. 37:121, 128; 39:150, 152; 42:185, 186, 192) and Ḥorbat 'Aqav (Calderon 2000:131–132, Fig. 22, Pl. XVIII:19). Similarly-shaped vessels were found at Pella, Jordan (McNicoll, Smith and Hennessy 1982:179–180, Pl. 115:5), and Ras Abu Ma'aruf (Rapuano 1999:179, Fig. 7:95), where they were dated to the late sixth or early seventh till the eighth century CE.

Conclusions

The 2014 excavation on Ben Gamli'el Street, Yafo, revealed pottery dated mainly between the late Iron Age and the Byzantine period, the majority belonging to the Persian and Hellenistic periods. Although these finds were not directly related to the architectural remains revealed at the site, they provide an opportunity to reexamine the material culture of Yafo's inhabitants during the late fifth/early fourth till the late second centuries BCE. These assemblages attest to a dominance of imported table wares, which originated mainly from workshops in other parts of the Levant and in Asia Minor, but also from Attica. These vessels, which in most cases provide reliable dates, are of the late fourth and early third centuries BCE. The Attic pottery of the fourth century BCE is relatively abundant and varied, similar to the situation observed at Tel Dor (Marchese 1995:171–172, Table 4.7). The BSP and ESA pottery, imported from north Syria or Cilicia (see Lund, Malfitana and Poblome 2006 for a discussion of the origin of ESA), provide the latest date for the Hellenistic assemblage, i.e., the second half of the second century BCE.

The presence of imported Cypriot/Aegean mortaria and of South Phoenician containers reinforces the existing evidence for the trade connections between Yafo and these regions; the city is also mentioned in the Eshumun'azar inscription as a Sidonian colony. These

regions provided Yafo with both food products, e.g., containers, and with pottery for food preparation, such as mortaria. The cooking ware are all locally produced and represent two different traditions: the globular pots of the Levantine tradition, and the open casseroles influenced by the Hellenic tradition (cf. Berlin 1997:95, n. 214). These finds reflect the role of Yafo as one of the major port cities in the region during the Persian and Hellenistic periods (cf. Notley 2011:95–101), and the highly Hellenized identity of its population.

The small amount of pottery of the Roman (first–early second centuries CE) and late Byzantine (sixth–seventh centuries CE) periods most probably reached the site accidently with later fills.

REFERENCES

Alexandre Y. 2006. Naḥal Tut (Site VIII): A Fortified Storage Depot from the Late Fourth Century BCE. *ʻAtiqot* 52:131–189.

Arbel Y. This volume. Building Remains from the Hellenistic, Byzantine and Late Ottoman Periods on 10 Ben Gamli'el Street, Yafo (Jaffa).

Avissar M. 1996. The Hellenistic and Early Roman Pottery. In A. Ben-Tor, M. Avissar and Y. Portugali. *Yoqneʻam* I: *The Late Periods* (Qedem Reports 3). Jerusalem. Pp. 48–59.

Ayalon E. 2000. Typology and Chronology of Water-Wheel (*Sāqiya*) Pottery Pots from Israel. *IEJ* 50:216–226.

Bachi G. 1971. Area D: The Finds. In M. Dothan. *Ashdod* II–III: *The Second and Third Seasons of Excavations 1963, 1965; Soundings in 1967. Text* (*ʻAtiqot* [*ES*] 9–10). Jerusalem. Pp. 94–113.

Bahat D. 1971. Area K. In M. Dothan. *Ashdod* II–III: *The Second and Third Seasons of Excavations 1963, 1965; Soundings in 1967. Text* (*ʻAtiqot* [*ES*] 9–10). Jerusalem. Pp. 168–180.

Barako T.J. 2008. Amphoras through the Ages. In L.E. Stager, J.D. Schloen and D.M. Master eds. *Ashkelon* 1: *Introduction and Overview (1985–2006)*. Winona Lake. Pp. 429–461.

Bar-Nathan R. 2006. *Masada* VII: *The Yigael Yadin Excavations 1963–1965, Final Reports. The Pottery of Masada*. Jerusalem.

Ben-Nahum H. and Getzov N. 2006. Stratum I—The Hellenistic Period. In N. Getzov. *The Bet Yeraḥ Excavations, 1994–1995* (IAA Reports 28). Jerusalem. Pp. 133–155.

Ben-Shlomo D. 2005. Material Culture. In M. Dothan and D. Ben-Shlomo. *Ashdod* VI: *The Excavations of Areas H and K (1968–1969)* (IAA Reports 24). Jerusalem. Pp. 63–246.

Berlin A.M. 1992. Hellenistic and Roman Pottery, Preliminary Report, 1990. In R.L. Vann ed. *Caesarea Papers: Straton's Tower, Herod's Harbour, and Roman and Byzantine Caesarea* (*JRA* Suppl. S. 5). Ann Arbor. Pp. 112–128.

Berlin A.M. 1997. The Plain Wares. In S.C. Herbert ed. *Tel Anafa* II, i: *The Hellenistic and Roman Pottery* (*JRA* Suppl. S. 10). Ann Arbor. Pp. ix–xiv, 1–244.

Berlin A.M. 2001. Naukratis/Kom Hadid: A Ceramic Typology for Hellenistic Lower Egypt. In A. Leonard Jr. *Ancient Naukratis. Excavations at a Greek Emporium in Egypt* II: *The Excavations at Kom Hadid* (AASOR 55). Boston. Pp. 26–163.

Berlin A.M. 2015. Hellenistic Period. In S. Gitin ed. *The Ancient Pottery of Israel and Its Neighbors from the Iron Age through the Hellenistic Period* 2. Jerusalem. Pp. 629–671.

Berlin A.M. and Stone P.J. 2016. The Hellenistic and Early Roman Pottery. In M. Hartal, D. Syon, E. Stern and A. Tatcher. *'Akko* II: *The 1991–1998 Excavations; The Early Periods* (IAA Reports 60). Jerusalem. Pp. 133–202.

Bettles E.A. 2003. *Phoenician Amphora Production and Distribution in the Southern Levant: A Multi-Disciplinary Investigation into Carinated-Shoulder Amphorae of the Persian Period (539–332 BC)* (BAR Int. S. 1183). Oxford.

Bieber M. 1961. *The History of the Greek and Roman Theater* (2nd ed.). Princeton.

Bikai P.M., Fulco W.J. and Marchand J. 1996. *Tyre: The Shrine of Apollo*. Amman.

Blakely J.A. 1987. *The Pottery and Dating of Vault 1: Horreum, Mithraeum and Later Uses* (ASOR; The Joint Expedition to Caesarea Maritima Excavation Reports IV). Lewiston, N.Y.

Blakely J.A. and Bennett W.J. Jr. 1989. The Levantine Mortaria of the Persian Period. In J.A. Blakely and W.J. Bennett Jr. eds. *Analysis and Publication of Ceramics: The Computer Data-Base in Archaeology* (BAR Int. S. 551). Oxford. Pp. 45–65.

Briend J. 1980. Vestiges hellénistiques. In J. Briend and J.-B. Humbert eds. *Tell Keisan (1971–1976): Une cité phénicienne en Galillée* (OBO.SA 1). Fribourg. Pp. 101–116.

Calderon R. 2000. Roman and Byzantine Pottery. In Y. Hirschfeld. *Ramat Hanadiv Excavations: Final Report of the 1984–1998 Seasons.* Jerusalem. Pp. 91–165.

Cimadevilla M. 2005. The Persian Period. In A. Ben-Tor, A. Zarzecki-Peleg and S. Cohen-Anidjar. *Yoqne'am* II: *The Iron Age and the Persian Period; Final Report of the Archaeological Excavations (1977–1988)* (Qedem Reports 6). Jerusalem. Pp. 401–421.

Cohen R. and Bernick-Greenberg H. 2007. *Excavations at Kadesh Barnea (Tell el-Qudeirat) 1976–1982* 2: *Plates, Plans and Sections* (IAA Reports 34/2). Jerusalem.

Crowfoot G.M. 1957a. Lamps, and an Early Stone Lamp Holder. In J.W. Crowfoot, G.M. Crowfoot and K.M. Kenyon. *Samaria-Sebaste* III: *The Objects from Samaria*. London. Pp. 365–378.

Crowfoot G.M. 1957b. Terra Sigillata General List. In J.W. Crowfoot, G.M. Crowfoot and K.M. Kenyon. *Samaria-Sebaste* III: *The Objects from Samaria*. London. Pp. 306–357.

Daszewski W.A. 1995. Cypriot Sigillata in Marina el-Alamein. In H. Meyza and J. Młynarczyk eds. *Hellenistic and Roman Pottery in the Eastern Mediterranean—Advances in Scientific Studies (Acts of the II Nieborów Pottery Workshop Nieborów, 18–20 December 1993)*. Warsaw. Pp. 27–39.

Dothan M. and Freedman D.N. 1967. *Ashdod I: The First Season of Excavations 1962* (*'Atiqot* [*ES*] 7). Jerusalem.

Élaigne S. 2007. Les importation de céramiques fines hellénistiques à Beyrouth (site BEY 002): Aperçu du faciès nord levantin. *Syria* 84:107–142.

Elgavish J. 1974. *Archaeological Excavations at Shikmona Field Report* 2: *The Level of the Hellenistic Period—Stratum H; Seasons 1963–1970*. Haifa (Hebrew).

Erlich A. 2010. Figurines, Sculpture and Minor Art of the Hellenistic and Roman Periods. In E. Stern. *Excavations at Tel Dor: Figurines, Cult Object and Amulets, 1980–2000 Seasons*. Jerusalem. Pp. 115–209.

Fantalkin A. 2001. Meẓad Ḥashavyahu: Its Material Culture and Historical Background. *Tel Aviv* 28:1–165.

Fischer M. 1989. Hellenistic Pottery (Strata V–III). In Z. Herzog, G. Rapp Jr. and O. Negbi eds. *Excavation at Tel Michal, Israel* (Tel Aviv University Institute of Archaeology Monograph Series 8). Minneapolis–Tel Aviv. Pp. 177–187.

Fischer M. and Tal O. 1999. The Hellenistic Period. In I. Roll and O. Tal. *Apollonia-Arsuf; Final Report of the Excavations* I: *The Persian and Hellenistic Periods* (Tel Aviv University Institute of Archaeology Monograph Series 16). Tel Aviv. Pp. 223–261.

Gendelman P. This volume. Hellenistic- and Early Roman-Period Pottery from Rabbi Yehuda Me-Rarguza Street, Yafo (Jaffa).

Gendelman P. In preparation (a). Persian and Hellenistic Pottery from Ruslan and Mifraẓ Shelomo Streets in Jaffa. *ʻAtiqot*.

Gendelman P. In preparation (b). Pottery and Other Finds from the Late Bronze Age, Persian, Hellenistic and Byzantine Periods at the French Hospital Compound, Yafo (Jaffa).

Gendelman P. and Jakoel E. 2017. Ceramics from the Postal Compound Excavations, 2009–2011. In A.A. Burke, K.S. Burke and M. Peilstöcker eds. *The History and Archaeology of Jaffa* 2 (The Jaffa Cultural Heritage Project Series 2; Monumenta archaeologica 41). Los Angeles. Pp. 301–311.

Geva H. and Rosenthal-Heginbottom R. 2003. Local Pottery from Area A. In H. Geva. *Jewish Quarter Excavations in the Old City of Jerusalem Conducted by Nahman Avigad, 1969–1982* II: *The Finds from Areas A, W and X-2; Final Report*. Jerusalem. Pp. 176–191.

Gitin S. 1990. *Gezer* III: *A Ceramic Typology of the Late Iron II, Persian and Hellenistic Periods at Tell Gezer* (ANGSBA III) (2 vols.). Jerusalem.

Gorzalczany A. 2003. A Hellenistic Site on Shay ʻAgnon Street, Ramat Aviv. *ʻAtiqot* 44:5*–11* (Hebrew; English summary, pp. 273–274).

Greenhut Z. and De Groot A. 2009. *Salvage Excavations at Tel Moẓa: The Bronze and Iron Age Settlements and Later Occupations* (IAA Reports 39). Jerusalem.

Guz-Zilberstein B. 1995. The Typology of the Hellenistic Coarse Ware and Selected Loci of the Hellenistic and Roman Periods. In E. Stern ed. *Excavations at Dor; Final Report* I, B: *Areas A and C. The Finds* (Qedem Reports 2). Jerusalem. Pp. 289–433.

Harlaut C. 2002. Productions céramiques égyptiennes d'Alexandrie à l'époque ptolémaïque: Évolution des formes et des fabriques; Traditions locales et innovations. In F. Blondé, P. Ballet and J.-F. Salles eds. *Céramiques hellénistiques et romaines: Productions et diffusion en Méditerranée orientale (Chypre, Égypte et côte syro-palestinienne)* (TMO 35). Lyon. Pp. 263–287.

Hayes J.W. 1967. North Syrian Mortaria. *Hesperia* 36:337–347.

Hayes J.W. 1985. Sigillate Orientali. In *Atlante delle forme ceramiche* II: *Ceramica fine romana nel bacino mediterraneo (tardo ellenismo e primo impero)* (Enciclopedia dell'arte antica classica e orientale). Rome. Pp. 1–96.

Hayes J.W. 1991. *Paphos* III: *The Hellenistic and Roman Pottery*. Nicosia.

Hennessy J.B. 1970. Excavations at Samaria-Sebaste, 1968. *Levant* 2:1–21.

Howland R.H. 1958. *Greek Lamps and Their Survivals* (Athenian Agora IV). Princeton.

Jakoel E. and Gendelman P. 2017. The Pottery Finds. In E. Jakoel and J. Marcus. The Northeastern Fringes of Yafo (Jaffa) in Light of the Excavations on Jerusalem Boulevard and Its Vicinity. *'Atiqot* 88:59*–64* (Hebrew; English summary, pp. 157–158).

Johnson B.L. 2006. The Hellenistic to Early Islamic Period Pottery. In A. Mazar. *Excavations at Tel Beth-Shean 1989–1996* I: *From the Late Bronze Age IIB to the Medieval Period* (The Beth-Shean Valley Archaeological Project 1). Jerusalem. Pp. 523–593.

Jones F.F. 1950. The Pottery. In H. Goldman ed. *Excavations at Gözlü Kule, Tarsus* I: *The Hellenistic and Roman Periods*. Princeton. Pp. 149–296.

Kapitaikin L.A. 2006. The Pottery from the IAA Excavations at Tel Mikhal (Tel Michal). *'Atiqot* 52:21–56.

Kaplan J. 1964. Two Groups of Pottery of the First Century A.D. from Jaffa and Its Vicinity. *Publications of the Museum of Antiquities of Tel Aviv–Jaffa* 1:3–19.

Kee H.C. 1971. The Pottery. In M. Dothan. *Ashdod* II–III: *The Second and Third Seasons of Excavations 1963, 1965; Soundings in 1967. Text* (*'Atiqot* [*ES*] 9–10). Jerusalem. Pp. 44–64.

Kenrick P.M. 1985. *Excavations at Sidi-Khrebish Benghazi (Berenice)* III, 1: *The Fine Pottery* (Supplements to Libya Antiqua V). Tripoli.

Kenyon K.M. 1957. Hellenistic Pottery. In J.W. Crowfoot, G.M. Crowfoot and Kenyon K.M. *Samaria-Sebaste* III: *The Objects of Samaria*. London. Pp. 217–281.

Khalifeh I.A. 1988. *Sarepta* II: *The Late Bronze and Iron Age Periods of Area II, X* (Publications de l'Université libanaise, Section des études archéologiques 2). Beirut.

Kletter R. 2006. A Middle Bronze Age II Site West of Tell Qasile. *'Atiqot* 53:65–128.

Koucky F.L. and Lapp E.C. 1989. The Artifacts. In R.H. Smith and L.P. Day eds. *Pella of the Decapolis* 2: *Final Report on the College of Wooster Excavation in Area IX, the Civic Complex, 1979–1985*. Wooster. Pp. 95–141.

Levine T. 2003. Pottery and Small Finds from Subterranean Complexes 21 and 70. In A. Kloner. *Maresha Excavations Final Report* I: *Subterranean Complexes 21, 44, 70* (IAA Reports 17). Jerusalem. Pp. 73–130.

Lund J., Malfitana D. and Poblome J. 2006. Rhosica vasa mandavi (Cicero, Att. 6.1.13); Towards the Identification of a Major Ceramic Tableware Industry of the Eastern Mediterranean: Eastern Sigillata A. *Archeologia Classica* 57:491–507.

Marchese R.T. 1989. Aegean and Cypriote Imports in the Persian Period (Strata XI–VI). In Z. Herzog, G. Rapp Jr. and O. Negbi eds. *Excavations at Tel Michal, Israel* (Tel Aviv University Institute of Archaeology Monograph Series 8). Minneapolis–Tel Aviv. Pp. 145–152.

Marchese R. 1995. Athenian Imports in the Persian Period. In E. Stern ed. *Excavations at Dor; Final Report* I, B: *Areas A and C. The Finds* (Qedem Reports 2). Jerusalem. Pp. 127–181.

Mazar A. and Panitz-Cohen N. 2001. *Timnah (Tel Batash)* II: *The Finds from the First Millennium BCE* (Qedem 42) (2 vols.). Jerusalem.

McNicoll A.W., Smith R.H. and Hennessy J.B. 1982. *Pella in Jordan* 1: *An Interim Report on the Joint University of Sydney and the College of Wooster Excavations at Pella 1979–1981* (2 vols.). Canberra.

Młynarczyk J. 2000. Pottery from the Hellenistic Cistern at Sha'ar Ha-Amakim. *Acts of the Fifth Scientific Conference on Hellenistic Pottery (Chania, Crete, April 1997)*. Athens. Pp. 225–235.

Młynarczyk J. 2002. Hellenistic Fine Wares at Tell Keisan: A Pattern of Importations. In F. Blondé, P. Ballet and J.-F. Salles eds. *Céramiques hellénistiques et romaines: Productions et diffusion en Méditerranée orientale (Chypre, Égypte et côte syro-palestinienne)* (TMO 35). Lyon. Pp. 117–132.

Nodet E. 1980. Le Niveau 3 (Période perse). In J. Briend and J.-B. Humbert eds. *Tell Keisan (1971–1976): Une cité phénicienne en Galillée* (OBO.SA 1). Fribourg. Pp. 117–129.

Notley R.S. 2011. Greco-Roman Jaffa and Its Historical Background. In M. Peilstöcker and A.A. Burke eds. *The History and Archaeology of Jaffa* 1 (The Jaffa Cultural Heritage Project Series 1; Monumenta archaeologica 26). Los Angeles. Pp. 95–107.

Peilstöcker M. 2003. Ben-Shemen Junction. *HA–ESI* 115:42*–43*.

Porat R., Eshel H. and Frumkin A. 2009. Finds from the Bar Kokhba Period from the Har Yishai Cave. In H. Eshel and R. Porat eds. *Refuge Caves of the Bar Kokhba Revolt* 2. Jerusalem. Pp. 197–214 (Hebrew).

Rapuano Y. 1999. The Hellenistic through Early Islamic Pottery from Ras Abu Ma'aruf (Pisgat Ze'ev East A). *'Atiqot* 38:171–203.

Reisner G.A., Fisher C.S. and Lyon D.G. 1924. *Harvard Excavations at Samaria 1908–1910* (2 vols.). Cambridge, Mass.

Riley J.A. 1975. The Pottery from the First Session of Excavation in the Caesarea Hippodrome. *BASOR* 218:25–63.

Rochman-Halperin A. 1999. Excavations at Giv'at Yasaf (Tell er-Ras) 1984–1985. *'Atiqot* 37:83–123 (Hebrew; English summary, p. 172*–173*).

Rosenthal R. and Sivan R. 1978. *Ancient Lamps in the Schloessinger Collection* (Qedem 8). Jerusalem.

Rosenthal-Heginbottom R. 1995a. Imported Hellenistic and Roman Pottery. In E. Stern ed. *Excavations at Dor; Final Report* I, B: *Areas A and C. The Finds* (Qedem Reports 2). Jerusalem. Pp. 183–288.

Rosenthal-Heginbottom R. 1995b. Lamps. In E. Stern ed. *Excavation at Dor; Final Report* I, B: *Areas A and C. The Finds* (Qedem Reports 2). Jerusalem. Pp. 234–249.

Rosenthal-Heginbottom R. 1995c. Terracottas from the Hellenistic Period. In E. Stern ed. *Excavations at Dor; Final Report* I, B: *Areas A and C. The Finds* (Qedem Reports 2). Jerusalem. Pp. 455–456.

Rosenthal-Heginbottom R. 2015. Hellenistic Period Imported Pottery. In S. Gitin ed. *The Ancient Pottery of Israel and Its Neighbors from the Iron Age through the Hellenistic Period* 2. Jerusalem. Pp. 673–708.

Rotroff S.I. 1997. *Hellenistic Pottery: Athenian and Imported Wheelmade Table Ware and Related Material* (Athenian Agora XXIX). Princeton.

Rotroff S.I. 2002. West Slope in the East. In F. Blondé, P. Ballet and J.-F. Salles eds. *Céramiques hellénistiques et romaines: Productions et diffusion en Méditerranée orientale (Chypre, Égypte et côte syro-palestinienne)* (TMO 35). Lyon. Pp. 97–115.

Rotroff S.I. 2006. *Hellenistic Pottery: The Plain Wares* (Athenian Agora XXXIII). Princeton.

Salles J.-F. 1980. Le Niveau 4. In J. Briend and J.-B. Humbert eds. *Tell Keisan (1971–1976): Une cité phénicienne en Galillée* (OBO.SA 1). Fribourg. Pp. 131–156.

Salles J.-F. 1983. *Kition-Bamboula* II: *Les égouts de la ville classique* (Mémoire 27). Paris.

Salles J.-F. 1993. *Kition-Bamboula* IV: *Les niveaux hellénistiques* (Mémoire 92). Paris.

Sapin J. and Sayegh H. 1998. La céramique commune. In J. Elayi and H. Sayegh. *Un quartier du port phénicien de Beyrouth au Fer III/Perse: Les objets* (Transeuphratène Suppl. 6). Paris. Pp. 53–110.

Segal O., Kletter R. and Ziffer I. 2006. A Persian-Period Building from Tel Ya'oz (Tell Ghaza). *'Atiqot* 52:1*–24* (Hebrew; English summary, p. 203*).

Silberstein N. 2000. Hellenistic and Roman Pottery. In Y. Hirschfeld. *Ramat Hanadiv Excavations: Final Report of the 1984–1998 Seasons*. Jerusalem. Pp. 420–469.

Singer-Avitz L. 1989. Local Pottery of the Persian Period (Strata XI–VI). In Z. Herzog, G. Rapp Jr. and O. Negbi eds. *Excavations at Tel Michal, Israel* (Tel Aviv University Institute of Archaeology Monograph Series 8). Minneapolis–Tel Aviv. Pp. 115–144.

Slane K.W. 1997. The Fine Ware. In S.C. Herbert ed. *Tel Anafa* II, i: *The Hellenistic and Roman Pottery* (*JRA* Suppl. S. 10). Ann Arbor. Pp. 247–393.

Smithline H. 2013. A Unique Hellenistic Pottery Assemblage from 'Akko. *'Atiqot* 76:71–103.

Sparkes B.A. and Talcott L. 1970. *Black and Plain Pottery of the 6th, 5th, and 4th Centuries B.C.* (Athenian Agora XII). Princeton.

Stern E. 1978. *Excavations at Tel Mevorakh (1973–1976)* I: *From the Iron Age to the Roman Period* (Qedem 9). Jerusalem.

Stern E. 1982. *Material Culture of the Land of the Bible in the Persian Period 538–332 B.C.* Warminster–Jerusalem.

Stern E. 1995. Local Pottery of the Persian Period. In E. Stern ed. *Excavations at Dor; Final Report* I, B: *Areas A and C. The Finds* (Qedem Reports 2). Jerusalem. Pp. 51–92.

Stern E. 2007. *En-Gedi Excavations* I: *Conducted by B. Mazar and I. Dunayevsky; Final Report (1961–1965)*. Jerusalem.

Stern E. 2015. Persian Period. In S. Gitin ed. *The Ancient Pottery of Israel and Its Neighbors from the Iron Age through the Hellenistic Period* 2. Jerusalem. Pp. 565–617.

Tal O. 1999. The Persian Period. In I. Roll and O. Tal. *Apollonia-Arsuf; Final Report of the Excavations* I: *The Persian and Hellenistic Periods* (Tel Aviv University Institute of Archaeology Monograph Series 16). Tel Aviv. Pp. 83–222.

Thompson H.A. 1934. Two Centuries of Hellenistic Pottery. *Hesperia* 3:311–480.

Tsuf O. 2018. *Ancient Jaffa During the Persian to the Byzantine Period: Kaplan Excavations (1955–1981)* (The Jaffa Cultural Heritage Project Series 3; Ägypten und Altes Testament 89). Münster.

Vitto F. 2005. Hellenistic and Crusader Remains at Montmusard, Acre (‘Akko). *‘Atiqot* 50:153–179.

Waagé F.O. 1948. Hellenistic and Roman Tableware of North Syria. In F.O. Waagé ed. *Antioch-on-the-Orontes* IV, 1: *Ceramics and Islamic Coins*. Princeton–London–The Hague. Pp. 1–60.

Zimhoni O. 1997. *Studies in the Iron Age Pottery of Israel: Typological, Archaeological and Chronological Aspects* (Journal of the Institute of Archaeology of Tel Aviv University, Occasional Publications 2). Tel Aviv.

Zissu B., Langford B., Porat R., Davidovich U. and Frumkin A. 2009. Finds from the Bar Kokhba Period from The Abud Cave. In H. Eshel and R. Porat eds. *Refuge Caves of the Bar Kokhba Revolt* 2. Jerusalem. Pp. 478–509.